EE2016-B- Fall 2021

數位系統導論

Fundamentals of Logic Design-Chapter 8: Combinational Circuit Design and Simulation Using Gates

Prof. E Ray Hsieh 謝易叡 助理教授

8.1 Review of Combinational Circuit Design

p229

- Logic circuits for digital systems may be combinational or sequential.
- A combinational circuit consists of logic gates whose outputs at any time are determined from only the present combination of inputs.

8.1 Review of Combinational Circuit Design

p229

- A combinational circuits
  - 2^n possible combinations of input values:

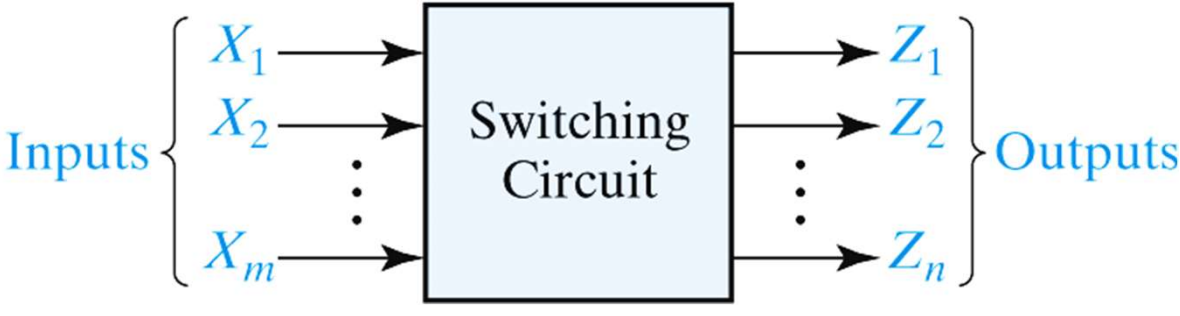

  - Specific functions
    - Adders, subtractors, comparators, decoders, encoders, and multiplexers

8.1 Review of Combinational Circuit Design

p230

- Analysis Procedure of Combinational Circuits
- **1st** : Set up a truth table. If the input variable never occurs at the circuit inputs, the output values are "**don't-cares.**"
- **2nd** : Use Karnaugh map to simplify the algebraic expression.
- **3rd** : The simplified expression are then manipulated into a proper form. (e.g.: NAND type, NOR type.)

8.1 Review of Combinational Circuit Design

p230

- Analysis Procedure of Combinational Circuits
- **4th** : When a circuit has two or more outputs, common terms in the output can often be used to reduce the total number of gates. (If each function is minimized separately, this does not always lead to a minimum multiple output circuit.)

  → Karnaugh maps can be used to find the common terms. (not necessary to be the prime implicants.)

8.2 Design of Circuits with Limited Gate Fan-in

p230

- The maximum number of inputs on each gate (**fan-in:扇入**) is limited, such as 2, 3, 4, 8, or others.

fan-in:扇入

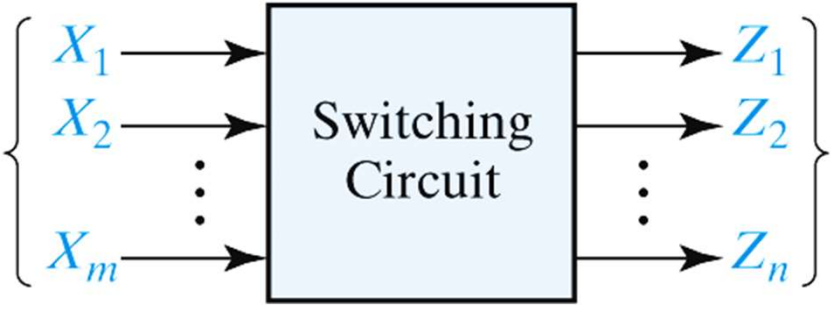

fan-out:扇出

- If a 2-level realization of a circuit requires more gate inputs than allowed, factoring the logic expression to obtain a multi-level realization is necessary.

8.2 Design of Circuits with Limited Gate Fan-in

p230

- E.g.1: Realize $f(a, b, c, d) = \Sigma m(0, 3, 4, 5, 8, 9, 10, 14, 15)$ using up to 3-input NOR gates.

$f = a'c'd' + a'bc' + ab'c' + ab'd' + abc + a'b'cd$

- A 2-level realization requires 1 four-input gates, 5 three-input gates and 6 five-input gate. (not conformed to the limitation of the question- up to 3 input NOR gates.)

$$f' = a'b'c'd + ab'cd + abc' + a'bc + a'cd'$$

cd \ ab	00	01	11	10
00	1	1	0	1
01	0	1	0	1
11	1	0	1	0
10	0	0	1	1

8.2 Design of Circuits with Limited Gate Fan-in

p231

$$f' = a'b'c'd + ab'cd + abc' + a'bc + a'cd'$$

$$f' = b'd(a'c' + ac) + a'c(b + d') + abc'$$

$$f = [b + d' + (a + c)(a' + c')][a + c' + b'd][a' + b' + c]$$

cd \ ab	00	01	11	10
00	1	1	0	1
01	0	1	0	1
11	1	0	1	0
10	0	0	1	1

(Review)7.7 Design of Multi-level NAND- and NOR- Gate Circuits

- e. g. $F_1 = [(a+b')c+d](e'+f)$ $F_2 = [(a+b')c+g'](e'+f)h$

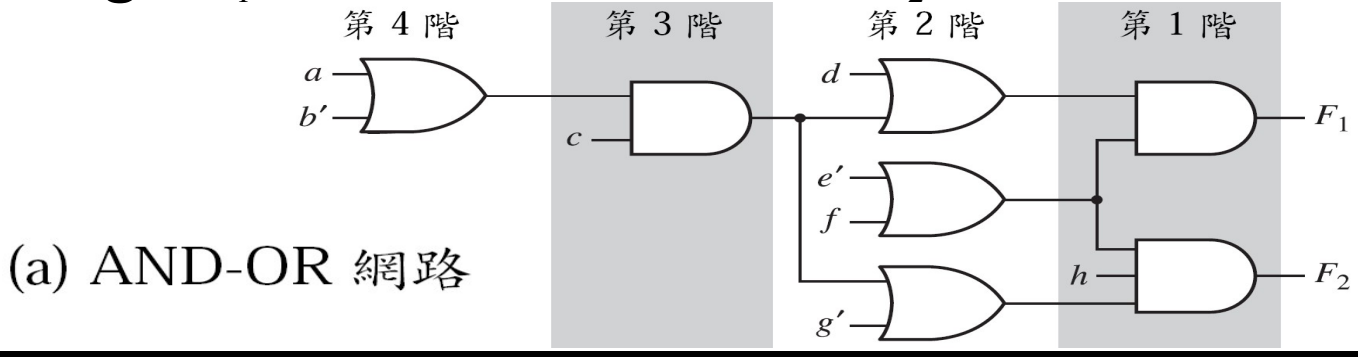

(a) AND-OR 網路

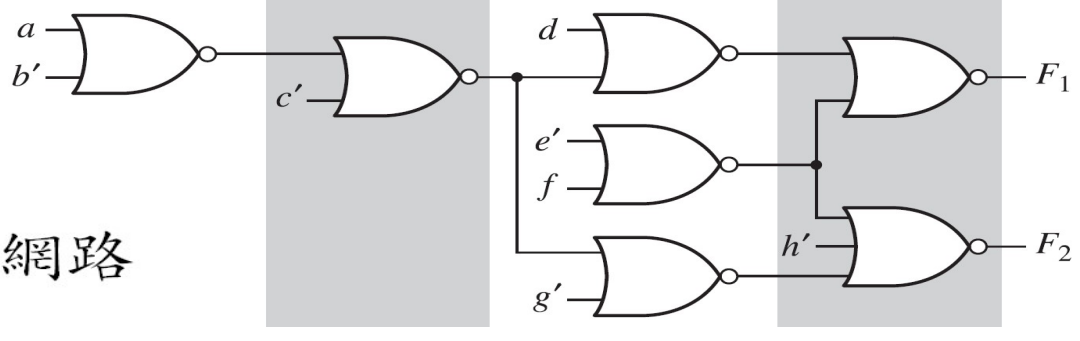

(b) NOR 網路

(Review)7.7 Design of Multi-level NAND- and NOR- Gate Circuits

- Procedure for designing a minimum multi-level NOR circuit:

1. Simplify the switching function to be realized.
2. Design a multi-level circuit of AND and OR gates. The output must be AND. AND-gate outputs cannot be used as AND-gate inputs; OR-gate outputs cannot be used as OR-gate inputs.
3. Number the levels starting with the output gate as lv. 1. Replace all gates with inputs to lv. 2, 4, 6,… unchanged. Inver any literals which appear as inputs to lv. 1, 3, 5…

8.2 Design of Circuits with Limited Gate Fan-in

p231

$$f = [b + d' + (a + c)(a' + c')][a + c' + b'd][a' + b' + c]$$

cd \ ab	00	01	11	10
00	1	1	0	1
01	0	1	0	1
11	1	0	1	0
10	0	0	1	1

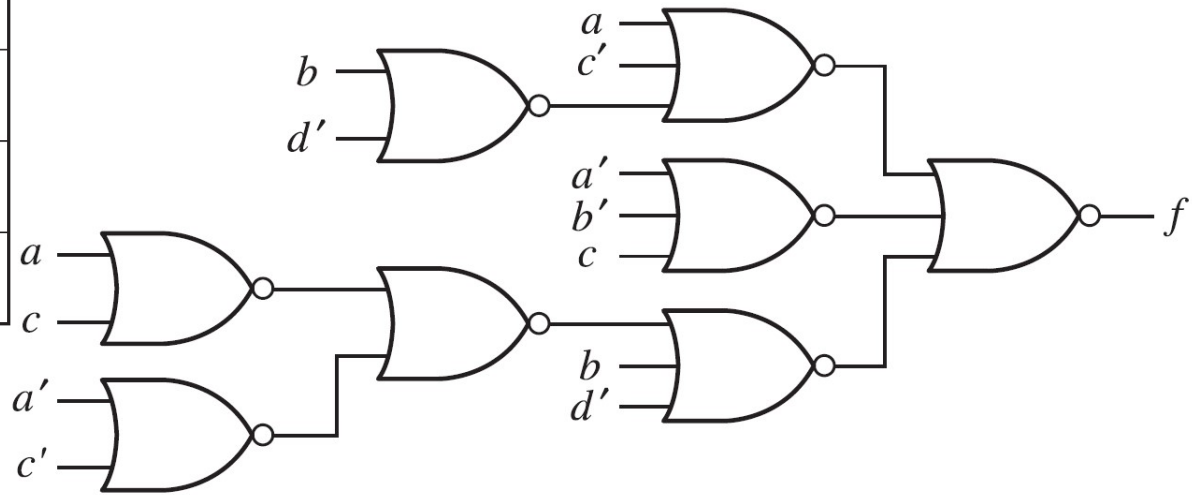

8 up-to 3-input NOR Gates

8.2 Design of Circuits with Limited Gate Fan-in

p231

- If the 2-level expressions had common terms, most of these common terms would be lost when the expression were factored.
- When designing multiple-output circuits with more than two levels, it is best to minimize each function separately.
- The resulting 2-level expressions must be factored to introduce common terms wherever possible.

8.2 Design of Circuits with Limited Gate Fan-in

p231

- E.g.2 By only using 2-input NAND gates and inverters to realize the functions shown in the following,

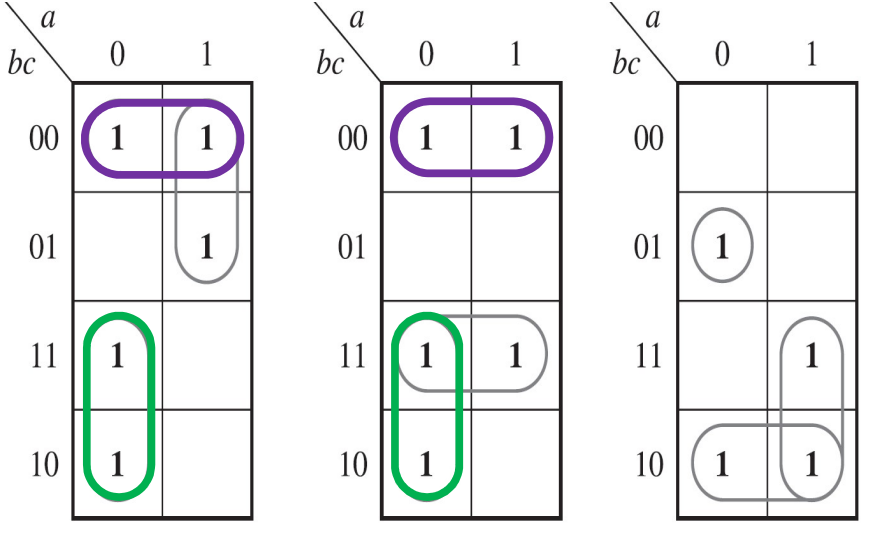

$f_1 = \Sigma\, m(0, 2, 3, 4, 5)$ $f_2 = \Sigma\, m(0, 2, 3, 4, 7)$ $f_3 = \Sigma\, m(1, 2, 6, 7)$

$$f_1 = \boxed{b'c'} + ab' + \boxed{a'b}$$

$$f_2 = \boxed{b'c'} + bc + \boxed{a'b}$$

$$f_3 = a'b'c + ab + bc'$$

8.2 Design of Circuits with Limited Gate Fan-in

p232

- Each function requires a 3-input OR gate, so we will factor to reduce the number of inputs:

$$\left.\begin{aligned} f_1 &= b'c' + ab' + a'b \\ f_2 &= b'c' + bc + a'b \\ f_3 &= a'b'c + ab + bc' \end{aligned}\right\}$$

$$\begin{aligned} f_1 &= b'(\underline{a + c'}) + \boxed{\underline{a'b}} \\ f_2 &= b(a' + c) + b'c' \\ f_3 &= a'b'c + b(\underline{a + c'}) \end{aligned}$$

$$a'b'c = a'(b'c) = \boxed{a'(b} + c')'$$

Common terms: a'b , a + c'

8.2 Design of Circuits with Limited Gate Fan-in p232

$$f_1 = b'(\underline{a + c'}) + \boxed{\underline{a'b}}$$
$$f_2 = b(a' + c) + b'c'$$
$$f_3 = a'b'c + b(\underline{a + c'})$$

- Common terms: a’b , a + c’

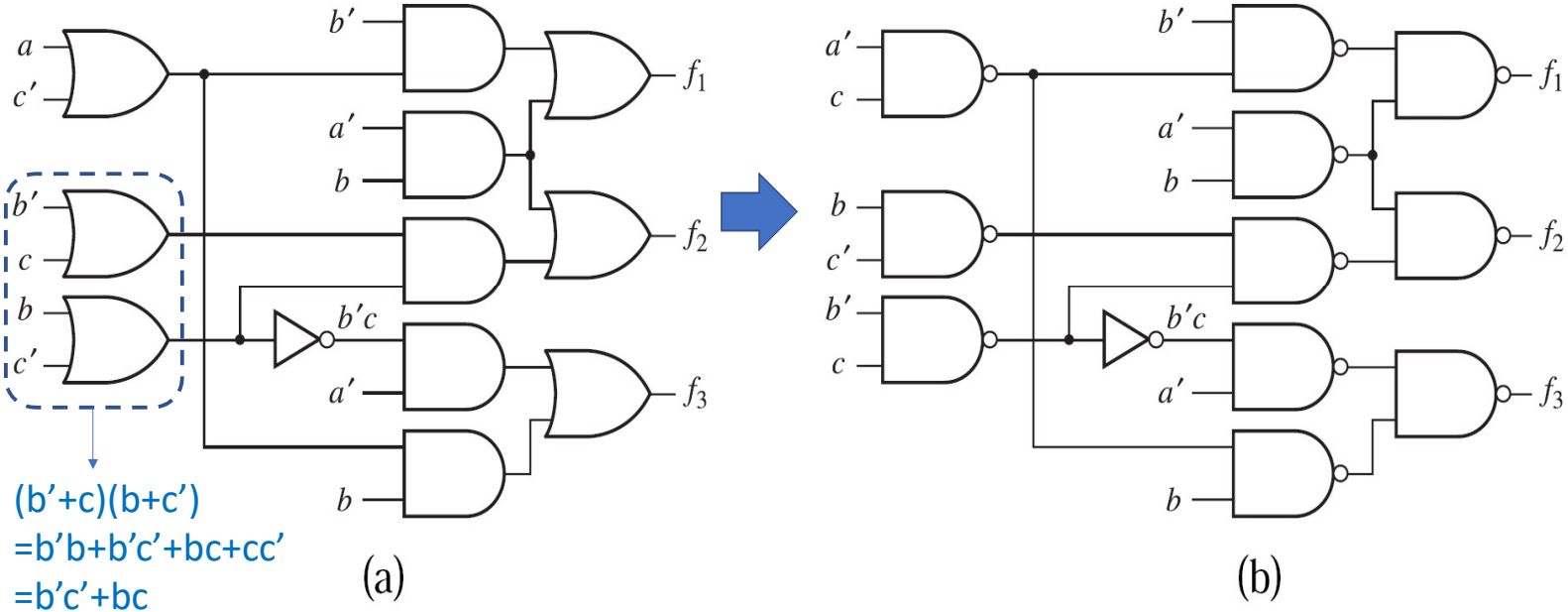

(b’+c)(b+c’)
=b’b+b’c’+bc+cc’
=b’c’+bc

8.3 Gate Delays and Timing Diagrams

p232

- If the change in output is delayed by time, t, with respect to the input, we say that this gate has a propagation delay of t.
- The propagation delay for a 0 to 1 output change may be different than the delay for a 1 to 0 change.
- Propagation delays for integrated circuit gates may be as short as a few nanoseconds. (In 5nm technology, the delay is ~1 picosecond.)

8.3 Gate Delays and Timing Diagrams

p233

- Timing Diagrams (時序圖) are used in the analysis of circuits in function of time.

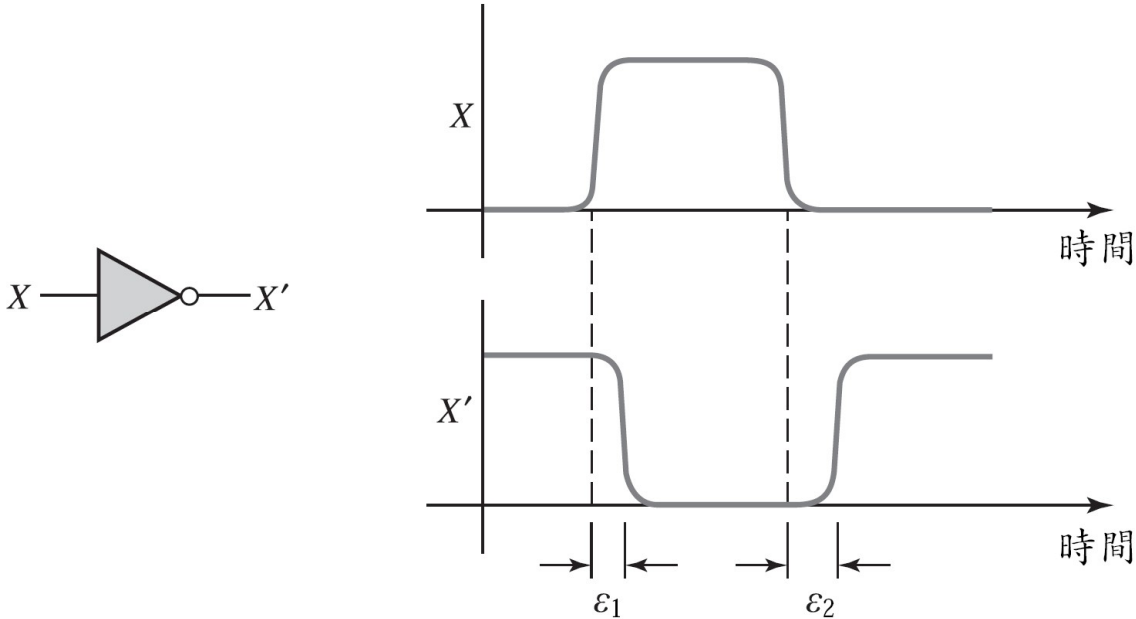

8.3 Gate Delays and Timing Diagrams

p233

- E.g.1 For example, the propagation delay is 20ns.

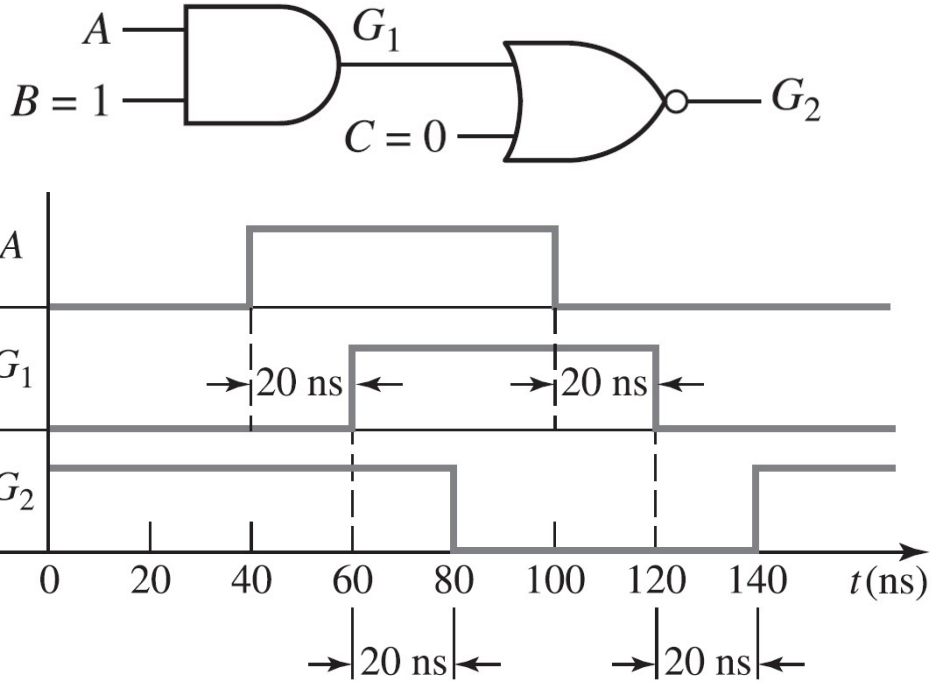

8.3 Gate Delays and Timing Diagrams

p233

- E.g.2 A timing diagram for a circuit with an added delay element, 1 microsecond.

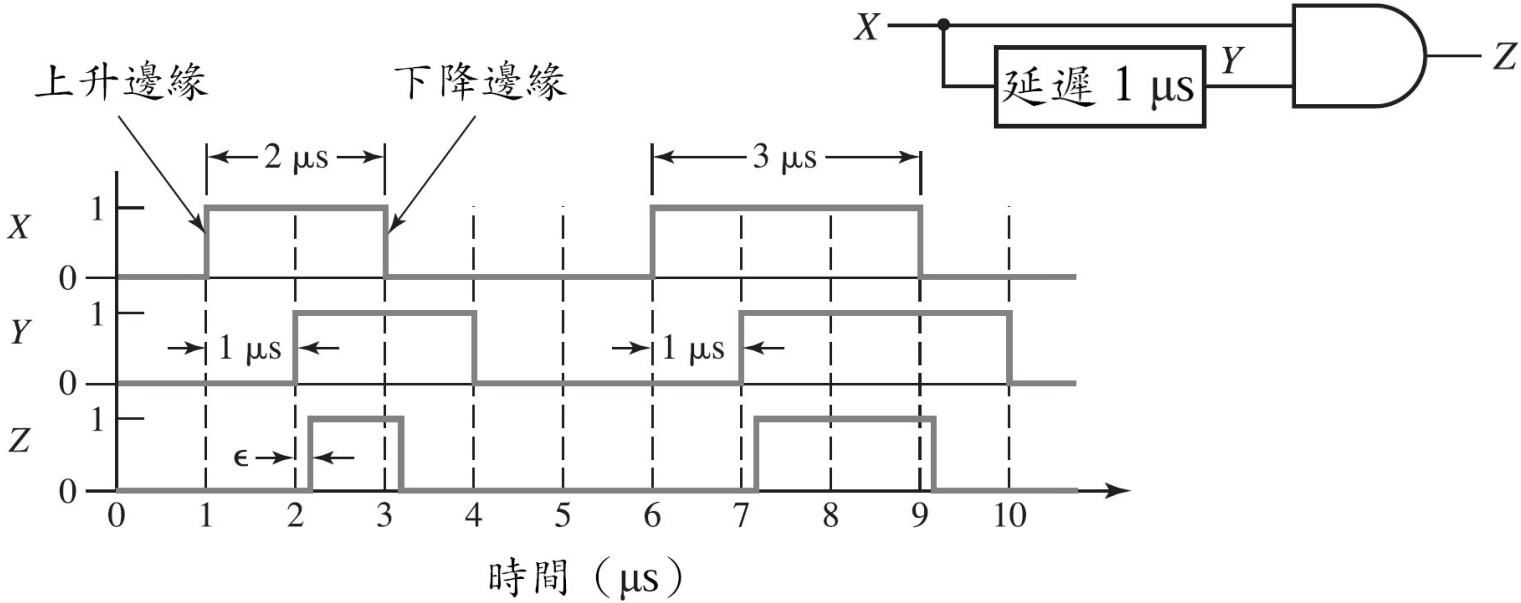

8.4 Static Hazards in Combinational Logic

p234

- **Hazards**: an unavoidable danger or risk, even though often foreseeable.
- When the input to a combinational circuit changes, unwanted switching transients may appear in the output.
- Static 1-hazard: a circuit output may momentarily go to 0 when it should remain a constant 1.
- Static 0-hazard: a circuit output may momentarily go to 1 when it should remain a constant 0.

8.4 Static Hazards in Combinational Logic

p234

- (補充)Dynamic hazard: when the output is supposed to change from 0 to 1 (or 1 to 0), the output may change 3 or more times.

(a) 靜態 1-雜訊 (b) 靜態 0-雜訊 (c) 動態雜訊

8.4 Static Hazards in Combinational Logic

p235

- E.g. 1: Circuit with a static 1-hazard:

If A=C=1,
F=B+B'=1
(constantly)

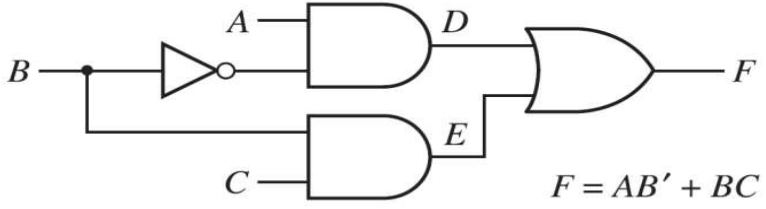

(a) 具有靜態 1-Hazard 的電路

BC \ A	0	1
00	0	1
01	0	1
11	1	1
10	0	0

1 Hazard (紅藍狀態之間轉換時可能會產生hazard)

(b) 時序圖

從output往input方向分析

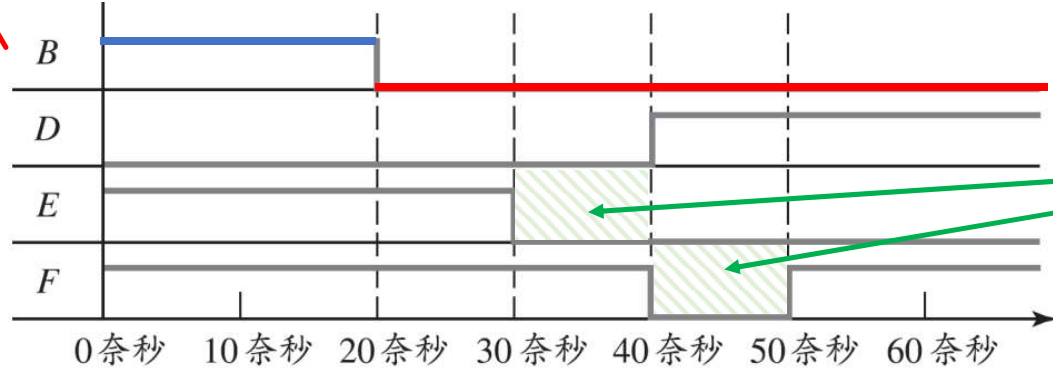

Hazard

8.4 Static Hazards in Combinational Logic

- E.g. 1: Avoid the static 1-hazard:

p235

If A=C=1,F=B+B'=1 (constantly)

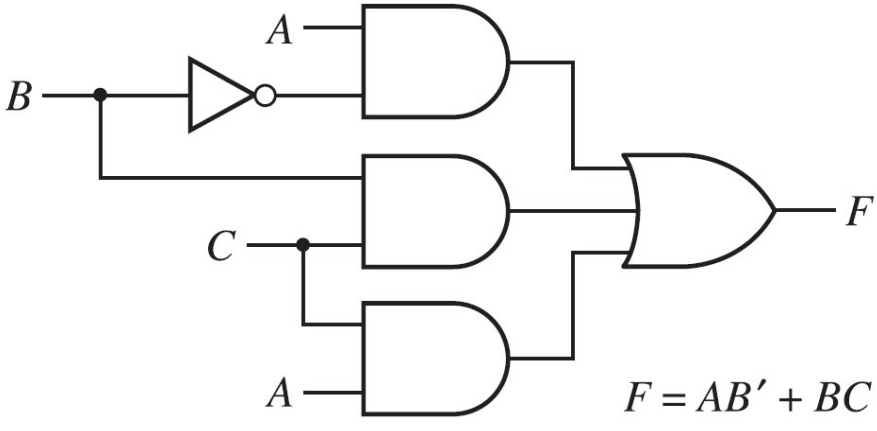

$F = AB' + BC + AC$

BC \ A	0	1
00	0	1
01	0	1
11	1	1
10	0	0

Fill the gap

8.4 Static Hazards in Combinational Logic

p236

- Hazard can be detected using a Karnaugh map using the following procedure:

1. Write the sum-of-product expression.
2. Plot each term on the map and loop it.
3. If any two adjacent 1's are not covered by the same loop, a 1-hazard exists.

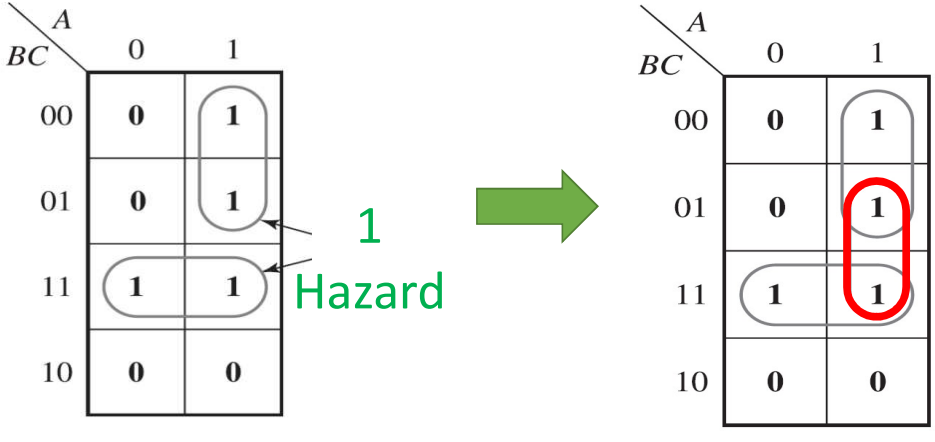

8.4 Static Hazards in Combinational Logic

p236

- E.g. 2: Circuit with a static 0-hazard:

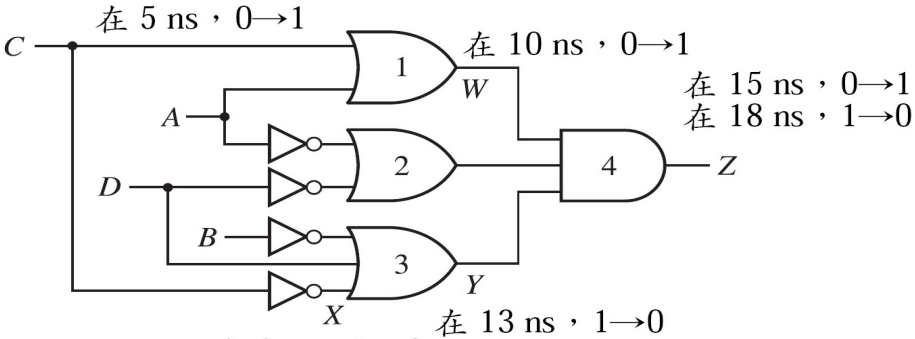

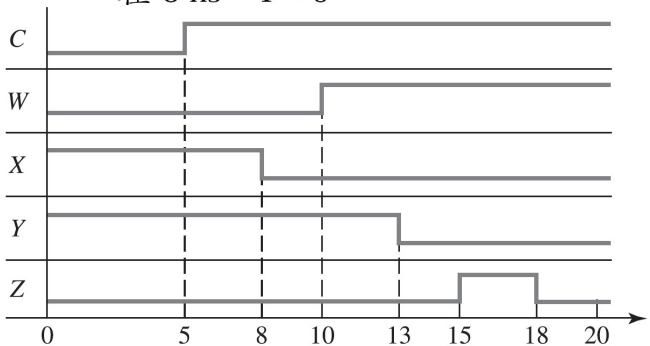

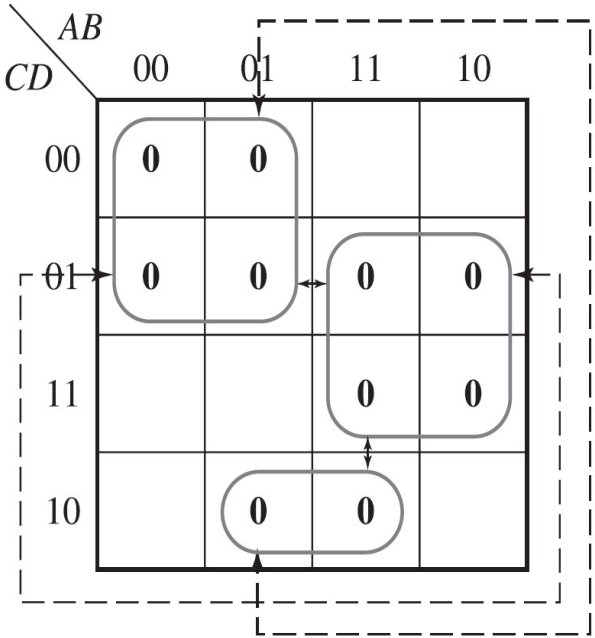

每個反相器的閘延遲為3 ns，且每個AND閘及每個OR閘的閘延遲為5 ns

8.4 Static Hazards in Combinational Logic

- **E.g. 2: Circuit with a static 0-hazard:** p236

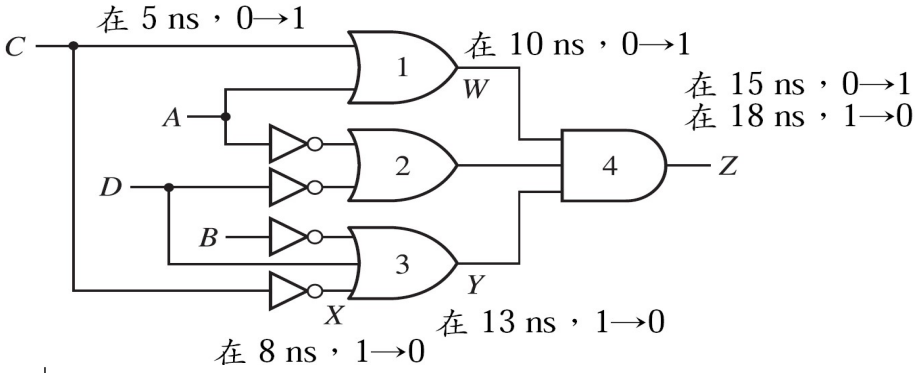

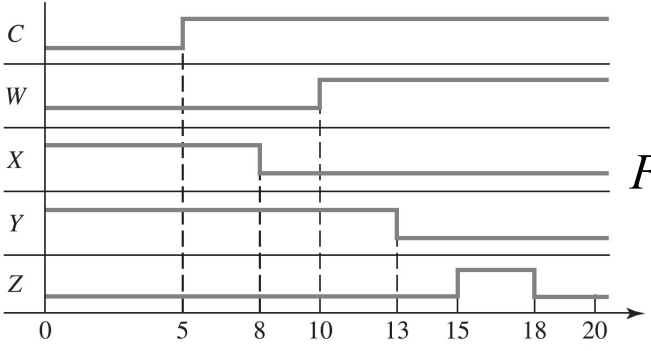

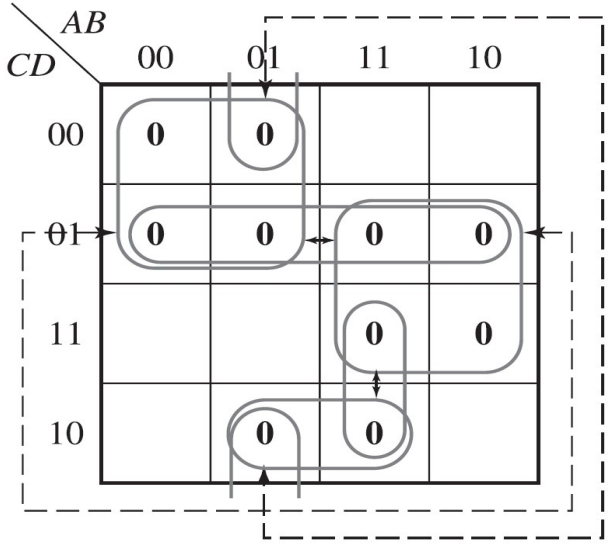

$$F=(A+C)(A'+D')(B'+C'+D)(C+D')(A+B'+D)(A'+B'+C')$$

每個反相器的閘延遲為3 ns，且每個AND閘及每個OR閘的閘延遲為5 ns