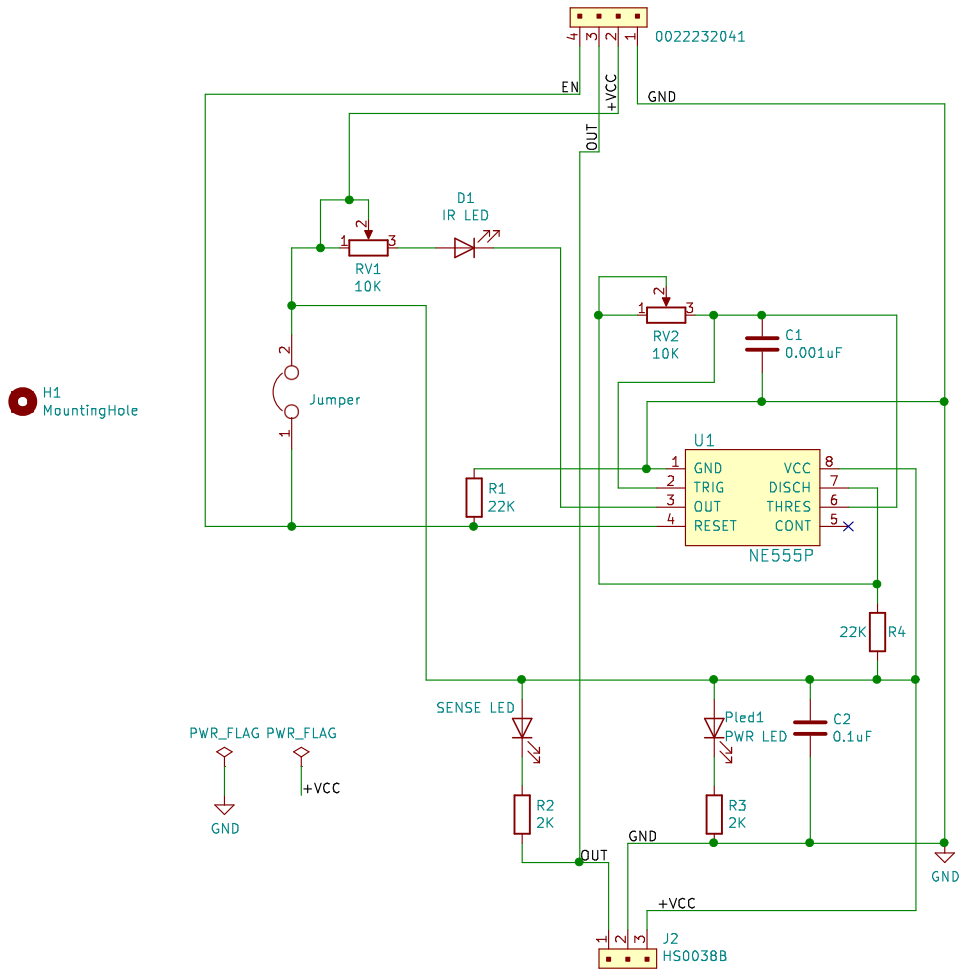

open source hardware

Drawn by : Anandu
Verified by : Jerryl
Elementz Engineers Guild Pvt Ltd

Elementz Engineers Guild Pvt Ltd

Sheet: /
File: IR_Sensor_Module_555_V1.1.sch

Title: IR Sensor Module 555 Model A

Size: A4	Date: 2020-07-22	**Rev: V1.1**
KiCad E.D.A. kicad 5.1.5-52549c5~6ubuntu16.04.1		Id: 1/1