Kiss_SDR
Rev 0.1

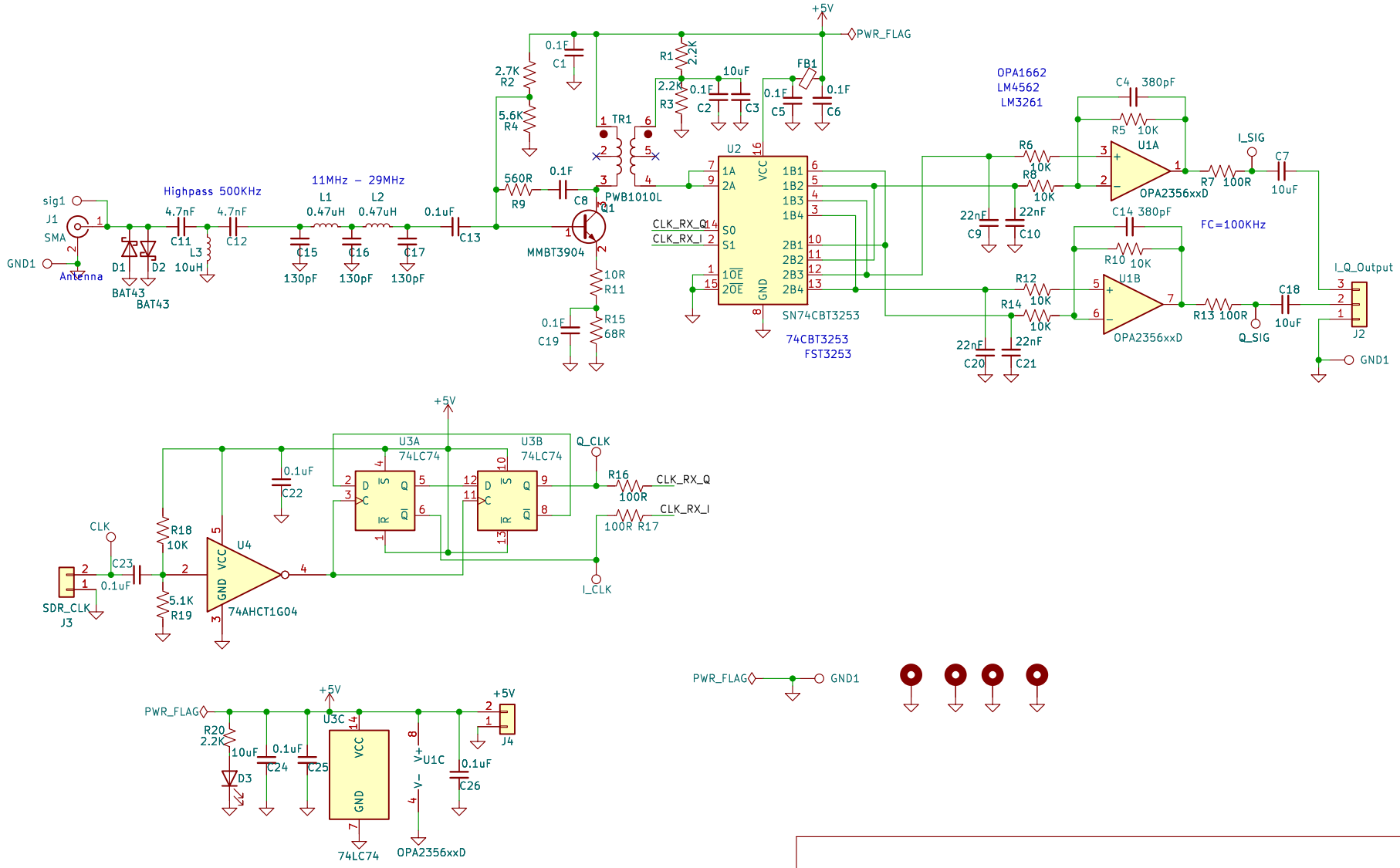

Sheet: /	
File: kiss_sdr_r1.kicad_sch	
Title: kiss_sdr_r1	
Size: USLetter | Date: 2024-03-12	**Rev: 0.1**
KiCad E.D.A. kicad 7.0.10-7.0.10~ubuntu22.04.1	Id: 1/1