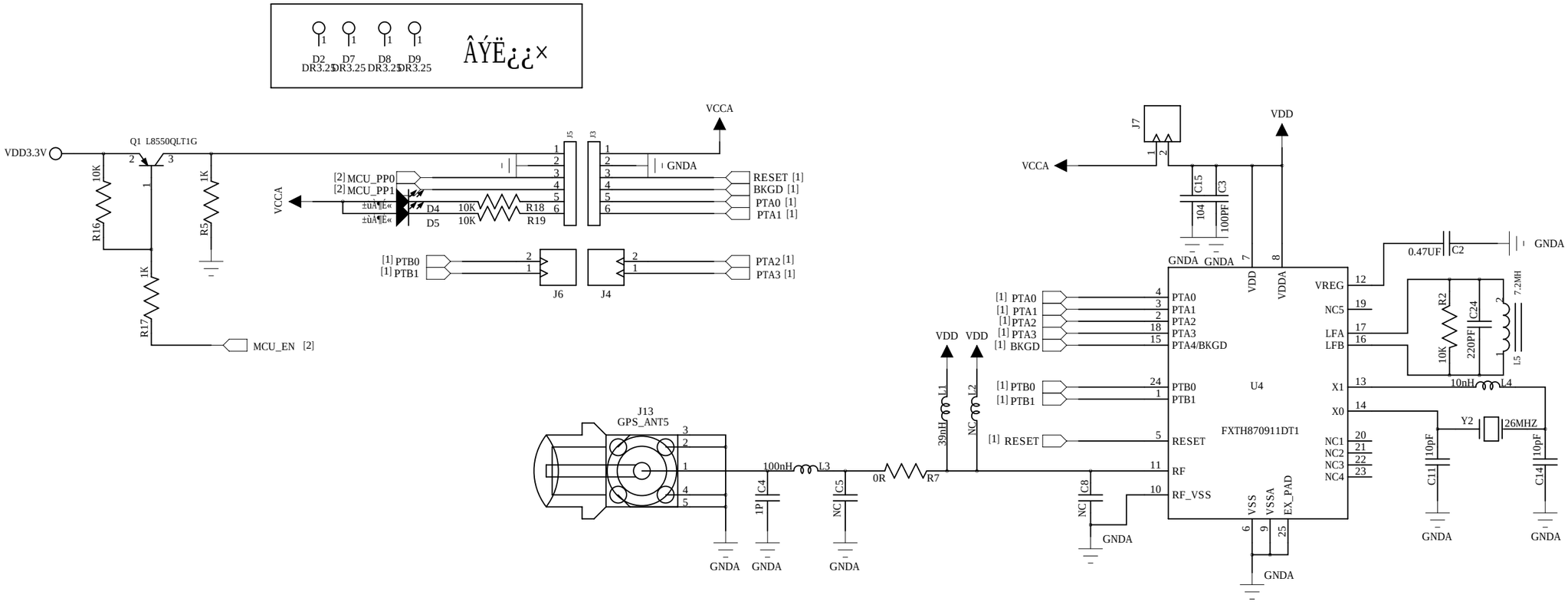
D2 DR3.25
D7 DR3.25
D8 DR3.25
D9 DR3.25
VDD3.3V
Q1 L8550QLT1G
R16 10K
R5 1K
R17 1K
MCU_EN [2]
VCCA
[2] MCU_PP0
[2] MCU_PP1
D4
D5
R18 10K
R19 10K
J5
J3
GNDA
RESET [1]
BKGD [1]
PTA0 [1]
PTA1 [1]
[1] PTB0
[1] PTB1
J6
J4
PTA2 [1]
PTA3 [1]
J7
VDD
C15 104
C3 100PF
GNDA
0.47UF C2
VREG
NC5
LFA
LFB
R2 10K
C24 220PF
L5 7.2MH
10nH L4
X1
X0
Y2 26MHZ
C11 10pF
C14 10pF
NC1
NC2
NC3
NC4
[1] PTA0
[1] PTA1
[1] PTA2
[1] PTA3
[1] BKGD
PTA0
PTA1
PTA2
PTA3
PTA4/BKGD
[1] PTB0
[1] PTB1
PTB0
PTB1
[1] RESET
RESET
RF
RF_VSS
U4
FXTH870911DT1
VDD
VDDA
VSS
VSSA
EX_PAD
L1 39nH
L2 NC
C8 NC
J13
GPS_ANT5
100nH L3
C4 1P
C5 NC
0R R7

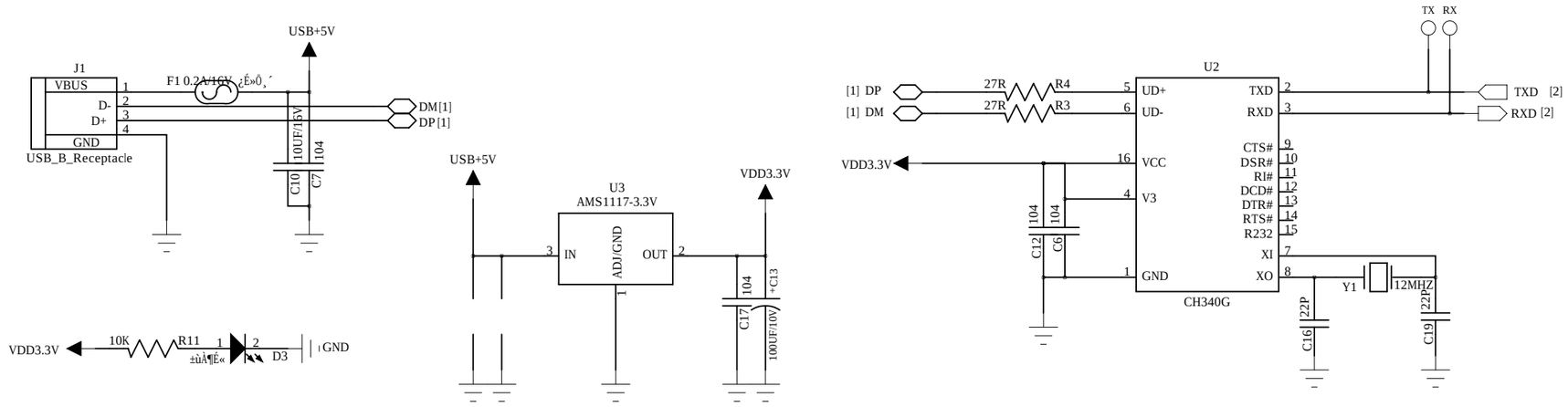
J1
VBUS
D-
D+
GND
USB_B_Receptacle
F1 0.2A/16V
USB+5V
10UF/16V C10
104 C7
DM[1]
DP[1]
VDD3.3V
10K R11
D3
GND
U3
AMS1117-3.3V
IN
ADJ/GND
OUT
104 C17
+C13 100UF/10V
TX RX
U2
[1] DP
[1] DM
27R R4
27R R3
UD+
UD-
VCC
V3
GND
TXD
RXD
CTS#
DSR#
RI#
DCD#
DTR#
RTS#
R232
XI
XO
CH340G
TXD [2]
RXD [2]
104 C12
104 C6
Y1 12MHZ
22P C16
22P C19

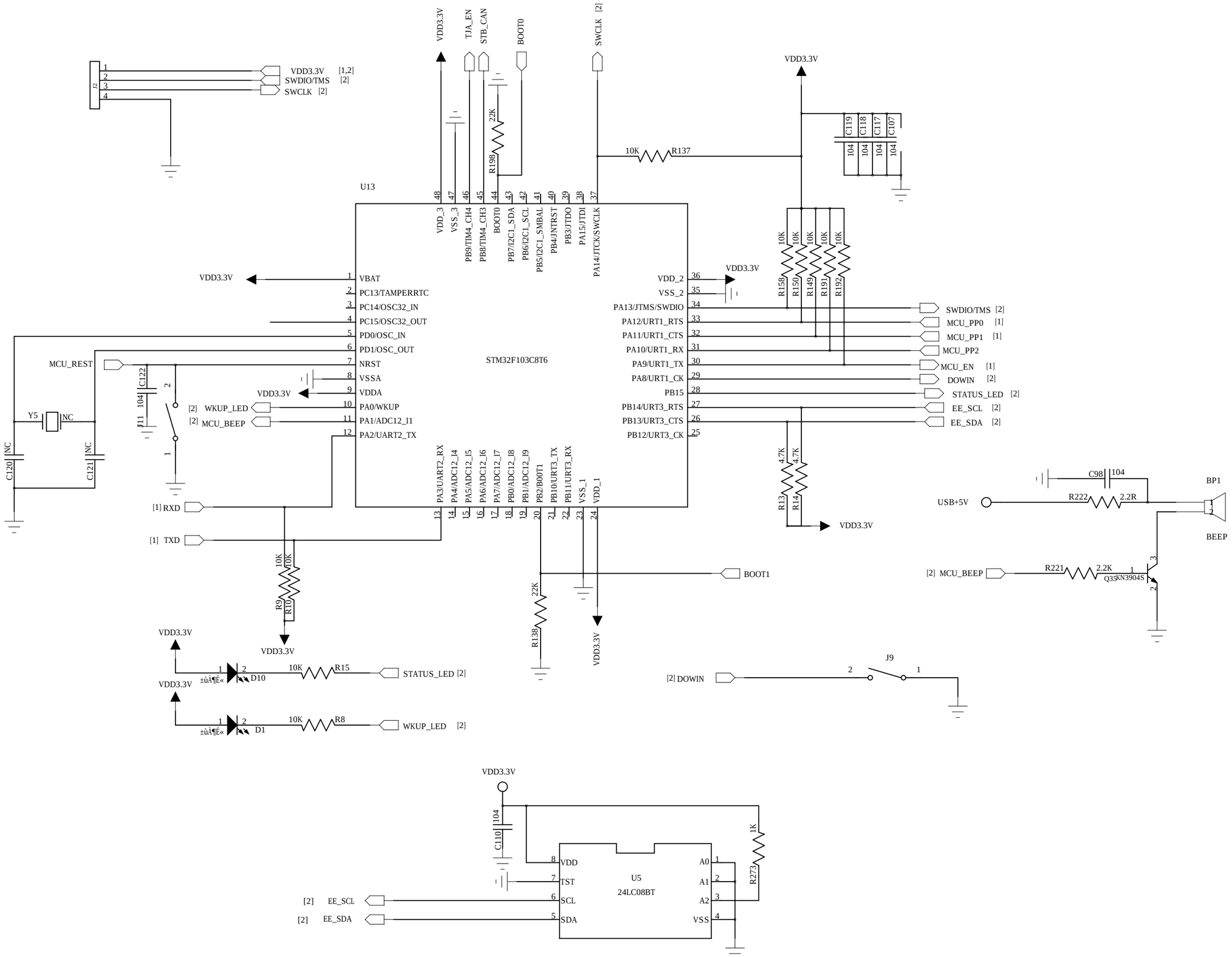
U13
STM32F103C8T6
VDD3.3V
TJA_EN
STB_CAN
BOOT0
SWCLK [2]
VDD_3
VSS_3
PB9/TIM4_CH4
PB8/TIM4_CH3
BOOT0
PB7/I2C1_SDA
PB6/I2C1_SCL
PB5/I2C1_SMBAL
PB4/JNTRST
PB3/JTDO
PA15/JTDI
PA14/JTCK/SWCLK
VBAT
PC13/TAMPERRTC
PC14/OSC32_IN
PC15/OSC32_OUT
PD0/OSC_IN
PD1/OSC_OUT
NRST
VSSA
VDDA
PA0/WKUP
PA1/ADC12_I1
PA2/UART2_TX
PA3/UART2_RX
PA4/ADC12_I4
PA5/ADC12_I5
PA6/ADC12_I6
PA7/ADC12_I7
PB0/ADC12_I8
PB1/ADC12_I9
PB2/B00T1
PB10/URT3_TX
PB11/URT3_RX
VSS_1
VDD_1
VDD_2
VSS_2
PA13/JTMS/SWDIO
PA12/URT1_RTS
PA11/URT1_CTS
PA10/URT1_RX
PA9/URT1_TX
PA8/URT1_CK
PB15
PB14/URT3_RTS
PB13/URT3_CTS
PB12/URT3_CK
SWDIO/TMS [2]
MCU_PP0 [1]
MCU_PP1 [1]
MCU_PP2
MCU_EN [1]
DOWIN [2]
STATUS_LED [2]
EE_SCL [2]
EE_SDA [2]
MCU_REST
Y5
NC
C120
C121
C122
104
WKUP_LED [2]
MCU_BEEP [2]
[1] RXD
[1] TXD
BOOT1
R198 22K
R137 10K
R158 R150 R149 R191 R192 10K
C119 C118 C117 C107 104
R13 R14 4.7K
R9 R10 10K
R138 22K
R15 10K
R8 10K
D10
D1
STATUS_LED [2]
WKUP_LED [2]
[2] DOWIN
J9
C98 104
R222 2.2R
USB+5V
BP1
BEEP
R221 2.2K
Q35 KN3904S
[2] MCU_BEEP
U5
24LC08BT
VDD
TST
SCL
SDA
A0
A1
A2
VSS
C110 104
R273 1K
[2] EE_SCL
[2] EE_SDA