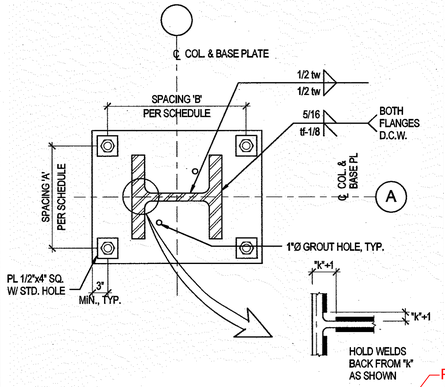

4 BOLT RECTANGULAR BASE PLATE CONFIGURATION 16

1" = 1'-0"

RFI #0197

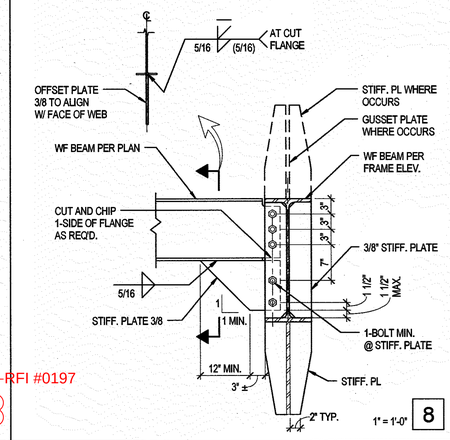

1" = 1'-0" 8

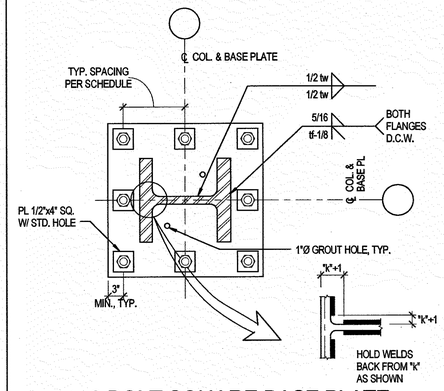

8 BOLT SQUARE BASE PLATE CONFIGURATION 4

1" = 1'-0"

RFI #0197

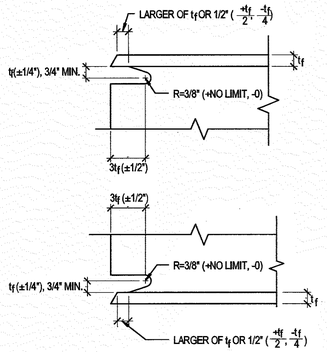

BRB BEAM WELD ACCESS HOLE 11

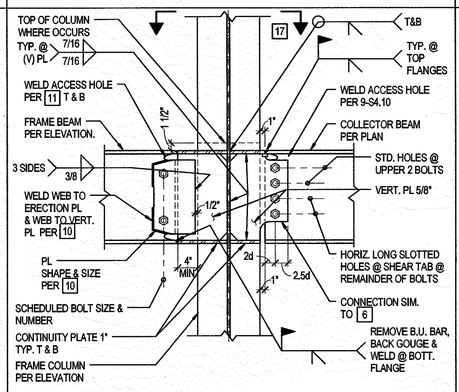

ONE - SIDED BRB BEAM TO COLUMN WEB CONN. 7

1" = 1'-0"

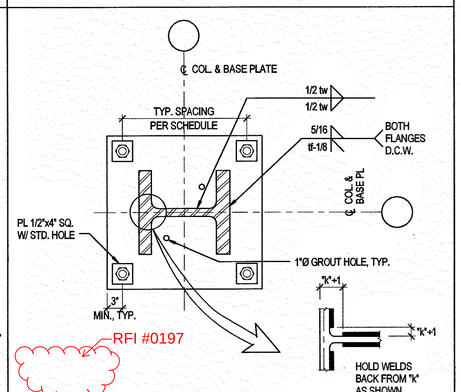

RFI #0197

4 BOLT SQUARE BASE PLATE CONFIGURATION 3

1" = 1'-0"

RFI #0197

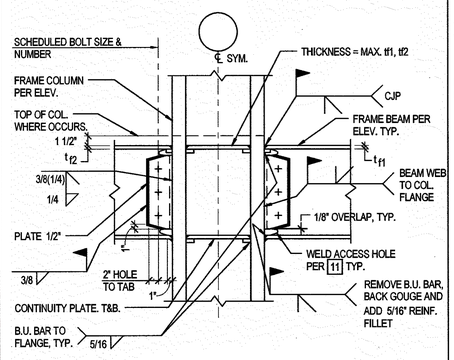

BRB BEAM TO FRAME COLUMN FLANGE 10

RFI #0197

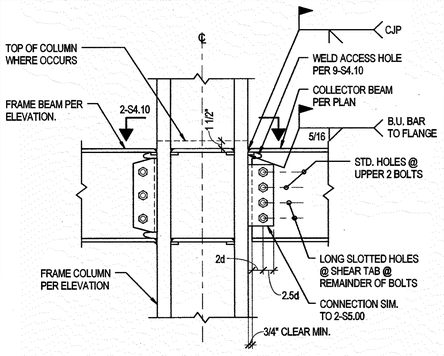

COLLECTOR BEAM TO FRAME COLUMN FLANGE 6

1" = 1'-0"

COLUMN LOCATION	BASE PLATE	ANCHOR RODS	MIN. SPACING	DETAIL
A-2, A-9	2 1/2"x26"x2'-2"	8-1 3/4"Ø	10"	4
A-4, A-5, A-6, A-7, A-8	2 1/2"x26"x2'-9"	4-1 3/4"Ø	A = 20" B = 27"	16
B.9-2, B.9-4, B.9-7, B.9-9, C-12, C.9-4, C.9-7, F-12	2 1/2"x30"x2'-6"	8-1 3/4"Ø	12'	8
C.9-2, C.9-3, C.9-5, C.9-6, C.9-8, C.9-9, D-11, D-13, E-11, E-13	2 1/2"x30"x2'-6"	4-1 3/4"Ø	24"	3
C-11, C-13, F-11, F-13	2 1/2"x32"x2'-8"	8-1 3/4"Ø	13"	4

RFI #0197

NOTES:
1. ALL ANCHOR RODS ARE HIGH STRENGTH PER SPECIFICATION.

RFI #0197

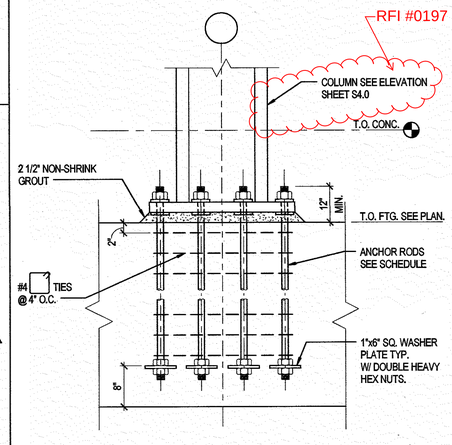

LATERAL COLUMN BASE PLATE SCHEDULE 1

1" = 1'-0"

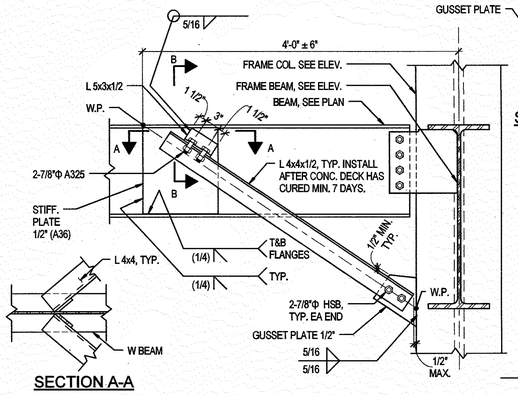

SECTION A-A

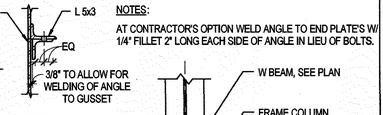

SECTION B-B

NOTES:
AT CONTRACTOR'S OPTION WELD ANGLE TO END PLATE'S W/ 1/4" FILLET 2" LONG EACH SIDE OF ANGLE IN LIEU OF BOLTS.

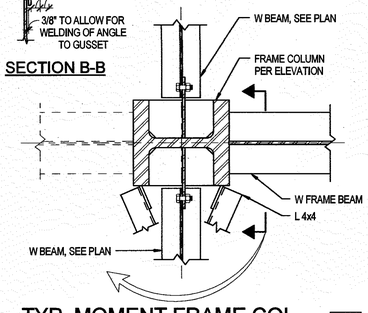

TYP. MOMENT FRAME COL. BRACING 9

1" = 1'-0"

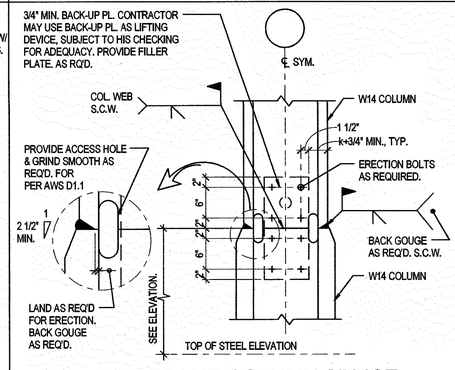

TYP. FRAME COLUMN SPLICE 5

1" = 1'-0"

NOTE: ALL WELDS ON THIS SHEET ARE DEMAND CRITICAL WELDS. SEE SPECIFICATION SECTION 05120 & 05125.

UCMERCED
UNIVERSITY OF CALIFORNIA, MERCED

Science + Engineering Building 2

SMITHGROUP
architecture engineering interiors planning

SMITHGROUP, INC
301 BATTERY STREET
7TH FLOOR
SAN FRANCISCO, CA 94111
T 415.227.0100
F 415.908.0862
www.smithgroup.com

BKF
CIVIL ENGINEER
4670 Willow Street, Suite 250
Pleasanton, CA 94588
(925) 395-7704

Cliff Lowe Associates
LANDSCAPE ARCHITECT
1175 Folsom Street
San Francisco, CA 94103
(415) 431-0394

Rutherford and Chekene
STRUCTURAL ENGINEER
55 Second Street, Suite 600
San Francisco, CA 94105
(415) 568-4400

Research Facilities Design
LABORATORY PLANNING
3965 Fifth Avenue, Suite 300
San Diego, CA 92103
(619) 297-0159

Gayner Engineers
MECHANICAL, ELECTRICAL, PLUMBING & FIRE PROTECTION
1133 Post Street
San Francisco, CA 94109
(415) 474-9500

TEECOM Design Group
TELECOMMUNICATIONS, SECURITY & AUDIO/VISUAL
1333 Broadway, Suite 501
Oakland, CA 94612
(510) 337-2800

Colin Gordon Associates
ACOUSTICS
150 North Hill Drive, Suite 15
Brisbane, CA 94005
(650)570-0350

UNIVERSITY OF CALIFORNIA
MERCED
FIRE MARSHAL

Approval of this plan does not authorize or approve any omission or deviation from applicable regulations. Final approval is subject to field inspection. One set of approved plans shall be available on the project site at all times.

Reviewed by: Gini Krippner
Date: 7/25/11
Project #: 900020

ISSUED FOR	REV	DATE
100% CONSTRUCTION DOCUMENTS		15 JUNE 2011

SEALS AND SIGNATURES

REGISTERED PROFESSIONAL ENGINEER
MARK ROSS ROSS
4086
EXP. 06/30/12
STRUCTURAL
STATE OF CALIFORNIA

IDENTIFICATION STAMP
DIV. OF THE STATE ARCHITECT
FILE NO. 01-UC MERCED
APPL. NO. 01-111533
AC. — FLS — SS. —
DATE: 06/21/2011

KEYPLAN

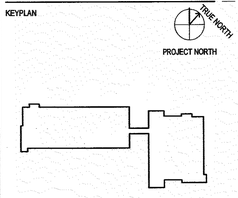

DRAWING TITLE
L.F.R.S. FRAME DETAILS

SCALE: As indicated
UCM PROJECT NUMBER: 900020
SG PROJECT NUMBER: 38354.000
DRAWING NUMBER: S4.06

C:\Projects\UC Merced\REVIT\esu_UCMERCEDSE2_RS11_20110531.rvt
Plot Date: 6/9/2011 6:02:27 PM