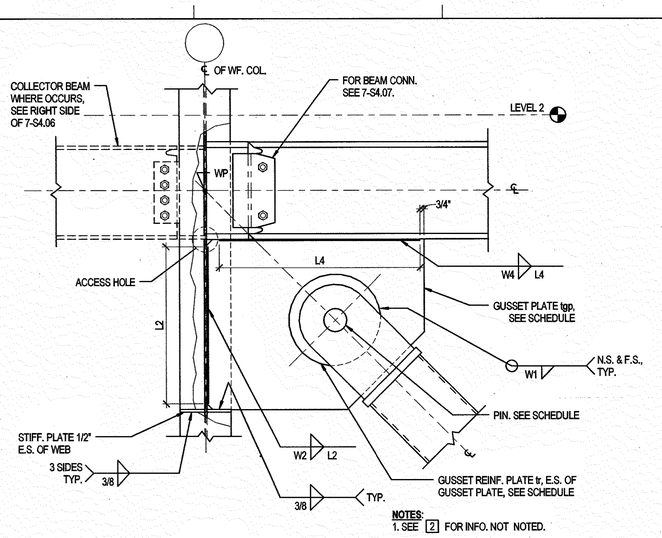

NOTES:
1. SEE 2 FOR INFO. NOT NOTED.

BRACE TO COLUMN WEB CONNECTION

1" = 1'-0" 9

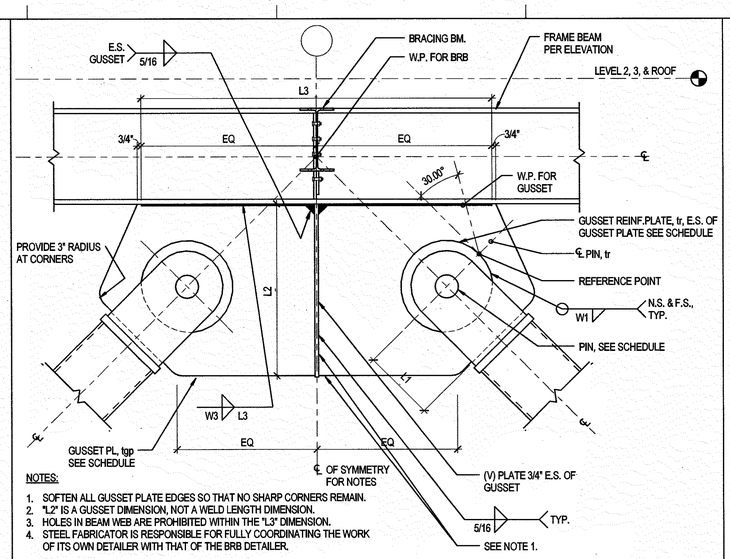

NOTES:
1. SOFTEN ALL GUSSET PLATE EDGES SO THAT NO SHARP CORNERS REMAIN.
2. "L2" IS A GUSSET DIMENSION, NOT A WELD LENGTH DIMENSION.
3. HOLES IN BEAM WEB ARE PROHIBITED WITHIN THE "L3" DIMENSION.
4. STEEL FABRICATOR IS RESPONSIBLE FOR FULLY COORDINATING THE WORK OF ITS OWN DETAILER WITH THAT OF THE BRB DETAILER.

BRACE TO BEAM FLANGE CONNECTION

1" = 1'-0" 6

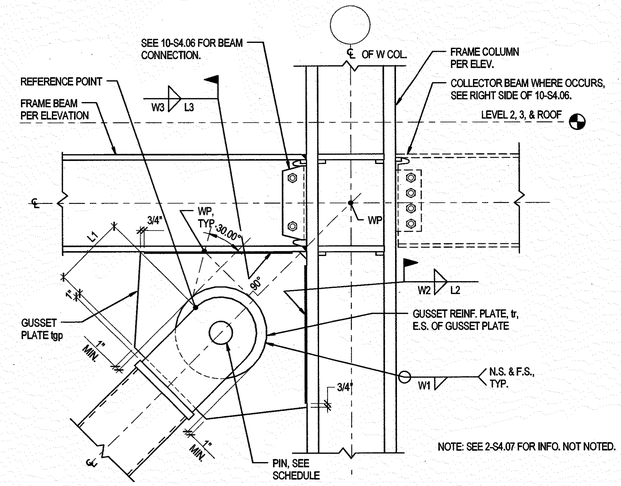

NOTE: SEE 2-S4.07 FOR INFO. NOT NOTED.

BRACE TO COLUMN FLANGE CONNECTION

1" = 1'-0" 3

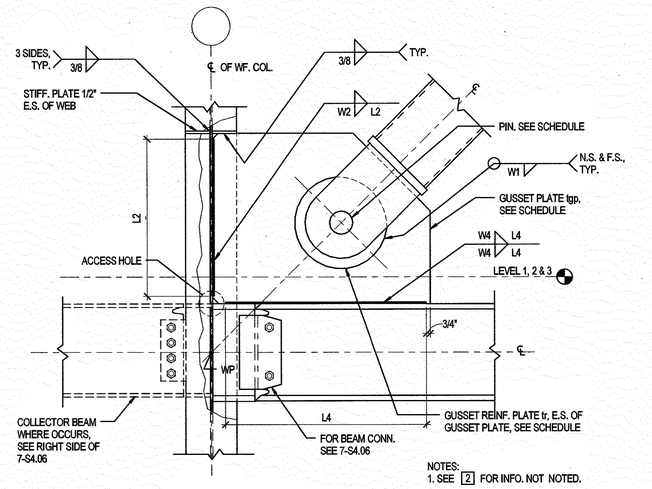

NOTES:
1. SEE 2 FOR INFO. NOT NOTED.

BRACE TO COLUMN WEB CONNECTION

1" = 1'-0" 8

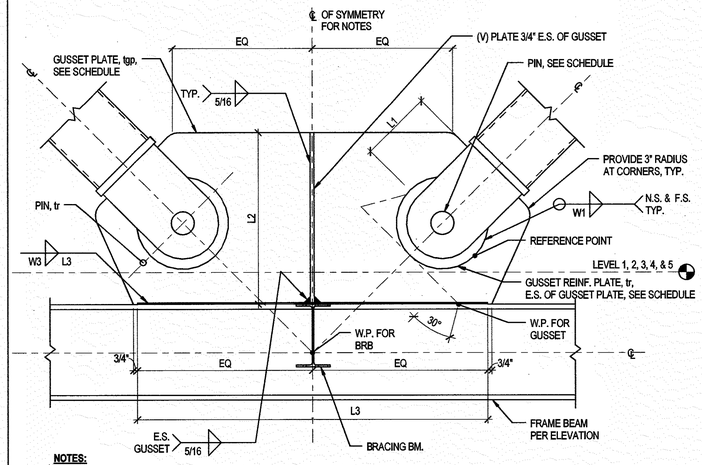

NOTES:
1. SEE 6-S4.07 FOR INFO NOT NOTED.

BRACE TO BEAM FLANGE CONNECTION

1" = 1'-0" 5

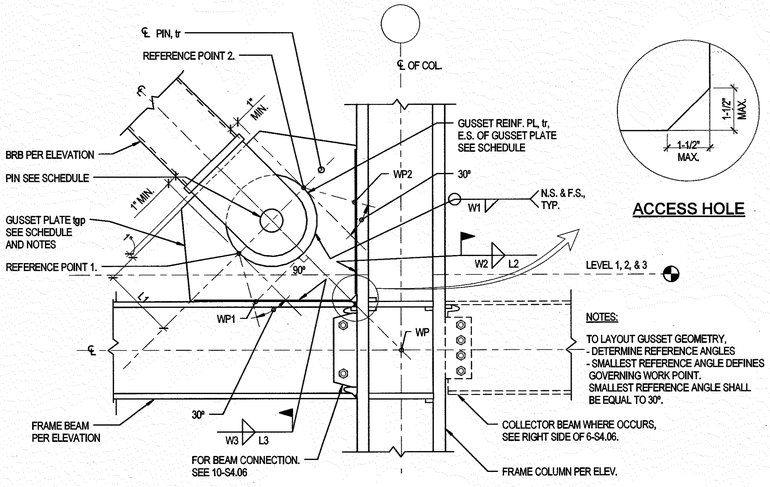

ACCESS HOLE

NOTES:
TO LAYOUT GUSSET GEOMETRY,
- DETERMINE REFERENCE ANGLES
- SMALLEST REFERENCE ANGLE DEFINES GOVERNING WORK POINT.
SMALLEST REFERENCE ANGLE SHALL BE EQUAL TO 30°.

BRACE TO COLUMN FLANGE CONNECTION

1" = 1'-0" 2

BRB PIN CONNECTION TO COLUMN FLANGE SCHEDULE, DETAILS 2 & 3

LOCATION	BRACE ID	GUSSET PL tgp (IN)	NOMINAL PIN DIA. (IN)	GUSSET REINF. PL			EDGE DIST.	WELDS			
				W1	DIAM. (IN)	tr (IN)	L1	W2	L2	W3	L3
ANY LOCATION	BRB4	3/4	2	5/16	6	3/4	6	3/8	12	3/8	14
	BRB5	3/4	2 1/2	5/16	8	3/4	8	3/8	14	3/8	16
	BRB6	3/4	3	5/16	10	3/4	10	3/8	16	3/8	18

BRB PIN V OR INVERTED-V CONNECTION SCHEDULE, DETAIL 5 & 6

LOCATION	BRACE ID	GUSSET PL tgp (IN)	NOMINAL PIN DIA. (IN)	EDGE DIST.	GUSSET REINF. PL			WELDS		
				L1	W1	DIAM. (IN)	tr (IN)	L2	W3	L3
ANY LOCATION	BRB4	3/4	2	6	3/8	6	3/4	8	3/8	21
	BRB5	3/4	2 1/2	8	3/8	8	3/4	8	3/8	24
	BRB6	3/4	3	10	3/8	10	3/4	8	3/8	27

BRB PIN CONNECTION TO COLUMN WEB SCHEDULE, DETAIL 8 & 9

LOCATION	BRACEID	GUSSET PL tgp (IN)	PIN DIA. (IN)	EDGE DIST.	GUSSET REINF. PL			WELDS			
				L1	W1	DIAM. (IN)	tr (IN)	W2	L2	W4	L4
ANY LOCATION	BRB4	3/4	2	6	5/16	6	3/4	3/8	12	3/8	20
	BRB5	3/4	2 1/2	8	5/16	8	3/4	3/8	14	3/8	24
	BRB6	3/4	3	10	5/16	10	3/4	3/8	16	3/8	28

NOTES:
1. THE REQUIREMENTS OF AWS D1.8 SECTIONS 6.15.2 THROUGH 6.15.4 ARE APPLICABLE TO THE FABRICATION/ERECTION OF GUSSET PLATES.
2. SOFTEN ALL GUSSET PLATE EDGES SO THAT NO SHARP CORNERS REMAIN.
3. HOLES IN BEAM WEB ARE PROHIBITED WITHIN THE "L3" DIMENSION.
4. STEEL FABRICATOR IS REPONSIBLE FOR FULLY COORDINATING THE WORK OF ITS OWN DETAILER WITH THAT OF THE BRB DETAILER.
5. ALL WELDS ARE D.C.W.

GUSSET PLATE SCHEDULE

1" = 1'-0" 1

NOTE: ALL WELDS ON THIS SHEET ARE DEMAND CRITICAL WELDS. SEE SPECIFICATION SECTION 05120 & 05125.

UCMERCED
UNIVERSITY OF CALIFORNIA, MERCED

Science + Engineering Building 2

SMITHGROUP
architecture engineering interiors planning

SMITHGROUP, INC
301 BATTERY STREET
7TH FLOOR
SAN FRANCISCO, CA 94111
T 415.227.0100
F 415.908.0862
www.smithgroup.com

BKF
CIVIL ENGINEER
4670 Willow Street, Suite 250
Pleasanton, CA 94588
(925) 396-7704

Cliff Lowe Associates
LANDSCAPE ARCHITECT
1175 Folsom Street
San Francisco, CA 94103
(415) 431-0394

Rutherford and Chekene
STRUCTURAL ENGINEER
55 Second Street, Suite 600
San Francisco, CA 94105
(415) 568-4400

Research Facilities Design
LABORATORY PLANNING
3965 Fifth Avenue, Suite 300
San Diego, CA 92103
(619) 297-0159

Gayner Engineers
MECHANICAL, ELECTRICAL, PLUMBING & FIRE PROTECTION
1133 Post Street
San Francisco, CA 94109
(415) 474-9500

TEECOM Design Group
TELECOMMUNICATIONS, SECURITY & AUDIO/VISUAL
1333 Broadway, Suite 601
Oakland, CA 94612
(510) 337-2600

Colin Gordon Associates
ACOUSTICS
150 North Hill Drive, Suite 15
Brisbane, CA 94005
(650)570-0350

UNIVERSITY OF CALIFORNIA
MERCED
FIRE MARSHAL

Approval of this plan does not authorize or approve any omission or deviation from applicable regulations. Final approval is subject to field inspection. One set of approved plans shall be available on the project site at all times.

Reviewed by: Gini Krippner
Date: 7/25/11
Project #: 900020

ISSUED FOR	REV	DATE
100% CONSTRUCTION DOCUMENTS		15 JUNE 2011

SEALS AND SIGNATURES

REGISTERED PROFESSIONAL ENGINEER
4088
Exp. 10/30/12
STRUCTURAL
STATE OF CALIFORNIA

IDENTIFICATION STAMP
DIV. OF THE STATE ARCHITECT
FILE NO. 01-UC MERCED
APPL. NO. 01-111533
AC – FLS – SS –
DATE: 06/21/2011

KEYPLAN

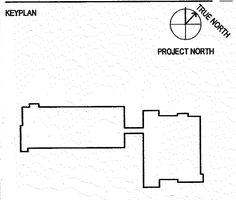

DRAWING TITLE
PINNED SEISMIC BRBF OPTION DETAILS

1" = 1'-0"
SCALE

900020 — UCM PROJECT NUMBER
38354.000 — SG PROJECT NUMBER

DRAWING NUMBER
S4.07

C:\Projects\UC Merced\REV\Tiero_UCMERCEDSE2_RS11_20110531.rvt
Plot Date: 6/9/2011 6:02:29 PM