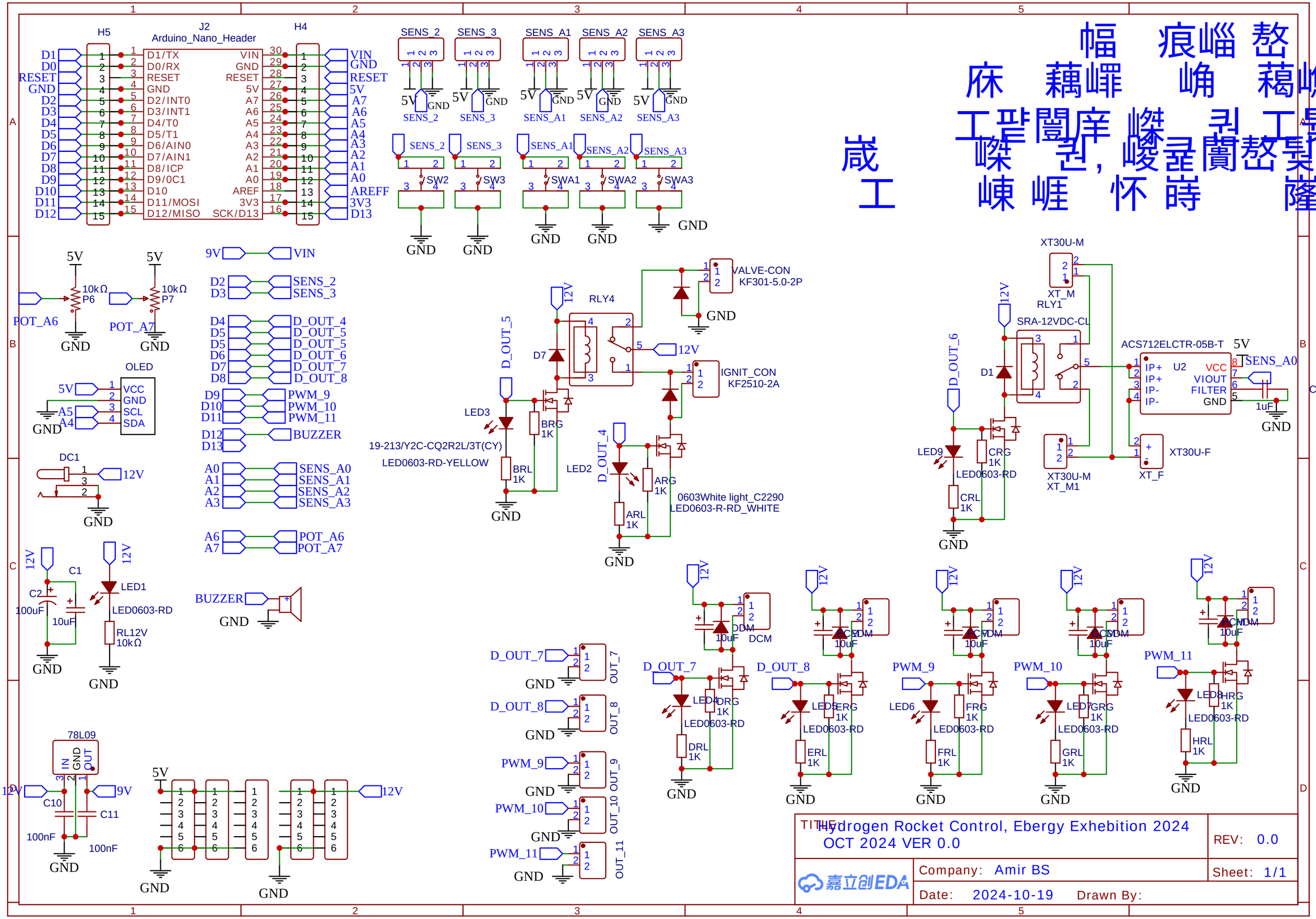
H5
J2
Arduino_Nano_Header
H4
D1/TX
D0/RX
RESET
GND
D2/INT0
D3/INT1
D4/T0
D5/T1
D6/AIN0
D7/AIN1
D8/ICP
D9/0C1
D10
D11/MOSI
D12/MISO
VIN
5V
A7
A6
A5
A4
A3
A2
A1
A0
AREF
3V3
SCK/D13
AREFF
SENS_2
SENS_3
SENS_A1
SENS_A2
SENS_A3
SW2
SW3
SWA1
SWA2
SWA3
POT_A6
POT_A7
10kΩ
P6
P7
9V
D2
D3
D4
D5
D6
D7
D8
D9
D10
D11
D12
D13
D_OUT_4
D_OUT_5
D_OUT_6
D_OUT_7
D_OUT_8
PWM_9
PWM_10
PWM_11
BUZZER
OLED
VCC
SCL
SDA
A5
A4
DC1
12V
C1
C2
100uF
10uF
LED1
LED0603-RD
RL12V
10kΩ
78L09
IN
OUT
C10
C11
100nF
RLY4
D7
LED3
19-213/Y2C-CQ2R2L/3T(CY)
LED0603-RD-YELLOW
BRG
1K
BRL
1K
LED2
ARG
ARL
0603White light_C2290
LED0603-R-RD_WHITE
VALVE-CON
KF301-5.0-2P
IGNIT_CON
KF2510-2A
XT30U-M
XT_M
RLY1
SRA-12VDC-CL
D1
LED9
CRG
CRL
XT30U-M
XT_M1
ACS712ELCTR-05B-T
U2
IP+
IP-
VCC
VIOUT
FILTER
1uF
XT30U-F
XT_F
DDM
DCM
ECM
LED4
DRG
DRL
LED5
ERG
ERL
LED6
FRG
FRL
LED7
GRG
GRL
LED8
HRG
HRL
OUT_7
OUT_8
OUT_9
OUT_10
OUT_11
TITLE: Hydrogen Rocket Control, Ebergy Exhebition 2024
OCT 2024 VER 0.0
REV: 0.0
Company: Amir BS
Sheet: 1/1
Date: 2024-10-19
Drawn By:
嘉立创EDA