Variational Quantum Phase Estimation

Master's Thesis I: Research Proposal

Herbert Díaz

herbert.diaz@uc.cl

Master in Physics
Pontificia Universidad Católica de Chile
Facultad de Física

Supervisor: Prof. Dardo Goyeneche
Co-Guide: Luciano Pereira
Advisors: Jeronimo Maze and Diego Tancara

March 10, 2026

poner abstract

Contents

1 Introduction **1**
1.1 Problem Statement and Motivation . . . 1
1.2 Objectives . . . 2
1.2.1 General Objective . . . 2
1.2.2 Specific Objectives . . . 2

2 Proposed Methodology **3**
2.1 Theoretical Framework . . . 3
2.1.1 Variational Quantum Amplification (VQAmp) . . . 3
2.1.2 Estimator function . . . 4
2.2 Numerical Approach . . . 5

3 Theoretical Background **6**
3.1 Quantum Phase Estimation Algorithm . . . 6
3.1.1 Limitations and Error Sources in Standard QPE . . . 7

4 Work in progress **9**
4.1 Problem Statement . . . 9
4.1.1 Variational Quantum Amplifiers . . . 9
4.1.2 Gradient Variance and Trainability . . . 10
4.1.3 Initialization strategy . . . 11
4.2 Variational Quantum Phase Estimators . . . 11
4.2.1 Comparation with VQE . . . 11
4.3 Analytical Results . . . 12
4.3.1 Gradient of the Amplificator Cost Function . . . 12
4.3.2 Generalization for non-zero parameter vector . . . 14
4.3.3 Circuit estimation of the generalized gradient . . . 16
4.3.4 Generalization for Multi-Layer Ansatz . . . 17
4.4 Q-ADAPT-VQAmp . . . 19
4.5 Q-ADAPT-VQPE . . . 19

A Detailed Derivation of the Controlled-Unitary Action and Phase Kickback **22**
A.0.1 Definition of the Controlled Unitary Operators . . . 22
A.0.2 Action on Computational Basis States . . . 22
A.0.3 Product of Controlled Unitary Operators . . . 23
A.0.4 Phase Kickback Mechanism . . . 23

B Local Hamiltonian Analysis **25**

C Gradient Variance Calculations **27**

D Hadamard Test **28**
D.0.1 Derivation 28
D.0.2 Probabilities and Expectation Value 28
D.0.3 Note on Imaginary Part 29

Chapter 1

Introduction

1.1 Problem Statement and Motivation

Quantum algorithms have demonstrated the potential for significant computational speedups over their classical counterparts. Prominent examples include the Quantum Fourier Transform (QFT) [1] and the Harrow–Hassidim–Lloyd (HHL) algorithm for solving linear systems of equations[2] that have an exponential improvement in the computational complexity. However, the implementation of these large-scale algorithms requires a fault-tolerant quantum computer, a technology that remains a distant goal in the near future. Current quantum devices face serious constraints, including limited qubit counts, high noise levels and short coherence times that restrict circuit depth. This environment is famously known as the Noisy Intermediate-Scale Quantum (NISQ) era [3].

To extract value from these limited devices, several computational paradigms have been developed. Among the most prominent are Variational Quantum Algorithms (VQAs) [4]. VQAs are hybrid quantum-classical approaches that have been applied to a wide array of tasks, such as Quantum Machine Learning [5], molecular ground-state estimation [6], and quantum field theory simulations [7].

However, VQAs introduce a significant trade-off. While they use shallow circuits, they rely on a costly classical optimization loop that requires executing and measuring *several* circuit instances and observables, a process that does not necessarily scale efficiently. This extensive overhead can make demonstrating a definitive quantum advantage over classical methods difficult [8]. Furthermore, VQAs inherit other intrinsic problems from their variational formulation, particularly concerning their trainability and expressibility. One of the most critical issues is the *Barren Plateau (BP)* phenomenon. BPs are regions in the parameter landscape where the cost function's gradient vanishes exponentially with the number of qubits, rendering the algorithm untrainable as the system dimension increases [9].

To address these limitations, this thesis proposes the development of variational versions of known Fault-Tolerant (FT) quantum algorithms, specifically focusing on Quantum Phase Estimation (QPE). The central hypothesis is that by building variational algorithms upon a structure with a known analytical complexity and well-defined error bounds, we can ensure several trainability criterias in concrete VQAs. This approach aims to combine the NISQ-friendly nature of variational methods with the provable performance of established FT algorithms.

1.2 Objectives

1.2.1 General Objective

Design and implement a Variational version of the Quantum Phase Estimation algorithm, assessing its trainability and performance for estimating energies in physical systems.

1.2.2 Specific Objectives

- **Implementation & Architecture:** Design the proposed variational algorithm utilizing the Quantum Information Software Kit (Qiskit) created by IBM [10], and evaluate how different ansatz architectures impact on the circuit expressibility.
- **Trainability Analysis:** Numerically and analytically investigate the cost function's gradient variance across different unitary classes (e.g., Hamiltonian-generated unitaries) to determine conditions for Barren Plateaus.
- **Validation:** Apply the algorithm to estimate eigenvalues of Hamiltonians describing physical systems, such as Ising spin models and the electronic structure of molecules.
- **Benchmarking:** Conduct a comparative resource analysis between the proposed variational approach, the quantum phase estimation [1] and the iterative quantum phase estimation [11].

Chapter 2

Proposed Methodology

This research employs a combination of rigorous theoretical analysis and numerical simulation to design and validate the proposed Variational Quantum Phase Estimation (VQPE) algorithm.

2.1 Theoretical Framework

In order to formulate a variational approach to the QPE, we first introduce the concept of cost function for many VQAs, often used as a baseline for Barren Plateau (BP) analysis. In general, we associate the cost function as the expectation value of an observable O:

$$C(\boldsymbol{\theta}) = \mathrm{Tr}[OV(\boldsymbol{\theta})\rho V^{\dagger}(\boldsymbol{\theta})] \tag{2.1}$$

where $\rho = |\psi_0\rangle \langle\psi_0|$ is the initial state, $V(\boldsymbol{\theta})$ is the PQC, and O is the observable associated with the phase estimation. A primary focus will be the analytical study of Barren Plateaus (BP). We will analyze the variance of the cost function's gradient:

$$\mathrm{Var}\left(\frac{\partial C}{\partial \theta_k}\right) \tag{2.2}$$

A circuit is said to exhibit a BP if this variance decays exponentially with the number of qubits, n, (e.g., if $\mathrm{Var}\left(\frac{\partial C}{\partial \theta_k}\right) \sim \mathcal{O}(2^{-n})$), as this renders the gradient unmeasurable in practice. We will investigate the conditions (ansatz structure, depth, cost function locality) that lead to this behavior in our VQPE circuit.

2.1.1 Variational Quantum Amplification (VQAmp)

As discussed in the previous chapter, one of the main issues with standard QPE algorithms is that performing them requires *knowing* the eigenstate associated with the unitary gate U. If this condition is not satisfied, the outcome over the sampling will have peaks localized in the eigenvalues associated with the initial state's components.

By *exploiting* this fact, we will implement our cost function as the maximization of the most relevant probability peak, that is:

$$C\left(\vec{\theta}\right) = \underset{k\in 2^n}{\mathrm{argmax}}\{|\langle\psi_k|V(\vec{\theta})|\psi_0)|^2\rangle\} \tag{2.3}$$

This cost function is designed to optimize the PQC to converge on parameters $\vec{\theta}$ that prepare a single eigenstate $|\psi_k\rangle$ of the unitary U matrix, by maximizing its probability amplitude. With

these ingredients, we have the conditions to propose a hybrid quantum-classical algorithm of the Variational Quantum Phase Estimation (VQPE), which reframes the QPE problem into a variational form suitable for NISQ devices. To this associated variational cost function we will denominated it to as a Variational Quantum Amplification (VQAmp). A modification of the QPE algorithm is proposed as it follows:

1. **State Preparation:** A Parametrized Quantum Circuit (PQC), $V(\boldsymbol{\theta})$, acts as the variational *ansatz*. Its goal is to prepare an eigenstate $|\psi_k\rangle$ of the target unitary U, starting from a simple initial state $|\phi_0\rangle$. The initialization and the application of the $V(\boldsymbol{\theta})$ are performed at the $\mathcal{H}_B$ subsystem.

2. **Phase Measurement:** The standard QPE circuit is applied to the state prepared by the ansatz. This circuit non-destructively measures the phase ϕ_k associated with the prepared eigenstate $|\psi_k\rangle$ [12].

An instance of the full circuit is illustrated in Figure 2.1.

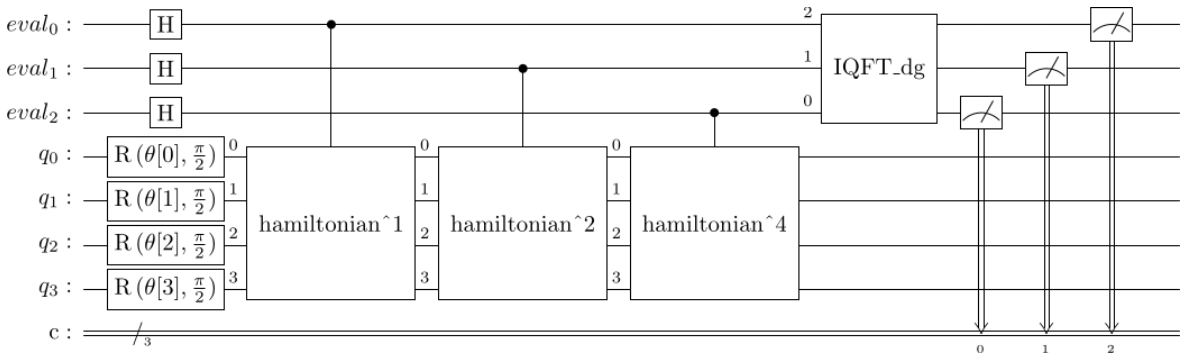

Figure 2.1: VQPE circuit diagram for 3 estimating qubits ($n_A = 3$) and a 4 qubit system ($n_B = 4$). The ansatz in this figure is the section of the $RY(\vec{\theta})$ rotations applied over the q_i qubits, $V(\vec{\theta}) = \prod_{k=0}^{3} \exp(-i\theta_k Y_k)$ with the rotating angles as optimization parameters.

As an example on how the cost function scheme works, we execute this algorithm for the quantum circuit shown in the figure 2.1 for a 4 qubit local Hamiltonian 4.1 discussed below. By executing this PQC several instances and optimizing it, can be observed that once the most probable outcome is choose to be optimized, the PQC will increase this probability, obtaining in some cases, the maximal value of 1. An ilustration of this optimization process is shown in 2.2.

2.1.2 Estimator function

As usual, one of the practical cases of VQA is to embed the problem such that the cost function to minimize is a given Hamiltonian H, i.e.

$$C(\boldsymbol{\theta}) = \min_{\boldsymbol{\theta}} \langle \hat{H} \rangle \tag{2.4}$$

Several algorithms does this, such as VQE, ADAPT-VQE and blablabla. Here, we can implement this cost function as it follows: given that $\hat{H}\,|\psi_k\rangle = E_k\,|\psi_k\rangle$, we can utilize the definition of the (unbiased) Estimator as:

$$\langle \hat{H} \rangle = \sum_k E_k p_k \tag{2.5}$$

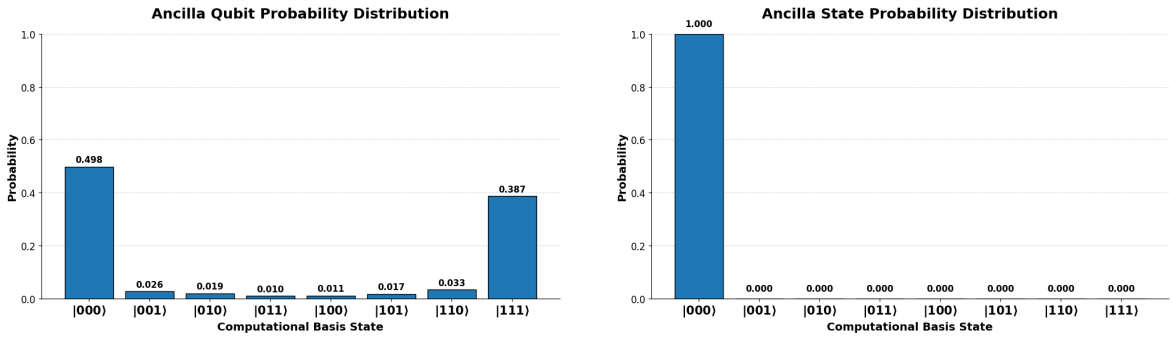

(a) (b)

Figure 2.2: Probability distribution of the measured qubit system for the VQPE algorithm shown in Figure 2.1. (a) At the initialization of the quantum circuit, utilizing random initial conditions for the parameter vector (rotation angles of the RY gates). The initial state is a linear combination of the U matrix eigenstates. In this example, the highest outcome corresponds to the $|000\rangle$ state. (b) After the optimization of the probability amplitude is complete, we observe that the probability of the $|000\rangle$ state is maximized, as it corresponds to the eigenstate associated with the eigenvalue 0. This sampling was obtained using the `qiskit_aer` Sampler with 2^{12} shots.

With the past discussion, we observed that this p_k is a function of our parametrized ansatz. So the variational cost function can be planted as:

$$C(\boldsymbol{\theta}) = \min_{\boldsymbol{\theta}} \langle \hat{H} \rangle = \min_{\boldsymbol{\theta}} \sum_k E_k \cdot p_k(\boldsymbol{\theta}) \tag{2.6}$$

Thus, extending the formalism to utilize it not only as a VQAmp, but also as an estimator.

2.2 Numerical Approach

The numerical implementation will be developed using Python and the Qiskit (v2.X.X) framework, particularly its `Qiskit Machine Learning` and `Qiskit Aer` modules [10]. These libraries are specificly utilized to

- Construct the VQPE and the several functionalities associated to the code
- Estimate the gradient of the associated cost function via parameter-shift rule. [13]
- Simulate and generate the samples used to analyze these circuits.

We will construct PQCs to execute the VQPE and explore the robustness of our algorithm *against* BPs. The objective is to determine the conditions under which these circuits are trainable, analyzing the influence of the ansatz, the number of ancilla qubits, and the system's dimensionality. Simulations will first be run on classical simulators, with validated circuits later transpiled for execution on real QPUs, if possible.

Chapter 3

Theoretical Background

3.1 Quantum Phase Estimation Algorithm

The Quantum Phase Estimation [1] (QPE) algorithm is designed to estimate the phase ϕ of an eigenvalue $e^{i\phi}$ corresponding to an eigenstate $|\psi\rangle$ of a unitary operator U. The algorithm utilizes two quantum registers: an ancilla register of n_A qubits to store the phase, and a target register initialized in the state $|\psi\rangle$, such that $U|\psi\rangle = e^{i\phi}|\psi\rangle$. By using n_A qubits to encode the phase and an n_B-qubit system to initialize the eigenstate $|\psi\rangle$, the QPE algorithm implements the following transformation:

$$QPE \quad |0\rangle^{\otimes n_A} \otimes |\psi\rangle \rightarrow |\phi\rangle \otimes |\psi\rangle \tag{3.1}$$

where $|\phi\rangle$ is the binary encoding of the phase associated with the eigenstate $|\psi\rangle$, stored as an n_A-qubit computational basis vector. The goal is to obtain an estimate satisfying:

$$\phi \approx \frac{k}{2^{n_A}} \cdot 2\pi. \tag{3.2}$$

Measuring the ancilla register yields the integer k with high probability, allowing the retrieval of the phase ϕ. Before detailing the algorithm, we recall the definition of the QFT for an n-qubit quantum system. For a computational basis state $|x\rangle$ of n qubits with $N = 2^n$, the QFT is defined as:

$$QFT\,|x\rangle = \frac{1}{\sqrt{N}} \sum_{k=0}^{N-1} e^{2\pi i\, xk/N}\,|k\rangle\,. \tag{3.3}$$

The algorithm is implemented in three stages, followed by a measurement.

1. Initialization:

We begin with both registers initialized. The ancilla register $\mathcal{H}_A$ starts in the zero state, and the state register $\mathcal{H}_B$ is prepared in the eigenstate $|\psi\rangle$.

$$|\Psi_0\rangle = |0\rangle_{\mathcal{H}_A} \otimes |\psi\rangle_{\mathcal{H}_B} \tag{3.4}$$

First, we apply a Hadamard gate (H) to each of the n_A ancilla qubits. Let $N_A = 2^{n_A}$.

$$|\Psi_1\rangle = (H^{\otimes n_A}\,|0\rangle^{\otimes n_A}) \otimes |\psi\rangle = \left(\frac{1}{\sqrt{N_A}} \sum_{k=0}^{N_A-1} |k\rangle\right) \otimes |\psi\rangle \tag{3.5}$$

2. Controlled Unitary Operations:

We apply a series of controlled U operations, where the j-th ancilla qubit controls the unitary

U^{2^j} on the state register. This transforms the state $|\Psi_1\rangle$ as follows:

$$
\begin{aligned}
|\Psi_2\rangle &= \left(\prod_{j=0}^{n_A-1} C_j(U^{2^j})\right)|\Psi_1\rangle \\
&= \frac{1}{\sqrt{N_A}} \sum_{k=0}^{N_A-1} |k\rangle \otimes (U^k |\psi\rangle) \qquad (3.6) \\
&= \frac{1}{\sqrt{N_A}} \sum_{k=0}^{N_A-1} |k\rangle \otimes (e^{ik\phi} |\psi\rangle) \\
&= \left(\frac{1}{\sqrt{N_A}} \sum_{k=0}^{N_A-1} e^{2\pi i k\left(\frac{\phi}{2\pi}\right)} |k\rangle\right) \otimes |\psi\rangle \qquad (3.7)
\end{aligned}
$$

The crucial step is line (3.6). The product of controlled operators applies U a total of $k = \sum_{j=0}^{n_A-1} k_j 2^j$ times. Note that in the last line, we rewrote the phase term $e^{ik\phi}$ as $e^{2\pi i k(\phi/2\pi)}$ to highlight the structure required for the Inverse Quantum Fourier Transform.

3. Inverse Quantum Fourier Transform (IQFT):
The state of the ancilla register is now explicitly in the Fourier basis encoding the value $\frac{\phi}{2\pi}$. To extract this value, we apply the Inverse Quantum Fourier Transform ($QFT^\dagger$) to the ancilla register $\mathcal{H}_A$.

$$
\begin{aligned}
|\Psi_3\rangle &= (QFT^\dagger \otimes \mathbb{I})|\Psi_2\rangle \\
&= \left(QFT^\dagger \left[\frac{1}{\sqrt{N_A}} \sum_{k=0}^{N_A-1} e^{2\pi i k\left(\frac{\phi}{2\pi}\right)} |k\rangle\right]\right) \otimes |\psi\rangle
\end{aligned}
$$

Assuming the phase ϕ can be represented exactly with n_A bits, such that $\frac{\phi}{2\pi} = \frac{y}{2^{n_A}}$ for some integer y, the IQFT maps the superposition to a single basis state:

$$
|\Psi_3\rangle = |y\rangle_{\mathcal{H}_A} \otimes |\psi\rangle_{\mathcal{H}_B} \qquad (3.8)
$$

Measuring the ancilla register yields the integer y, from which we estimate the phase as $\phi \approx \frac{y}{2^{n_A}} 2\pi$.

As an illustration, the quantum circuit that implements this algorithm is shown in Figure **??** below.

3.1.1 Limitations and Error Sources in Standard QPE

While powerful, the standard QPE algorithm has features that make it infeasible for current NISQ devices.

- **Hardware Resource Requirements:** The algorithm requires deep circuits, involving a large number of controlled operations and a final high-precision $QFT^\dagger$. This circuit depth is far beyond the capabilities of NISQ hardware, which is limited by noise and decoherence. Experimental implementationsof the QPE algorithm utilizing 4 qubits in total ($n_A = 3, n_B = 1$) was made for neutral atoms [14]. Several NISQ-friendly variants of the QPE algorithm has been designed and implemented, such as modifications of the Iterative Quantum Phase Estimation (IQPE) has also been implemented in superconductors superconductor circuits with 3 ($n_A = 1, n_B = 2$) Xmon transmon qubits [15]

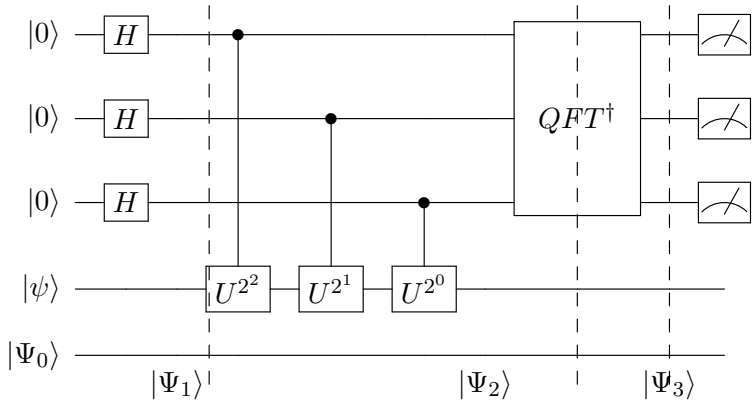

Figure 3.1: Circuito del algoritmo QPE mostrando los estados intermedios.

Talk about the experimental implementation of controlled U^j gate implementation is possible.

- **Known Eigenstate Assumption:** The standard algorithm assumes that the state register can be prepared in the exact eigenstate $|\psi\rangle$. In many practical problems (like finding a Hamiltonian's ground state), preparing this state is, in fact, the problem itself.

- **Input State Error:** If the input state is not a perfect eigenstate but a superposition of eigenstates, $|\psi\rangle = \sum_k c_k |\phi_k\rangle$, the final measurement will yield a probability distribution $P(\tilde{\phi}) = \sum_k |c_k|^2 P_k(\tilde{\phi})$, where P_k is the probability of measuring $\tilde{\phi}$ given the eigenstate $|\phi_k\rangle$.

- **Representation Error:** If the true phase ϕ cannot be exactly represented by n_A bits (e.g., if it is irrational or if the number has a b_N bit representation and $b_N > n_A$), the measurement will not be a single peak but a $\sim \sin(x)/x$ distribution, introducing an intrinsic error. More precisely, this error is given by [16]:

$$P_{\phi_u}(0.\phi) = \begin{cases} 1 & \Delta\phi = \phi_u - 0.\phi = 0 \\ \frac{g(0.\phi)}{2^t} = \frac{1}{2^t}\frac{\sin^2(2^t\pi(\phi_u - 0.\phi))}{\sin^2(\pi(\phi_u - 0.\phi))} & \Delta\phi = \phi_u - 0.\phi \neq 0. \end{cases} \tag{3.9}$$

It is also worth to mention that, if we want to estimate the phase $0.\phi$ with a error of ϵ, then the number of ancilla qubits needed to ensure this precision is given by: $n_{\text{meas}} = \lceil \log(1/\epsilon) \rceil$ [1].

DEFINIR ERROR EPSILON Y PRECISION P
Along this work, we are going to study in how these challenges can be overcome.

Chapter 4

Work in progress

4.1 Problem Statement

As a first approach, we will study the trainability in a Hamiltonian that is known to be trainable under some assumptions. Consider the problem of estimating the ground state of a local autoencoder Hamiltonian [17]:

$$H = \mathbb{I}^{\otimes n} - \frac{1}{n}\sum_{j=0}^{n-1} |0\rangle\langle 0|_j \tag{4.1}$$

where $|0\rangle\langle 0|_j = \frac{1}{2}(\mathbb{I} - Z_j)$ is the zero state projector of the j-th qubit. A well-behave property of this Hamiltonian is that its spectrum is of the form:

$$\sigma = \{k \in \mathbb{N}_0 : \lambda_k = k/n\} \tag{4.2}$$

with each of the eigenvalues λ_k having a multiplicity of $\binom{n}{k}$. See appendix B for a detailed explanation. The fact that the spectrum is equidistant from each other makes the landscape of eigenvalues not narrow, making it more robust against BP.

For our ansatz selection, we implement a tensor-product ansatz of the form

$$\mathcal{U}\left(\vec{\theta}\right) = \bigotimes_{j=0}^{n-1} \exp\left(-i\theta_j X_j/2\right) \tag{4.3}$$

and as initial state the $|\mathbf{0}\rangle = |0\rangle^{\otimes n}$. As a proof of concept, we will start by stuyding the trainability for the VQAmp instance.

4.1.1 Variational Quantum Amplifiers

The variational quantum amplifier (VQAmp) uses a variational circuit $U(\boldsymbol{\theta})$ followed by Quantum Phase Estimation (QPE) to amplify the overlap with a target state, which for concreteness we take as $|0^n\rangle$. The input state is written as:

$$|\psi_0\rangle = \sqrt{F}|0^n\rangle + \sqrt{1-F}|\chi\rangle, \tag{4.4}$$

where F is the fidelity with the target and $\langle 0^n|\chi\rangle = 0$. As particular case we consider the state of $|\chi\rangle = \sum_{k=1}^{2^n-1} |k\rangle$ The cost function is defined as the amplified probability of the target:

$$C(\boldsymbol{\theta}) = |\langle 0^n|V(\boldsymbol{\theta})|\psi_0\rangle|^2. \tag{4.5}$$

QPE then converts this probability into a measurable phase signal. The important point is that the gradient of this cost function with respect to the parameters has a variance that is directly controlled by F and by the distribution of parameters. Under certain conditions, as derived below, this structure avoids exponential suppression of the gradients.

4.1.2 Gradient Variance and Trainability

Consider an ansatz composed of L layers of single-qubit R_Y rotations, each layer followed by an entangling layer of CNOTs. The total number of rotation parameters is $P = nL$, where n is the number of qubits. Since CNOT layers preserve the $|0^n\rangle$ branch, the contribution to the target amplitude is given by:

$$A_0(\boldsymbol{\theta}) = \sqrt{F} \prod_{p=1}^{P} \cos\left(\frac{\theta_p}{2}\right). \tag{4.6}$$

The cost function is therefore $C(\boldsymbol{\theta}) \approx |A_0|^2$ when the orthogonal component is neglected. Differentiating with respect to a parameter θ_p yields:

$$g_p(\boldsymbol{\theta}) = -F \left(\prod_{q=1}^{P} \cos^2 \frac{\theta_q}{2}\right) \tan \frac{\theta_p}{2}. \tag{4.7}$$

If the parameters are drawn from independent Gaussian distributions $\mathcal{N}(0, \sigma^2)$, the variance of the gradient can be expressed in terms of two single-parameter expectations:

$$\mathrm{Var}(g_p) = F^2 m_1^{P-1} m_2, \tag{4.8}$$

where:

$$m_1 = \mathbb{E}\left[\cos^4 \frac{\theta}{2}\right] = \frac{3 + 4e^{-\sigma^2/2} + e^{-2\sigma^2}}{8}, \quad m_2 = \mathbb{E}\left[\cos^2 \frac{\theta}{2} \sin^2 \frac{\theta}{2}\right] = \frac{1 - e^{-2\sigma^2}}{8}. \tag{4.9}$$

See appendix C for further details. For small σ, this simplifies to:

$$\mathrm{Var}(g_p) \approx F^2 \frac{\sigma^2}{4} \exp\left(-\frac{P-1}{2}\sigma^2\right). \tag{4.10}$$

This result has crucial implications for trainability:

- If σ is constant while n and L grow, the variance decays exponentially in $P = nL$, reproducing the barren plateau problem.
- However, if σ^2 scales as $1/P$, then the exponential suppression is avoided. The variance is maximized near $\sigma^2 \approx 2/P$, where it scales as $F^2/(2eP)$.

This scaling is only polynomially small, meaning the barren plateau is avoided. Conversely, if σ is very large, the variance approaches the limit $F^2(1/8)(3/8)^{P-1}$, which decays exponentially in P. These results demonstrate that the variational amplifier has a regime of trainability absent in generic variational circuits, provided that the fidelity F with the target is nonzero and the distribution of variational parameters has variance tuned to scale as $1/(nL)$.

We perform Numerical simulations for the search of this specific BP in the proposed VQAmp circuit. In order to achieve this, we did the following:

4.1.3 Initialization strategy

with a fixed number of $n_A = 5$ ancilla qubits, we initialize the VQAmp algorithm for several values of the initial fidelity F and several values of the variance of the gaussian distribution of the parameters, σ initialization.

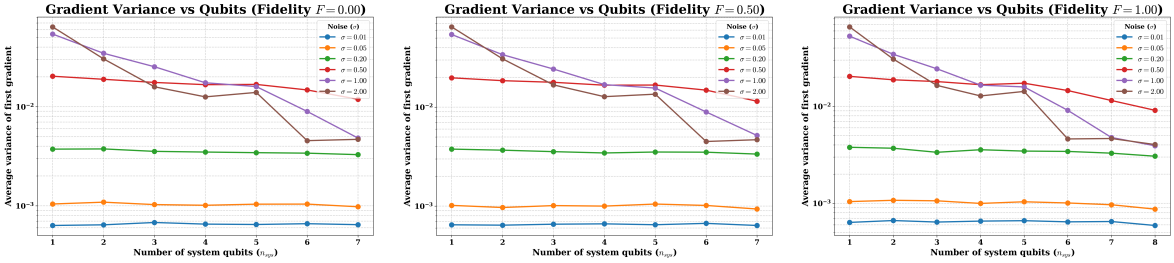

(a) (b) (c)

Figure 4.1: Numerical analysis of the Variance of the cost function for several values of the fidelity F: (a) $F = 0$, (b) $F = 0.5$ and (c) $F = 1$

It can be observed that, as the σ parameter is increased, the Variance of the cost function behaves as a BP.

4.2 Variational Quantum Phase Estimators

4.2.1 Comparation with VQE

As previously mentioned, the problem of estimating the expected value of an arbitrary Hamiltonian is computationally efficient in a QPU. Nonetheless how *"good"* is this efficient method depends highly in both Hardware and Software topics. From an algorithmic approach, the number of operators needed and the precision obtained highly depens in which algoritmh is being used. As discussed in [1, 18], utilizing QPE for estimating energies of a given Hamiltonian requieres a number of circuit depth that is upper-bounded by $\mathcal{O}(p^{-1})$ if a precision p is desired. (This arises mainly from the implementation of the Controlled-U's operators, for $U = \exp(-itH)$. Notice that this can also be modified if further approximations are considered, such as second or fourth order of the Lie Trotter Formula for implementations in quantum circuits [19]). Meanwhile as discussed in [6], the estimation of a Hamiltonian expressed in the Pauli string basis $H = \sum_{i=1}^{M} h_i P_i$ has a computational cost of $\mathcal{O}(|h_{max}|^2 M p^{-2})$, where $h_{max} \equiv \max_i\{h_i\}$ and M is the number of terms that the Hamiltonian has. Notice that it is evident that algorithms that implement this subroutine, such as VQE or ADAPT-VQE type or naive estimation of cost functions in VQAs, has a quadratically scalling of circuits to need runned in order to achieve a precision p. As a consequanece of this, the utilization of the VQE should need more circuit executions than the VQPE algorithm for a fixex precision p. An Ilustration on how the VQPE leverages this cuadratic speedup with respect to VQE is by minimizing the Hamiltonian expressed in Eq. (4.1), as was early discussed in the theoretical section.

Hagamos el amplificador y hago un VQAmp (convenviconal) no se puede hacer debido a que se necesitaria obtener el target y se necesita conocer el estado.

Lo de esto del QPEVQAmp no necesita esto + converge mas rapido por el tema de la varianza

ADAPT-VQAmp deberia que ser mejor que el otro

(compararlo con quantum control por ejemplo)

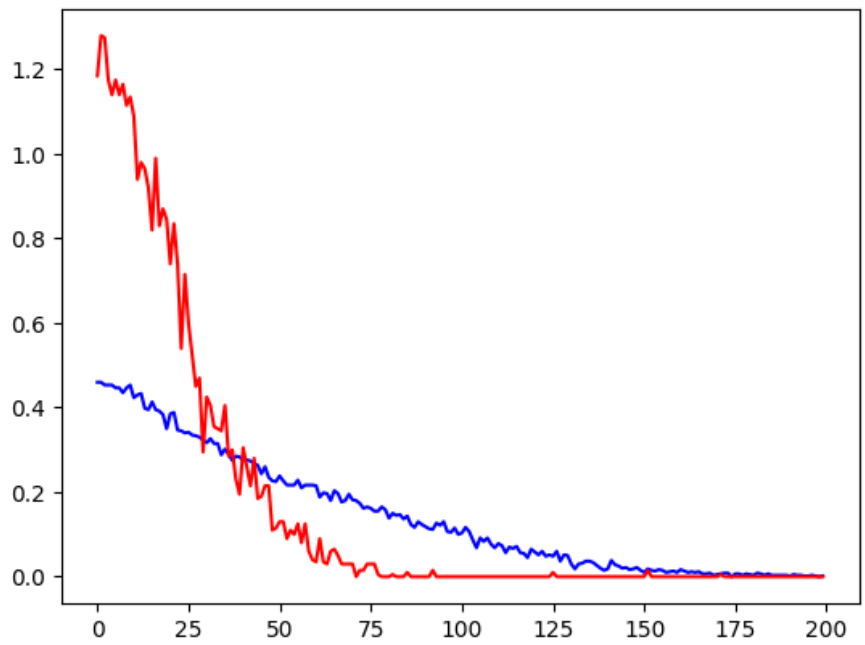

Figure 4.2: VQE vs VQPE energy convergence. This is the mean value for a number of 10 random instances.

4.3 Analytical Results

4.3.1 Gradient of the Amplificator Cost Function

Inspired by the work of [8], we search for a closed-form method for estimating gradients in quantum computers. Once our cost function is defined to obtain a fixed eigenvalue k, $f(\vec{\theta}) = \lambda_k(\vec{\theta})$, this can be formulated to maximize the Fidelity or probability to obtain the associated eigenstate $|\psi_k\rangle$ with our ansatz:

$$f\left(\vec{\theta}\right) = \max\{|\langle\psi_k|\mathcal{U}\left(\vec{\theta}\right)|\phi_0\rangle|^2\} \tag{4.11}$$

where $|\phi_0\rangle$ is the initial state associated to it.

To make the analytical computation of the gradient associated to this function, we will make an assumption that the initial set of parameters is arbitrarily close to the zero vector: $\|\vec{\theta}_{\text{init}} - \vec{0}\| < \epsilon$. This condition implies that each of the components is much less than 1, $\theta_k \ll 1 \quad \forall k$. By considering that our ansatz has the form of:

$$\mathcal{U}\left(\vec{\theta}\right) = \prod_k e^{i\theta_k G_k} \approx \mathbb{I} + i\sum_k \theta_k G_k \tag{4.12}$$

Where G_k are the generators of the parametrized rotation gates of the ansatz. By computing the derivative with respect to θ_k, we obtain:

$$\frac{\partial\mathcal{U}}{\partial\theta_k} = iG_k, \quad \frac{\partial\mathcal{U}^\dagger}{\partial\theta_k} = -iG_k \tag{4.13}$$

By direct computation of the variation of Eq. (4.11) with respect to θ_k, we obtain:

$$\frac{\partial f}{\partial \theta_l} = \langle \psi_k | \frac{\partial \mathcal{U}}{\partial \theta_l} | \phi_0 \rangle \langle \phi_0 | \mathcal{U}^\dagger | \psi_k \rangle + \langle \psi_k | \mathcal{U} | \phi_0 \rangle \langle \phi_0 | \frac{\partial \mathcal{U}^\dagger}{\partial \theta_l} | \psi_k \rangle \tag{4.14}$$

$$\left.\frac{\partial f}{\partial \theta_l}\right|_{\vec{\theta}=0} = i \langle \psi_k | G_l | \phi_0 \rangle \langle \phi_0 | \psi_k \rangle - i \langle \psi_k | \phi_0 \rangle \langle \phi_0 | G_l | \psi_k \rangle \tag{4.15}$$

Expanding $|\phi_0\rangle$ in the eigenbasis $\{|\psi_k\rangle\}_{k=0}^d$ as $|\phi_0\rangle = \sum_j c_j |\psi_j\rangle$, we have $\langle \phi_0 | \psi_k \rangle = c_k^*$. Finally:

$$\begin{aligned} \left.\frac{\partial f}{\partial \theta_l}\right|_{\vec{\theta}=0} &= i \langle \psi_k | G_l | \phi_0 \rangle c_k^* - i \langle \phi_0 | G_l | \psi_k \rangle c_k \\ &= 2\,\mathrm{Re}\{ i \langle \psi_k | G_l | \phi_0 \rangle c_k^* \} \end{aligned} \tag{4.16}$$

The form of this gradient suggests that it can be computed with a quantum circuit utilizing a variation of the Hadamard Test [1]. Several works have also explored how to efficiently estimate these derivatives and higher-order ones in terms of expectation values, also utilizing generalizations of the Hadamard Test [20].

Let us consider a Hamiltonian H such that $H|\psi_k\rangle = \lambda_k |\psi_k\rangle$. By implementing this Hamiltonian as the generator of the unitary matrix for the QPE subroutine, then by spectral theorem we obtain: $V = \exp\{-iH\} \to V|\psi_k\rangle = \exp\{-i\lambda_k\}|\psi_k\rangle$.

The eigenvalues are encoded in the phase to estimate, as discussed. By composing the modified Hadamard Test circuit to our VQAmp circuit, we obtain:

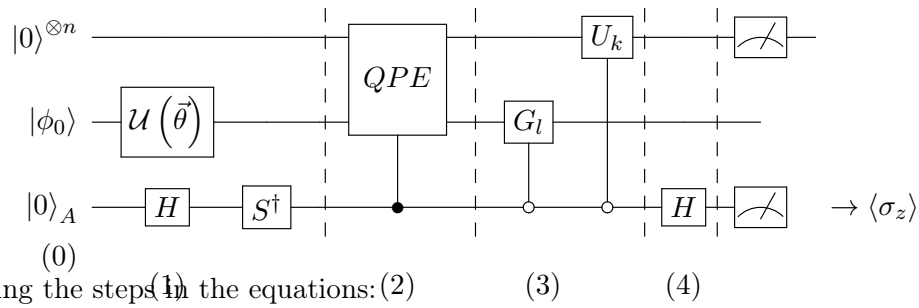

Following the steps in the equations:

$$(0): \quad |\Psi_0\rangle = |0\rangle^{\otimes n} \otimes |\phi_0\rangle \otimes |0\rangle_A \tag{4.17}$$

$$(1): \quad |\Psi_1\rangle = |0\rangle^{\otimes n} \otimes \left(\mathcal{U}\left(\vec{\theta}\right)|\phi_0\rangle\right) \otimes \left[\frac{1}{\sqrt{2}}\left(|0\rangle - i|1\rangle\right)\right] \tag{4.18}$$

$$(2): \quad |\Psi_2\rangle = \frac{1}{\sqrt{2}}\left(|0\rangle^{\otimes n} \otimes \left(\mathcal{U}\left(\vec{\theta}\right)|\phi_0\rangle\right) \otimes |0\rangle - i\sum_{k'} c_{k'} |\lambda_{k'}\rangle \otimes \mathcal{U}\left(\vec{\theta}\right)|\psi_k\rangle \otimes |1\rangle\right) \tag{4.19}$$

$$(3): \quad |\Psi_3\rangle = \frac{1}{\sqrt{2}}\left(\underbrace{U_k |0\rangle^{\otimes n}}_{=|\lambda_k\rangle} \otimes G_l |\phi(\vec{\theta})\rangle \otimes |0\rangle - i\sum_{k'} c_{k'} |\lambda_{k'}\rangle \otimes \mathcal{U}\left(\vec{\theta}\right)|\psi_k\rangle \otimes |1\rangle\right) \tag{4.20}$$

where we have defined $|\phi(\vec{\theta})\rangle = \mathcal{U}(\vec{\theta})|\phi_0\rangle$. Measuring/Projecting over $\langle \lambda_k | \otimes \mathbb{I} \otimes \mathbb{I}$:

$$(3): \quad |\Psi_{3.2}\rangle = \mathcal{N}\frac{1}{\sqrt{2}}\left(G_l\,|\phi(\vec{\theta})\rangle \otimes |0\rangle - ic_k\mathcal{U}\left(\vec{\theta}\right)|\psi_k\rangle \otimes |1\rangle\right) \tag{4.21}$$

$$(4): \quad |\Psi_4\rangle = \mathcal{N}\frac{1}{\sqrt{2}}\left(G_l\,|\phi(\vec{\theta})\rangle \otimes |+\rangle - ic_k\mathcal{U}\left(\vec{\theta}\right)|\psi_k\rangle \otimes |-\rangle\right) \tag{4.22}$$

$$\begin{aligned} &= \mathcal{N}\frac{1}{2}\Big\{\Big[G_l\,|\phi(\vec{\theta})\rangle - ic_k\mathcal{U}\left(\vec{\theta}\right)|\psi_k\rangle\Big] \otimes |0\rangle \\ &\quad + \Big[G_l\,|\phi(\vec{\theta})\rangle + ic_k\mathcal{U}\left(\vec{\theta}\right)|\psi_k\rangle\Big] \otimes |1\rangle\Big\} \end{aligned} \tag{4.23}$$

From this last expression, the probability amplitude of measuring the ancilla qubit in the $|0\rangle$ state is:

$$\begin{aligned} p_+ \equiv P(|l\rangle_A = |0\rangle) &= \frac{1}{4}\left|G_\ell\,|\phi(\vec{\theta})\rangle - ic_k U(\vec{\theta})\,|\psi_k\rangle\right|^2 \\ &= \frac{1}{4}\Big(\langle\phi(\vec{\theta})|\,G_\ell^\dagger G_\ell\,|\phi(\vec{\theta})\rangle + |c_k|^2\,\langle\psi_k|\,U^\dagger(\vec{\theta})U(\vec{\theta})\,|\psi_k\rangle \\ &\quad +2\,\mathrm{Re}\left\{ic_k^*\,\langle\psi_k|\,U^\dagger(\vec{\theta})G_\ell\,|\phi(\vec{\theta})\rangle\right\}\Big) \\ &= \frac{1}{4}\left(1 + |c_k|^2 + 2\,\mathrm{Re}\left\{ic_k^*\,\langle\psi_k|\,U^\dagger(\vec{\theta})G_\ell\,|\phi(\vec{\theta})\rangle\right\}\right) \end{aligned}$$

Similarly, for the $|1\rangle$ state:

$$\begin{aligned} p_- \equiv P(|l\rangle_A = |1\rangle) &= \frac{1}{4}\left|G_\ell\,|\phi(\vec{\theta})\rangle + ic_k U(\vec{\theta})\,|\psi_k\rangle\right|^2 \\ &= \frac{1}{4}\left(1 + |c_k|^2 - 2\,\mathrm{Re}\left\{ic_k^*\,\langle\psi_k|\,U^\dagger(\vec{\theta})G_\ell\,|\phi(\vec{\theta})\rangle\right\}\right) \end{aligned}$$

Thus, the difference is:

$$\begin{aligned} P_+ - P_- &= \mathrm{Re}\left\{ic_k^*\,\langle\psi_k|\,U^\dagger(\vec{\theta})G_\ell\,|\phi(\vec{\theta})\rangle\right\} \\ &= \mathrm{Re}\left\{ic_k^*\,\langle\psi_k|\,U^\dagger(\vec{\theta})G_\ell U(\vec{\theta})\,|\phi_0\rangle\right\} \end{aligned}$$

By evaluating $\mathcal{U}\left(\vec{\theta} = \vec{0}\right) = \mathbb{I}$, it reduces to the gradient expression obtained before:

$$P_+ - P_- = \mathrm{Re}\left\{ic_k^*\,\langle\psi_k|\,G_\ell\,|\phi_0\rangle\right\} \tag{4.24}$$

An instance of this circuit implemented in Qiskit is shown below:

4.3.2 Generalization for non-zero parameter vector

As defined before, the cost function $C(\theta)$ associated to the VQAmp is given by:

$$C(\theta) = |\,\langle\psi_k|U(\theta)|\phi_0\rangle\,|^2 = \langle\phi_0|U^\dagger(\theta)|\psi_k\rangle\,\langle\psi_k|U(\theta)|\phi_0\rangle \tag{4.25}$$

By utilizing the fact that any unitary operator $U(\theta)$ can be generated by its associated generator $\hat{P} \in \mathcal{P}$, such that $\hat{P}^2 = \mathbb{I}$, and adopting the convention consistent with the previous section, we express this unitary operator as:

$$U(\theta) = \exp\left(i\theta\hat{P}\right) = \cos(\theta)\mathbb{I} + i\sin(\theta)\hat{P} \tag{4.26}$$

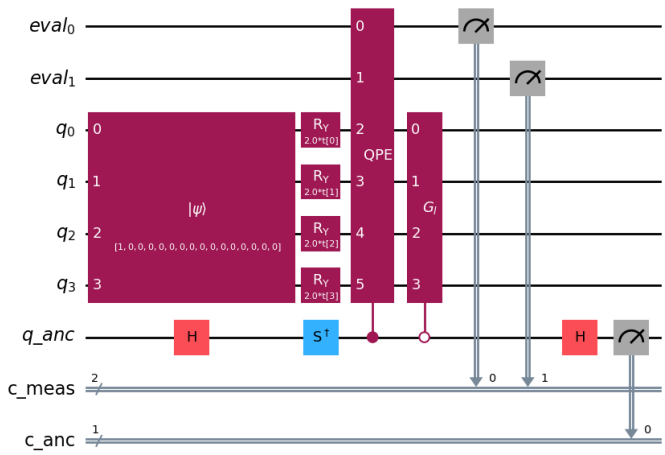

Figure 4.3: Implementation of the VQAmp quantum circuit + Hadamard Test with $n_A = 2$, $n_B = 4$ and one ancilla qubit q_{anc}. This circuit computes experimentally the gradient associated to the cost function of the VQAmp.

By straightforward computation, the derivatives of this unitary operator with respect to the θ parameter lead to:

$$\frac{\partial U(\theta)}{\partial \theta} = -\sin(\theta)\mathbb{I} + i\cos(\theta)\hat{P} \tag{4.27}$$

$$\frac{\partial U^\dagger(\theta)}{\partial \theta} = -\sin(\theta)\mathbb{I} - i\cos(\theta)\hat{P} \tag{4.28}$$

Utilizing the chain rule to compute the gradient of this cost function, we obtain:

$$\frac{\partial C(\theta)}{\partial \theta} = \left\langle \phi_0 \left| \frac{\partial U^\dagger(\theta)}{\partial \theta} \right| \psi_k \right\rangle \langle \psi_k | U(\theta) | \phi_0 \rangle + \text{h.c.} \tag{4.29}$$

By substituting expression (4.28) into equation (4.29), and utilizing the property $z + z^* = 2\,\text{Re}(z)$, the gradient can be succinctly expressed as:

$$\frac{\partial C(\theta)}{\partial \theta} = 2\,\text{Re}\left[\left\langle \phi_0 \left| \left(-\sin(\theta)\mathbb{I} - i\cos(\theta)\hat{P}\right) \right| \psi_k \right\rangle \langle \psi_k | U(\theta) | \phi_0 \rangle\right] \tag{4.30}$$

Expanding the inner product terms and separating the contributions proportional to $\sin(\theta)$ and $\cos(\theta)$, and subsequently applying the identity $\text{Re}(z) = \text{Re}(z^*)$ to the second term, we can rewrite the gradient as:

$$\begin{aligned}\frac{\partial C(\theta)}{\partial \theta} &= -2\sin(\theta)\,\text{Re}\left[\langle \phi_0 | \psi_k \rangle \langle \psi_k | U(\theta) | \phi_0 \rangle\right] \\ &\quad + 2\cos(\theta)\,\text{Re}\left[-i\,\langle \phi_0 | \hat{P} | \psi_k \rangle \langle \psi_k | U(\theta) | \phi_0 \rangle\right] \\ &= -2\sin(\theta)\,\text{Re}\left[\langle \phi_0 | \psi_k \rangle \langle \psi_k | U(\theta) | \phi_0 \rangle\right] \\ &\quad + 2\cos(\theta)\,\text{Re}\left[i\,\langle \psi_k | \hat{P} | \phi_0 \rangle \langle \phi_0 | U^\dagger(\theta) | \psi_k \rangle\right]\end{aligned} \tag{4.31}$$

We can now verify that this general expression recovers the local gradient approximation

derived in Eq. (4.16). In the limit $\theta \to 0$, we have $U(\theta) \to \mathbb{I}$, $\sin(\theta) \to 0$, and $\cos(\theta) \to 1$. The first term of Eq. (4.31) vanishes, and the second term simplifies directly to:

$$\lim_{\theta \to 0} \frac{\partial C(\theta)}{\partial \theta} = 2\,\mathrm{Re}\left[i \langle \psi_k | \hat{P} | \phi_0 \rangle \langle \phi_0 | \psi_k \rangle\right] \tag{4.32}$$

By identifying the projection $\langle \phi_0 | \psi_k \rangle$ with c_k^* and the generator $\hat{P}$ with G_l, we recover exactly the expression $2\,\mathrm{Re}[i \langle \psi_k | G_l | \phi_0 \rangle c_k^*]$, confirming the consistency with our previous local approximation.

4.3.3 Circuit estimation of the generalized gradient

As it can be seen from Eq. (4.31), the term that is ponderated by $\sin(\theta)$ can be efficiently be estimated. By inspection of the result of Eq. **??**, this term can be obtained by replacing $S^\dagger \to \mathbb{I}$ and $G_l \to \mathcal{U}(\vec{\theta})$. The quantum circuit that implements this is the Following:

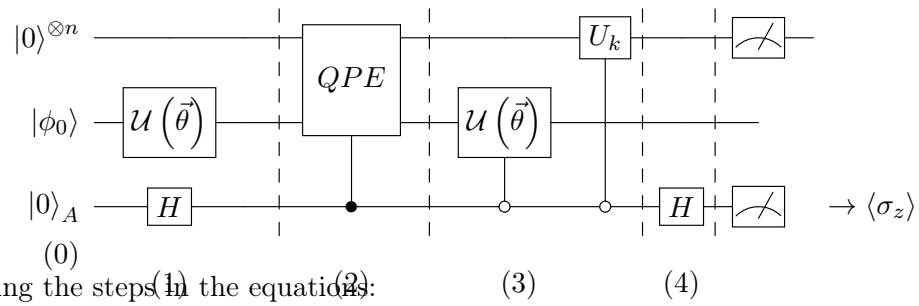

Following the steps in the equations:

$$(0): \quad |\Psi_0\rangle = |0\rangle^{\otimes n} \otimes |\phi_0\rangle \otimes |0\rangle_A \tag{4.33}$$

$$(1): \quad |\Psi_1\rangle = |0\rangle^{\otimes n} \otimes \left(\mathcal{U}\left(\vec{\theta}\right)|\phi_0\rangle\right) \otimes \left[\frac{1}{\sqrt{2}}\left(|0\rangle + |1\rangle\right)\right] \tag{4.34}$$

$$(2): \quad |\Psi_2\rangle = \frac{1}{\sqrt{2}}\left(|0\rangle^{\otimes n} \otimes \left(\mathcal{U}\left(\vec{\theta}\right)|\phi_0\rangle\right) \otimes |0\rangle + \sum_{k'} c_{k'}(\vec{\theta})\,|\lambda_{k'}\rangle \otimes \mathcal{U}\left(\vec{\theta}\right)|\psi_{k'}\rangle \otimes |1\rangle\right) \tag{4.35}$$

$$(3): \quad |\Psi_3\rangle = \frac{1}{\sqrt{2}}\left(\underbrace{U_k\,|0\rangle^{\otimes n}}_{=|\lambda_k\rangle} \otimes \mathcal{U}^2\left(\vec{\theta}\right)|\phi(\vec{\theta})\rangle \otimes |0\rangle - i\sum_{k'} c_{k'}\,|\lambda_{k'}\rangle \otimes \mathcal{U}\left(\vec{\theta}\right)|\psi_k\rangle \otimes |1\rangle\right) \tag{4.36}$$

In a similar way, if we project onto de $\langle \lambda_k | \otimes \mathbb{I} \otimes \mathbb{I}$, we retrieve the following state:

$$(3.2): \quad \frac{\mathcal{N}}{\sqrt{2}}\left[\mathcal{U}\left(\vec{\theta}\right)^2 |\phi_0\rangle \otimes |0\rangle + c_k \cdot \mathcal{U}\left(\vec{\theta}\right)|\psi_k\rangle \otimes |1\rangle\right] \tag{4.37}$$

Finally, by performing the last Hadamard to the Ancilla qubit we obtain the following state:

$$|\Psi_4\rangle = \frac{\mathcal{N}}{2}\left[\left(\mathcal{U}^2|\phi_0\rangle + c_k\mathcal{U}|\psi_k\rangle\right) \otimes |0\rangle + \left(\mathcal{U}^2|\phi_0\rangle - c_k\mathcal{U}|\psi_k\rangle\right) \otimes |1\rangle\right] \tag{4.38}$$

We define the unnormalized conditional states associated with the ancilla measurement outcomes as:

$$|\Phi_+\rangle = \mathcal{U}^2|\phi_0\rangle + c_k\mathcal{U}|\psi_k\rangle \tag{4.39}$$

$$|\Phi_-\rangle = \mathcal{U}^2|\phi_0\rangle - c_k\mathcal{U}|\psi_k\rangle \tag{4.40}$$

The probability of measuring $|0\rangle$ in the ancilla is:

$$\begin{aligned} P(|0\rangle_A) &= \left|\frac{\mathcal{N}}{2}\right|^2 \langle\Phi_+|\Phi_+\rangle \\ &= \frac{|\mathcal{N}|^2}{4}\Big(\langle\phi_0|\,(\mathcal{U}^2)^\dagger\mathcal{U}^2\,|\phi_0\rangle + |c_k|^2\,\langle\psi_k|\,\mathcal{U}^\dagger\mathcal{U}\,|\psi_k\rangle \\ &\quad + c_k^*\,\langle\psi_k|\,\mathcal{U}^\dagger\mathcal{U}^2\,|\phi_0\rangle + c_k\,\langle\phi_0|\,(\mathcal{U}^2)^\dagger\mathcal{U}\,|\psi_k\rangle\Big) \end{aligned} \tag{4.41}$$

Using the unitarity property $\mathcal{U}^\dagger\mathcal{U} = \mathbb{I}$, the cross terms simplify significantly. For example, $\mathcal{U}^\dagger\mathcal{U}^2 = \mathcal{U}$ and $(\mathcal{U}^2)^\dagger\mathcal{U} = \mathcal{U}^{-2}\mathcal{U} = \mathcal{U}^{-1} = \mathcal{U}^\dagger$. Thus:

$$P(|0\rangle_A) = \frac{|\mathcal{N}|^2}{4}\left(1 + |c_k|^2 + 2\,\mathrm{Re}\left\{c_k^*\,\langle\psi_k|\,\mathcal{U}(\vec{\theta})\,|\phi_0\rangle\right\}\right) \tag{4.42}$$

Similarly, for the $|1\rangle$ state, the cross terms have a negative sign:

$$P(|1\rangle_A) = \frac{|\mathcal{N}|^2}{4}\left(1 + |c_k|^2 - 2\,\mathrm{Re}\left\{c_k^*\,\langle\psi_k|\,\mathcal{U}(\vec{\theta})\,|\phi_0\rangle\right\}\right) \tag{4.43}$$

Finally, taking the difference between these probabilities isolates the real part of the transition amplitude:

$$\Delta P = P(|0\rangle_A) - P(|1\rangle_A) = |\mathcal{N}|^2\,\mathrm{Re}\left\{c_k^*\,\langle\psi_k|\,\mathcal{U}(\vec{\theta})\,|\phi_0\rangle\right\} \tag{4.44}$$

Which is the term proportional to $\sin\theta$ obtained in Eq. (4.31).

For the generalized $\cos\theta$ it is not necessary to compose a new circuit. By Substituting the expansion $U^\dagger(\theta) = \cos(\theta)\mathbb{I} - i\sin(\theta)\hat{P}$ into the expression, we can expand the inner product:

$$\begin{aligned} &2\cos(\theta)\,\mathrm{Re}\left[i\,\langle\psi_k|\hat{P}|\phi_0\rangle\,\langle\phi_0|U^\dagger(\theta)|\psi_k\rangle\right] \\ &= 2\cos(\theta)\,\mathrm{Re}\left[i\,\langle\psi_k|\hat{P}|\phi_0\rangle\left(\cos(\theta)\,\langle\phi_0|\psi_k\rangle - i\sin(\theta)\,\langle\phi_0|\hat{P}|\psi_k\rangle\right)\right] \\ &= 2\cos(\theta)\,\mathrm{Re}\left[i\cos(\theta)\,\langle\psi_k|\hat{P}|\phi_0\rangle\,\langle\phi_0|\psi_k\rangle + \sin(\theta)\left|\langle\phi_0|\hat{P}|\psi_k\rangle\right|^2\right] \\ &= \sin(2\theta)\left|\langle\phi_0|\hat{P}|\psi_k\rangle\right|^2 - 2\cos^2(\theta)\,\mathrm{Re}\left[i\,\langle\psi_k|\hat{P}|\phi_0\rangle\,\langle\phi_0|\psi_k\rangle\right] \end{aligned} \tag{4.45}$$

By analizing this expression, the term $\propto \sin(2\theta)$ can be efficiently be estimated in a quantum computer, meanwhile the term $\propto \cos\theta$ was already constructed in the last subsection. Nonetheless, i think that it should be possible to find a more closed expression.

4.3.4 Generalization for Multi-Layer Ansatz

In a more realistic VQA scenario, the unitary operator is not a single exponential but a sequence of parametrized quantum gates. Let us define the ansatz $\mathcal{U}(\vec{\theta})$ as a product of L layers, where each layer corresponds to a rotation generated by a Pauli string G_j:

$$\mathcal{U}(\vec{\theta}) = \prod_{j=1}^{L} e^{i\theta_j G_j} = e^{i\theta_L G_L}\cdots e^{i\theta_l G_l}\cdots e^{i\theta_1 G_1} \tag{4.46}$$

To compute the gradient with respect to a specific parameter θ_l, we can decompose the unitary operator into three parts: the gates applied after the l-th layer ($U_{>l}$), the l-th gate

itself, and the gates applied before it ($U_{<l}$).

$$\mathcal{U}(\vec{\theta}) = U_{L\to l+1} \cdot e^{i\theta_l G_l} \cdot U_{l-1\to 1} \tag{4.47}$$

Using Euler's formula for the l-th gate (where $G_l^2 = \mathbb{I}$), we write:

$$e^{i\theta_l G_l} = \cos(\theta_l)\mathbb{I} + i\sin(\theta_l)G_l \tag{4.48}$$

Now, we compute the partial derivative of the unitary operator with respect to θ_l. Since the parameters in other layers are independent of θ_l, the derivative acts only on the l-th term:

$$\frac{\partial \mathcal{U}(\vec{\theta})}{\partial \theta_l} = U_{L\to l+1} \cdot \left(\frac{\partial e^{i\theta_l G_l}}{\partial \theta_l}\right) \cdot U_{l-1\to 1} \tag{4.49}$$

Differentiating the trigonometric expansion:

$$\frac{\partial e^{i\theta_l G_l}}{\partial \theta_l} = \frac{\partial}{\partial \theta_l}\left(\cos(\theta_l)\mathbb{I} + i\sin(\theta_l)G_l\right) = -\sin(\theta_l)\mathbb{I} + i\cos(\theta_l)G_l \tag{4.50}$$

Substituting this back into the expression for the derivative of the ansatz:

$$\frac{\partial \mathcal{U}}{\partial \theta_l} = -\sin(\theta_l)\left(U_{L\to l+1}U_{l-1\to 1}\right) + i\cos(\theta_l)\left(U_{L\to l+1}G_l U_{l-1\to 1}\right) \tag{4.51}$$

Recall the gradient of the cost function $C(\vec{\theta}) = |\langle\psi_k|\mathcal{U}(\vec{\theta})|\phi_0\rangle|^2$:

$$\frac{\partial C}{\partial \theta_l} = 2\,\mathrm{Re}\left[\langle\phi_0|\mathcal{U}^\dagger|\psi_k\rangle\langle\psi_k|\frac{\partial \mathcal{U}}{\partial \theta_l}|\phi_0\rangle\right] \tag{4.52}$$

Let us define $A = \langle\psi_k|\mathcal{U}(\vec{\theta})|\phi_0\rangle$. Substituting Eq. (4.51) into the inner product term:

$$\langle\psi_k|\frac{\partial \mathcal{U}}{\partial \theta_l}|\phi_0\rangle = -\sin(\theta_l)\langle\psi_k|U_{>l}U_{<l}|\phi_0\rangle + i\cos(\theta_l)\langle\psi_k|U_{>l}G_l U_{<l}|\phi_0\rangle \tag{4.53}$$

Finally, the exact gradient for the l-th parameter in a multi-layer ansatz is given by:

$$\frac{\partial C}{\partial \theta_l} = 2\,\mathrm{Re}\left[A^*\left(-\sin(\theta_l)\mathcal{T}_0^{(l)} + i\cos(\theta_l)\mathcal{T}_1^{(l)}\right)\right] \tag{4.54}$$

where $\mathcal{T}_0^{(l)} = \langle\psi_k|U_{>l}U_{<l}|\phi_0\rangle$ corresponds to the transition amplitude if the l-th gate were replaced by Identity, and $\mathcal{T}_1^{(l)} = \langle\psi_k|U_{>l}G_l U_{<l}|\phi_0\rangle$ corresponds to the amplitude if the l-th rotation were replaced by the generator G_l.

In the limit where the parameter vector approaches zero ($\vec{\theta} \to 0$), we have $\theta_l \to 0$, which implies $\sin(\theta_l) \to 0$ and $\cos(\theta_l) \to 1$. Furthermore, all other unitaries $U_{>l}$ and $U_{<l}$ approach the identity $\mathbb{I}$. Consequently:

- $A^* \to \langle\phi_0|\psi_k\rangle = c_k^*$
- The first term $(-\sin(\theta_l)\dots)$ vanishes.
- The second term simplifies to $i\langle\psi_k|\mathbb{I}\cdot G_l\cdot\mathbb{I}|\phi_0\rangle = i\langle\psi_k|G_l|\phi_0\rangle$.

Thus, Eq. (4.54) reduces to:

$$\lim_{\vec{\theta}\to 0}\frac{\partial C}{\partial \theta_l} = 2\,\mathrm{Re}\left[c_k^* \cdot i\langle\psi_k|G_l|\phi_0\rangle\right] \tag{4.55}$$

This matches perfectly with the local gradient derived in Eq. (4.16). We can highlight two things of these results. The first one is the fact of what are contributing terms in the gradient. The other thing to notice and to discuss is how this is better than the parameter shift rule that we were implementing in the numerical result section. We think that this is better because is smoother than the parameter shift rule.

El poder utilizars la estimacion de gradientes de manera eficiente, nos permite ahora, como sugieren algunas referencias [20], es posible utilizar la estimacion eficiente de gradientes via Hadamard tests en un QPU. Si realizamos estso para poder computar de manera eficiente la parte del ADAPT - VQE se ganará mucho la verdad jejej.

4.4 Q-ADAPT-VQAmp

As talked earlier, we present this:

Algorithm 1 Q-ADAPT-VQAmp

Require: Operator Pool $\mathcal{A}$, initial state $|\phi_0\rangle$, Hamiltonian H

$k \leftarrow 0$

$\mathcal{U}(\vec{\theta}) \leftarrow \mathbb{I}$ ▷ Initialize the Ansatz unitary as Identity

while Converged = **False do**

  for $A_i \in \mathcal{A}$ **do**

    $g_i \leftarrow$ Gradient Estimation estimation with the modified Hadamard Test ($\vec{\theta} = 0$) (and $|\phi_0\rangle$) (with $G_l \to A_i$)

  end for

  $i \leftarrow$ index of largest element of $\vec{g}$ ▷ Select operator with max gradient

  $k \leftarrow k + 1$

  $\mathcal{U}_k(\vec{\theta}) \leftarrow e^{i\theta_i A_i}\,\mathcal{U}_k(\vec{\theta})$ ▷ Grow the Ansatz

  $(\vec{\theta}, |\phi_0\rangle) \leftarrow \text{argmin}_{\vec{\theta}} \left\{ \text{VQAmp}\left(|\phi_0\rangle, \mathcal{U}_k(\vec{\theta}), H\right) \right\}$ ▷ Optimize parameters (Optimized with the ParamShiftRule)

  Check convergence

end while

return $\mathcal{U}(\vec{\theta}), |\phi_0\rangle$

4.5 Q-ADAPT-VQPE

Bibliography

[1] Michael A Nielsen and Isaac L Chuang. *Quantum computation and quantum information*. Cambridge university press, 2010.

[2] Aram W. Harrow, Avinatan Hassidim, and Seth Lloyd. "Quantum Algorithm for Linear Systems of Equations". In: *Physical Review Letters* 103.15 (Oct. 2009). ISSN: 1079-7114. DOI: 10.1103/physrevlett.103.150502. URL: http://dx.doi.org/10.1103/PhysRevLett.103.150502.

[3] John Preskill. "Quantum computing in the NISQ era and beyond". In: *Quantum* 2 (2018), p. 79.

[4] Marco Cerezo et al. "Variational quantum algorithms". In: *Nature Reviews Physics* 3.9 (2021), pp. 625–644.

[5] Yuxuan Du et al. *Quantum Machine Learning: A Hands-on Tutorial for Machine Learning Practitioners and Researchers*. 2025. arXiv: 2502.01146 [quant-ph]. URL: https://arxiv.org/abs/2502.01146.

[6] Alberto Peruzzo et al. "A variational eigenvalue solver on a photonic quantum processor". In: *Nature communications* 5.1 (2014), p. 4213.

[7] Natalie Klco et al. "Quantum-classical computation of Schwinger model dynamics using quantum computers". In: *Physical Review A* 98.3 (2018), p. 032331.

[8] Frank Arute et al. "Quantum supremacy using a programmable superconducting processor". In: *Nature* 574.7779 (2019), pp. 505–510.

[9] Martin Larocca et al. "Barren plateaus in variational quantum computing". In: *Nature Reviews Physics* (2025), pp. 1–16.

[10] Ali Javadi-Abhari et al. *Quantum computing with Qiskit*. 2024. DOI: 10.48550/arXiv.2405.08810. arXiv: 2405.08810 [quant-ph].

[11] Miroslav Dobšíček et al. "Arbitrary accuracy iterative quantum phase estimation algorithm using a single ancillary qubit: A two-qubit benchmark". In: *Physical Review A—Atomic, Molecular, and Optical Physics* 76.3 (2007), p. 030306.

[12] BC Travaglione, Gerard J Milburn, and TC Ralph. "Phase estimation as a quantum nondemolition measurement". In: *arXiv preprint quant-ph/0203130* (2002).

[13] David Wierichs et al. "General parameter-shift rules for quantum gradients". In: *Quantum* 6 (2022), p. 677.

[14] TM Graham et al. "Multi-qubit entanglement and algorithms on a neutral-atom quantum computer". In: *Nature* 604.7906 (2022), pp. 457–462.

[15] P. J. J. O'Malley et al. "Scalable Quantum Simulation of Molecular Energies". In: *Physical Review X* 6.3 (July 2016). ISSN: 2160-3308. DOI: 10.1103/physrevx.6.031007. URL: http://dx.doi.org/10.1103/PhysRevX.6.031007.

[16] P M Q Cruz et al. "Optimizing quantum phase estimation for the simulation of Hamiltonian eigenstates". In: *Quantum Science and Technology* 5.4 (Aug. 2020), p. 044005. ISSN: 2058-9565. DOI: 10.1088/2058-9565/abaa2c. URL: http://dx.doi.org/10.1088/2058-9565/abaa2c.

[17] Marco Cerezo et al. "Cost function dependent barren plateaus in shallow parametrized quantum circuits". In: *Nature communications* 12.1 (2021), p. 1791.

[18] Daniel S. Abrams and Seth Lloyd. "Quantum Algorithm Providing Exponential Speed Increase for Finding Eigenvalues and Eigenvectors". In: *Physical Review Letters* 83.24 (Dec. 1999), pp. 5162–5165. ISSN: 1079-7114. DOI: 10.1103/physrevlett.83.5162. URL: http://dx.doi.org/10.1103/PhysRevLett.83.5162.

[19] Sergiy Zhuk, Niall F. Robertson, and Sergey Bravyi. "Trotter error bounds and dynamic multi-product formulas for Hamiltonian simulation". In: *Phys. Rev. Res.* 6 (3 Sept. 2024), p. 033309. DOI: 10.1103/PhysRevResearch.6.033309. URL: https://link.aps.org/doi/10.1103/PhysRevResearch.6.033309.

[20] Dantong Li et al. *Efficient Quantum Gradient and Higher-order Derivative Estimation via Generalized Hadamard Test*. 2024. arXiv: 2408.05406 [quant-ph]. URL: https://arxiv.org/abs/2408.05406.

Appendix A

Detailed Derivation of the Controlled-Unitary Action and Phase Kickback

In this appendix we present a fully explicit and rigorous derivation of the transformation

$$|k\rangle \otimes |\psi\rangle \longmapsto |k\rangle \otimes U^k |\psi\rangle ,$$

which underlies the controlled-unitary stage of the Quantum Phase Estimation (QPE) algorithm. This derivation expands the discussion in the main text and makes explicit the algebra of projectors, the binary structure of the ancilla, and the mechanism known as *phase kickback*.

A.0.1 Definition of the Controlled Unitary Operators

For each ancilla qubit $j \in \{0, \ldots, n_A - 1\}$, the controlled-$U^{2^j}$ operator is defined as:

$$C_j(U^{2^j}) = |0\rangle\langle 0|_j \otimes I_B + |1\rangle\langle 1|_j \otimes U^{2^j}, \tag{A.1}$$

where I_B acts on the state register. This decomposition in terms of orthogonal projectors follows directly from the spectral decomposition of the Pauli-Z eigenbasis.

Several properties follow immediately from Eq. (A.1):

1. $C_j(U^{2^j})$ is unitary, since each block is unitary and the projectors are orthogonal and sum to the identity.

2. Controlled operators with distinct control qubits commute:

$$[C_j(U^{2^j}), C_\ell(U^{2^\ell})] = 0 \quad \text{for } j \neq \ell.$$

   This holds because the control subspaces are independent and all target actions are powers of the same unitary U.

A.0.2 Action on Computational Basis States

Let the ancilla state be the computational basis vector

$$|k\rangle = |k_{n_A-1}\rangle \otimes \cdots \otimes |k_0\rangle , \qquad k_j \in \{0, 1\},$$

with the standard binary expansion:

$$k = \sum_{j=0}^{n_A-1} k_j 2^j.$$

Applying a single controlled operator $C_j(U^{2^j})$ gives:

$$C_j(U^{2^j})(|k_j\rangle \otimes |\psi\rangle) = |k_j\rangle \otimes U^{k_j 2^j} |\psi\rangle . \tag{A.2}$$

To verify this, observe that the projectors in Eq. (A.1) select exactly one branch:

$$|0\rangle\langle 0|_j |k_j\rangle = \delta_{k_j,0} |0\rangle , \qquad |1\rangle\langle 1|_j |k_j\rangle = \delta_{k_j,1} |1\rangle .$$

Hence when $k_j = 0$ only the I_B block is activated, and when $k_j = 1$ the entire U^{2^j} block is applied.

A.0.3 Product of Controlled Unitary Operators

Because the controlled operators commute, we may write:

$$\left(\prod_{j=0}^{n_A-1} C_j(U^{2^j}) \right) (|k\rangle \otimes |\psi\rangle) = |k\rangle \otimes \left(\prod_{j=0}^{n_A-1} U^{k_j 2^j} \right) |\psi\rangle . \tag{A.3}$$

Using the additivity of exponents for powers of U,

$$U^a U^b = U^{a+b},$$

we obtain:

$$\prod_{j=0}^{n_A-1} U^{k_j 2^j} = U^{\sum_{j=0}^{n_A-1} k_j 2^j} = U^k.$$

Substituting back into Eq. (A.3) yields:

$$\left(\prod_{j=0}^{n_A-1} C_j(U^{2^j}) \right) (|k\rangle \otimes |\psi\rangle) = |k\rangle \otimes U^k |\psi\rangle . \tag{A.4}$$

This is the formal justification of Eq. (3.6) in the main text.

A.0.4 Phase Kickback Mechanism

Suppose now that $|\psi\rangle$ is an eigenstate of U:

$$U |\psi\rangle = e^{2\pi i \phi} |\psi\rangle .$$

Then:

$$U^k |\psi\rangle = (e^{2\pi i \phi})^k |\psi\rangle = e^{2\pi i \phi k} |\psi\rangle .$$

Substituting this into Eq. (A.4) gives the global transformation:

$$|k\rangle \otimes |\psi\rangle \longmapsto e^{2\pi i \phi k} |k\rangle \otimes |\psi\rangle .$$

The phase $e^{2\pi i\phi k}$ is thus transferred—"kicked back"—to the amplitude of the ancilla computational basis state $|k\rangle$. This phenomenon is fundamental to QPE and also appears in other foundational algorithms (Deutsch–Jozsa, Bernstein–Vazirani, etc.). Its origin is strictly algebraic: a unitary eigenphase in the target register is converted into a relative phase in the control register via the structure of Eq. (A.1). This is what ultimately enables the Quantum Fourier Transform to extract an n_A-bit approximation to the phase ϕ.

Appendix B

Local Hamiltonian Analysis

1. The Hamiltonian

The n-qubit Hamiltonian H is defined as:

$$H = \mathbb{I}^{\otimes n} - \frac{1}{n}\sum_{j=0}^{n-1} |0\rangle\langle 0|_j$$

where $\mathbb{I}^{\otimes n}$ is the identity operator on the n-qubit Hilbert space $\mathcal{H} = (\mathbb{C}^2)^{\otimes n}$, and $|0\rangle\langle 0|_j$ is the projector onto the $|0\rangle$ state of the j-th qubit.

2. Hamiltonian Simplification

We can define two operators based on the computational basis:

- $K_0 = \sum_{j=0}^{n-1} |0\rangle\langle 0|_j$, which counts the number of qubits in the $|0\rangle$ state.
- $K_1 = \sum_{j=0}^{n-1} |1\rangle\langle 1|_j$, which counts the number of qubits in the $|1\rangle$ state. This is the **Hamming weight operator**.

For any single qubit, the projectors form a complete set: $|0\rangle\langle 0|_j + |1\rangle\langle 1|_j = \mathbb{I}_j$. Summing over all n qubits, we find the operator identity:

$$K_0 + K_1 = \sum_{j=0}^{n-1}\Big(|0\rangle\langle 0|_j + |1\rangle\langle 1|_j\Big) = \sum_{j=0}^{n-1}\mathbb{I}_j$$

When applied to any computational basis state $|x\rangle$, $(K_0 + K_1)|x\rangle = (k+j)|x\rangle = n|x\rangle$, where k is the count of zeros and j is the count of ones. Therefore, the operator identity is $K_0 + K_1 = n\mathbb{I}^{\otimes n}$.

We can substitute $K_0 = n\mathbb{I} - K_1$ into the original Hamiltonian H:

$$\begin{aligned} H &= \mathbb{I} - \frac{1}{n}K_0 \\ &= \mathbb{I} - \frac{1}{n}(n\mathbb{I} - K_1) \\ &= \mathbb{I} - \mathbb{I} + \frac{1}{n}K_1 \\ &= \frac{1}{n}K_1 \end{aligned}$$

Thus, the Hamiltonian is equivalent to the normalized Hamming weight operator:

$$H = \frac{1}{n} \sum_{j=0}^{n-1} |1\rangle \langle 1|_j$$

3. Eigenstates and Eigenvalues

The 2^n computational basis states $|x\rangle = |x_0 x_1 \dots x_{n-1}\rangle$ (where $x_i \in \{0, 1\}$) are the eigenstates of H.

Let $j = \mathrm{wt}(|x\rangle)$ be the Hamming weight of the state $|x\rangle$ (i.e., the total number of 1s). When the operator K_1 acts on $|x\rangle$, it counts the number of 1s:

$$K_1 |x\rangle = \left(\sum_{i=0}^{n-1} |1\rangle \langle 1|_i \right) |x\rangle = j |x\rangle$$

The eigenvalue equation for H is therefore:

$$H |x\rangle = \left(\frac{1}{n} K_1 \right) |x\rangle = \frac{1}{n} (j |x\rangle) = \left(\frac{j}{n} \right) |x\rangle$$

4. Spectrum and Degeneracy

Spectrum (Eigenvalues)

The eigenvalues λ_j of H are determined by the Hamming weight j. The set of distinct eigenvalues is:

$$\lambda_j = \frac{j}{n}, \quad \text{for } j \in \{0, 1, 2, \dots, n\}$$

Degeneracy (Multiplicity)

The degeneracy d_j of each eigenvalue λ_j is equal to the number of n-qubit basis states $|x\rangle$ that have a Hamming weight of j. This is given by the binomial coefficient:

$$d_j = \binom{n}{j} = \frac{n!}{j!(n-j)!}$$

The sum of all degeneracies correctly gives the total dimension of the space: $\sum_{j=0}^{n} d_j = \sum_{j=0}^{n} \binom{n}{j} = 2^n$. Given this, the only non-degenerated eigenvectors correspons to $|0\rangle^{\otimes n}$ and $|1\rangle^{\otimes n}$

Appendix C

Gradient Variance Calculations

To derive the expectation $\mathbb{E}[\cos^2(\theta/2)]$, we first use the trigonometric identity $\cos^2(x) = \frac{1+\cos(2x)}{2}$. Letting $x = \theta/2$, we have:

$$\cos^2(\theta/2) = \frac{1+\cos(\theta)}{2}.$$

Taking the expectation over $\theta \sim \mathcal{N}(0, \sigma^2)$ and using the linearity of the expectation operator:

$$\mathbb{E}[\cos^2(\theta/2)] = \frac{1}{2}\left(1 + \mathbb{E}[\cos(\theta)]\right).$$

Recall that for a Gaussian variable with zero mean, the characteristic function is given by $\mathbb{E}[e^{it\theta}] = e^{-\sigma^2 t^2/2}$. Using Euler's formula, $\mathbb{E}[\cos(\theta)]$ corresponds to the real part of the characteristic function evaluated at $t = 1$:

$$\mathbb{E}[\cos(\theta)] = e^{-\sigma^2(1)^2/2} = e^{-\sigma^2/2}.$$

Substituting this back yields the result:

$$\mathbb{E}[\cos^2(\theta/2)] = \frac{1+e^{-\sigma^2/2}}{2}.$$

Here we provide details of the derivations. For a single parameter θ distributed as $\mathcal{N}(0, \sigma^2)$, the relevant expectations are

$$\mathbb{E}[\cos^2(\theta/2)] = \frac{1+e^{-\sigma^2/2}}{2}, \qquad \mathbb{E}[\cos^4(\theta/2)] = \frac{3+4e^{-\sigma^2/2}+e^{-2\sigma^2}}{8}. \tag{C.1}$$

Similarly,

$$\mathbb{E}[\cos^2(\theta/2)\sin^2(\theta/2)] = \mathbb{E}[\cos^2(\theta/2)] - \mathbb{E}[\cos^4(\theta/2)] = \frac{1-e^{-2\sigma^2}}{8}. \tag{C.2}$$

Since parameters are independent, products factorize. This yields

$$\mathbb{E}[g_p^2] = F^2 m_1^{P-1} m_2, \tag{C.3}$$

and $\mathbb{E}[g_p] = 0$ due to the odd integrand. For small σ, expansions give $m_1 \approx 1 - \sigma^2/2$ and $m_2 \approx \sigma^2/4$, so $\mathrm{Var}(g_p) \approx F^2(\sigma^2/4)\exp(-(P-1)\sigma^2/2)$. Optimizing with respect to σ gives $\sigma^2 \approx 2/P$ and a maximal variance scaling as $F^2/(2eP)$.

Appendix D

Hadamard Test

This section describes the standard Hadamard test used to find the real part of an expectation value. The Hadamard test is a subroutine that allows to estimate the quantity $\Re\{\langle\psi|U|\psi\rangle\}$. For our case, we will utilize a quantum gate U such that $|\phi\rangle = U|\psi\rangle$. The circuit for this is:

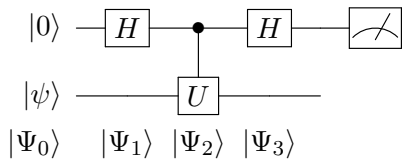

D.0.1 Derivation

We trace the state of the system through the circuit:

$$
\begin{aligned}
|\Psi_0\rangle &= |0\rangle \otimes |\psi\rangle \\
|\Psi_1\rangle &= (H \otimes \mathbb{I})\,|\Psi_0\rangle = \frac{1}{\sqrt{2}}(|0\rangle + |1\rangle) \otimes |\psi\rangle \\
&= \frac{1}{\sqrt{2}}\left(|0\rangle\,|\psi\rangle + |1\rangle\,|\psi\rangle\right) \\
|\Psi_2\rangle &= \text{C-U}\,|\Psi_1\rangle = \frac{1}{\sqrt{2}}\left(|0\rangle\,|\psi\rangle + |1\rangle\,U\,|\psi\rangle\right) \\
|\Psi_3\rangle &= (H \otimes \mathbb{I})\,|\Psi_2\rangle \\
&= \frac{1}{\sqrt{2}}\left(\left(\frac{|0\rangle + |1\rangle}{\sqrt{2}}\right) \otimes |\psi\rangle + \left(\frac{|0\rangle - |1\rangle}{\sqrt{2}}\right) \otimes U\,|\psi\rangle\right) \\
&= \frac{1}{2}\left(|0\rangle \otimes (|\psi\rangle + U\,|\psi\rangle) + |1\rangle \otimes (|\psi\rangle - U\,|\psi\rangle)\right) \\
&= \frac{1}{2}\,|0\rangle \otimes (\mathbb{I} + U)\,|\psi\rangle + \frac{1}{2}\,|1\rangle \otimes (\mathbb{I} - U)\,|\psi\rangle
\end{aligned}
$$

D.0.2 Probabilities and Expectation Value

The probability of measuring the ancilla in state $|0\rangle$ is:

$$
P(0) = \left\| \frac{1}{2}(\mathbb{I} + U)\,|\psi\rangle \right\|^2 = \frac{1}{4}\,\langle\psi|(\mathbb{I} + U^\dagger)(\mathbb{I} + U)|\psi\rangle
$$

The probability of measuring the ancilla in state $|1\rangle$ is:

$$P(1) = \left\| \frac{1}{2}(\mathbb{I} - U)\,|\psi\rangle \right\|^2 = \frac{1}{4}\,\langle\psi|(\mathbb{I} - U^\dagger)(\mathbb{I} - U)|\psi\rangle$$

The expectation value of the measurement $\langle\sigma_z\rangle$ is $P(0) - P(1)$:

$$\begin{aligned}
\langle\sigma_z\rangle &= P(0) - P(1) \\
&= \frac{1}{4}\,\langle\psi|((\mathbb{I} + U^\dagger + U + U^\dagger U) - (\mathbb{I} - U^\dagger - U + U^\dagger U))|\psi\rangle \\
&= \frac{1}{4}\,\langle\psi|(2U^\dagger + 2U)|\psi\rangle \\
&= \frac{1}{2}\,\langle\psi|U^\dagger + U|\psi\rangle \\
&= \mathrm{Re}\{\langle\psi|U|\psi\rangle\}
\end{aligned}$$

(Since $2\mathrm{Re}\{z\} = z + z^*$, and $\langle\psi|U^\dagger|\psi\rangle = \langle U\psi|\psi\rangle = \langle\psi|U|\psi\rangle^*$)

D.0.3 Note on Imaginary Part

To find the imaginary part, $\mathrm{Im}\{\langle\psi|U|\psi\rangle\}$, one can use the same circuit but prepare the ancilla in the state $\frac{1}{\sqrt{2}}(|0\rangle - i\,|1\rangle)$ (i.e., $|-i\rangle$) instead of $|0\rangle$ before the first H gate, or equivalently, apply an $S^\dagger$ (or $R_y(-\pi/2)$) gate to the ancilla before the H gate. The expectation value $\langle\sigma_z\rangle$ will then be equal to the imaginary part. The circuit becomes:

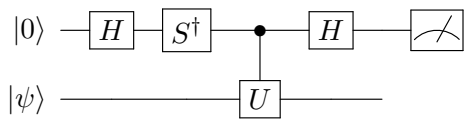

Bibliography

[1] Michael A Nielsen and Isaac L Chuang. *Quantum computation and quantum information*. Cambridge university press, 2010.

[2] Aram W. Harrow, Avinatan Hassidim, and Seth Lloyd. "Quantum Algorithm for Linear Systems of Equations". In: *Physical Review Letters* 103.15 (Oct. 2009). ISSN: 1079-7114. DOI: 10.1103/physrevlett.103.150502. URL: http://dx.doi.org/10.1103/PhysRevLett.103.150502.

[3] John Preskill. "Quantum computing in the NISQ era and beyond". In: *Quantum* 2 (2018), p. 79.

[4] Marco Cerezo et al. "Variational quantum algorithms". In: *Nature Reviews Physics* 3.9 (2021), pp. 625–644.

[5] Yuxuan Du et al. *Quantum Machine Learning: A Hands-on Tutorial for Machine Learning Practitioners and Researchers*. 2025. arXiv: 2502.01146 [quant-ph]. URL: https://arxiv.org/abs/2502.01146.

[6] Alberto Peruzzo et al. "A variational eigenvalue solver on a photonic quantum processor". In: *Nature communications* 5.1 (2014), p. 4213.

[7] Natalie Klco et al. "Quantum-classical computation of Schwinger model dynamics using quantum computers". In: *Physical Review A* 98.3 (2018), p. 032331.

[8] Frank Arute et al. "Quantum supremacy using a programmable superconducting processor". In: *Nature* 574.7779 (2019), pp. 505–510.

[9] Martin Larocca et al. "Barren plateaus in variational quantum computing". In: *Nature Reviews Physics* (2025), pp. 1–16.

[10] Ali Javadi-Abhari et al. *Quantum computing with Qiskit*. 2024. DOI: 10.48550/arXiv.2405.08810. arXiv: 2405.08810 [quant-ph].

[11] Miroslav Dobšíček et al. "Arbitrary accuracy iterative quantum phase estimation algorithm using a single ancillary qubit: A two-qubit benchmark". In: *Physical Review A—Atomic, Molecular, and Optical Physics* 76.3 (2007), p. 030306.

[12] BC Travaglione, Gerard J Milburn, and TC Ralph. "Phase estimation as a quantum nondemolition measurement". In: *arXiv preprint quant-ph/0203130* (2002).

[13] David Wierichs et al. "General parameter-shift rules for quantum gradients". In: *Quantum* 6 (2022), p. 677.

[14] TM Graham et al. "Multi-qubit entanglement and algorithms on a neutral-atom quantum computer". In: *Nature* 604.7906 (2022), pp. 457–462.

[15] P. J. J. O'Malley et al. "Scalable Quantum Simulation of Molecular Energies". In: *Physical Review X* 6.3 (July 2016). ISSN: 2160-3308. DOI: 10.1103/physrevx.6.031007. URL: http://dx.doi.org/10.1103/PhysRevX.6.031007.

[16] P M Q Cruz et al. "Optimizing quantum phase estimation for the simulation of Hamiltonian eigenstates". In: *Quantum Science and Technology* 5.4 (Aug. 2020), p. 044005. ISSN: 2058-9565. DOI: 10.1088/2058-9565/abaa2c. URL: http://dx.doi.org/10.1088/2058-9565/abaa2c.

[17] Marco Cerezo et al. "Cost function dependent barren plateaus in shallow parametrized quantum circuits". In: *Nature communications* 12.1 (2021), p. 1791.

[18] Daniel S. Abrams and Seth Lloyd. "Quantum Algorithm Providing Exponential Speed Increase for Finding Eigenvalues and Eigenvectors". In: *Physical Review Letters* 83.24 (Dec. 1999), pp. 5162–5165. ISSN: 1079-7114. DOI: 10.1103/physrevlett.83.5162. URL: http://dx.doi.org/10.1103/PhysRevLett.83.5162.

[19] Sergiy Zhuk, Niall F. Robertson, and Sergey Bravyi. "Trotter error bounds and dynamic multi-product formulas for Hamiltonian simulation". In: *Phys. Rev. Res.* 6 (3 Sept. 2024), p. 033309. DOI: 10.1103/PhysRevResearch.6.033309. URL: https://link.aps.org/doi/10.1103/PhysRevResearch.6.033309.

[20] Dantong Li et al. *Efficient Quantum Gradient and Higher-order Derivative Estimation via Generalized Hadamard Test*. 2024. arXiv: 2408.05406 [quant-ph]. URL: https://arxiv.org/abs/2408.05406.