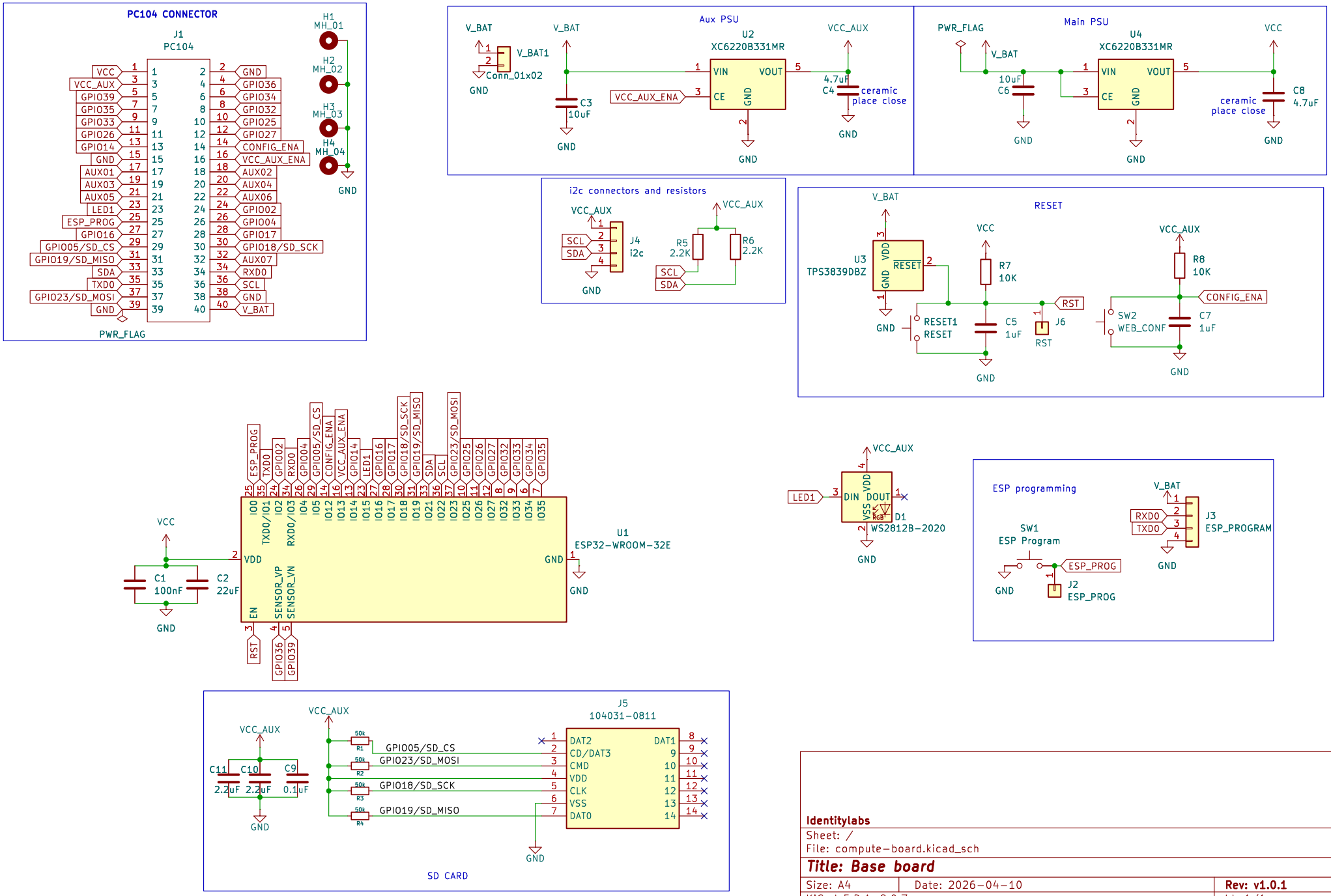

Identitylabs

Sheet: /

File: compute-board.kicad_sch

Title: Base board

Size: A4	Date: 2026-04-10	Rev: v1.0.1
KiCad E.D.A. 9.0.7		Id: 1/1