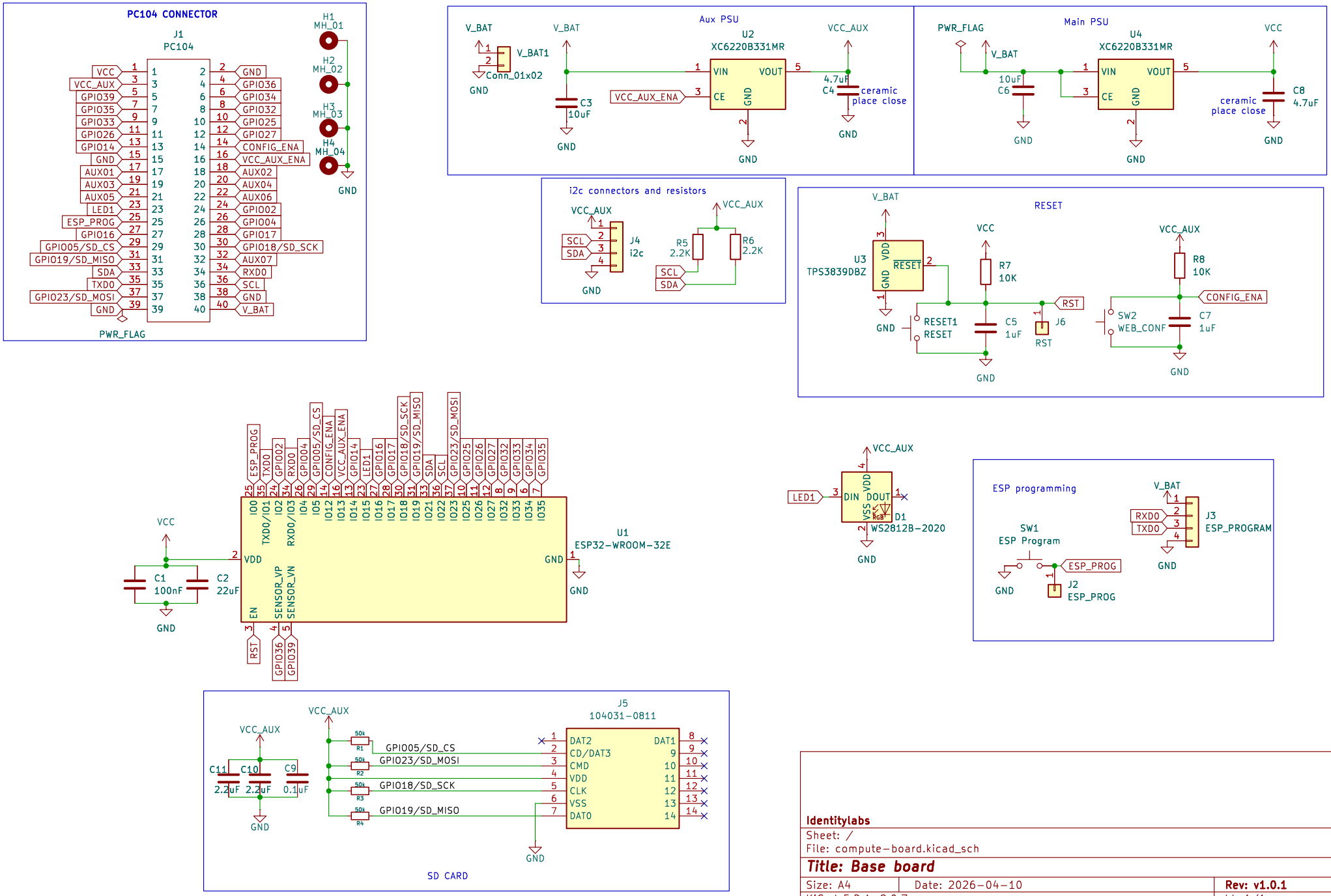


**Identitylabs**

Sheet: /

File: compute-board.kicad_sch

**Title: Base board**

| | | |
|---|---|---|
| Size: A4 | Date: 2026-04-10 | Rev: v1.0.1 |
| KiCad E.D.A. 9.0.7 | | Id: 1/1 |