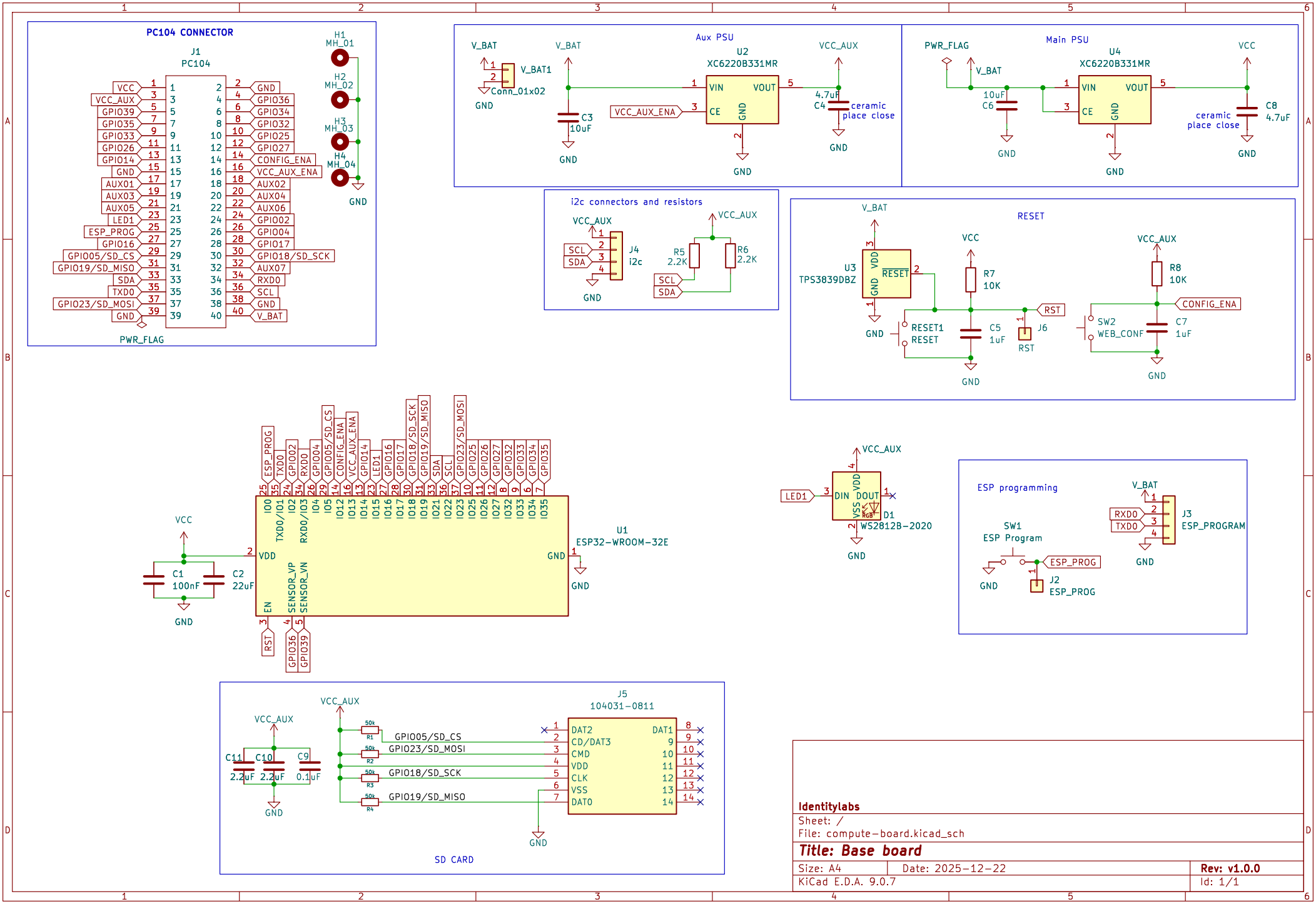

Identitylabs

Sheet: /

File: compute-board.kicad_sch

Title: Base board

Size: A4	Date: 2025-12-22	Rev: v1.0.0
KiCad E.D.A. 9.0.7		Id: 1/1