Analytical and Finite-Element Discrepancy Assessment of a Tendon-Driven Compliant Finger

Jessica Sillus
ME 7751 Project 2
The Ohio State University
Email: sillus.1@osu.edu

***Abstract*—This project studies a four-joint tendon-driven compliant finger and compares a closed-form pseudo-rigid-body analytical model against a nonlinear finite-element model created in FreeCAD/CalculiX. The mechanism is composed of rigid links separated by TPU flexure joints with nonuniform thickness, so the problem is both geometrically simple enough for hand derivation and rich enough to expose important analytical–numerical discrepancy. The analytical model predicts joint rotation from tendon moment and torsional stiffness scaling, while the finite-element model resolves the full three-dimensional bending of the compliant joints under matched boundary conditions and loading. The final submission also includes an interactive browser GUI that visualizes the one-spring PRBM, a twenty-spring distributed PRBM, and the staged FEA response on a common force axis. The resulting comparison shows that the closed-form model captures the expected stiffness trend but overpredicts curl relative to the FEA data, especially as cable force increases. The discrepancy is traced to changing effective moment arm, distributed curvature, large-rotation effects, material idealization, and the limitations of representing each flexure as a linear torsional spring. Engineering recommendations are therefore focused on improving the reduced-order force-transmission model and using the GUI to calibrate that model over the validated low-load operating range.**

***Index Terms*—compliant mechanisms, finite element analysis, pseudo-rigid-body model, tendon-driven finger, discrepancy analysis**

I. Introduction and Motivation

Compliant fingers are attractive for robotic grasping because they replace conventional pin joints with elastic deformation, reducing part count while improving passive adaptability. For preliminary design, pseudo-rigid-body models (PRBMs) are useful because they convert a continuous compliant structure into a tractable set of rigid links and rotational springs. That simplification is valuable only if its prediction error is understood.

The motivation for this project is therefore not just to build a PRBM, but to quantify how and why it deviates from a higher-fidelity model. A tendon-driven finger is a relevant validation problem because the same actuation input can be applied to a closed-form analytical model, a finite-element model, and an interactive comparison tool. This makes it possible to examine the discrepancy between analytical and FEA predictions in a way that is directly useful for mechanism design.

The compliant finger studied here is part of a larger tendon-driven gripper concept intended for lightweight robotic grasping. The design context is important because the finger is not an isolated beam specimen; it is a subsystem whose bending response directly affects overall gripper closing behavior, tendon routing, and practical packaging around the actuation hardware. Figure 1 shows the gripper concept with the compliant fingers attached to the central actuation assembly.

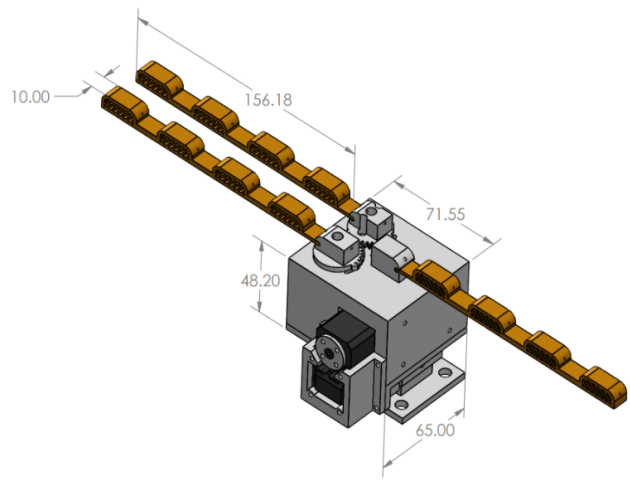

Fig. 1. Overall tendon-driven gripper concept showing the compliant finger geometry in its system-level context.

II. Mechanism Description and Problem Definition

The mechanism consists of a fixed base followed by four rigid phalange-like links connected by compliant TPU joints. Each compliant section has the same width and span, but the thickness varies along the finger:

$$t = (3.00,\ 3.25,\ 3.25,\ 3.50)\ \mathrm{mm}. \tag{1}$$

The thinner proximal joints are intentionally more compliant, so larger rotation is expected near the base.

A tendon load is applied to create a closing moment at each joint. In the analytical model this is represented using a constant tendon moment arm. In the FEA model the same nominal cable force is converted to equivalent joint moments applied about the local joint axes. The central problem is to determine how closely the analytical prediction of joint rotations and total finger curl matches the FEA response for the same loading schedule.

TABLE I
FINGER GEOMETRY AND MODEL PARAMETERS.

Parameter	Value
Base block length	20.0 mm
Rigid segment length	25.0 mm
Compliant segment length	15.0 mm
Segment height	10.0 mm
Segment width	12.0 mm
Joint thicknesses	3.00, 3.25, 3.25, 3.50 mm
Nominal analytical moment arm	8.0 mm
Nominal joint stiffness	50.0 N-mm/rad at $t = 3.25$ mm

The intended function of the mechanism is to curl compliantly around a grasped object while remaining lightweight and easy to actuate with a single tendon. For the reduced-order model, the finger is assumed to deform primarily in a plane, the thick link segments are treated as rigid relative to the flexures, the tendon moment arm is taken as constant, and the loading is quasi-static. For the FEA model, the same nominal geometry is retained, the base face is fully fixed, no object contact is included, and the compliant joints are assigned TPU properties while the larger link regions are treated as much stiffer structural members. These assumptions isolate the discrepancy associated with compliance modeling rather than with contact, friction, or dynamic effects.

The principal geometric and modeling parameters are summarized in Table I.

III. ANALYTICAL MODELING METHODOLOGY

A. Pseudo-Rigid-Body Approximation

Each compliant joint is replaced by a rotational spring. The baseline torsional stiffness is scaled with the cube of the joint thickness, consistent with rectangular beam bending:

$$I_i = \frac{bt_i^3}{12}, \tag{2}$$

$$k_i = \frac{EI_i}{l}, \tag{3}$$

$$k_i = k_{\text{nom}} \left(\frac{t_i}{t_{\text{nom}}} \right)^3. \tag{4}$$

In the implementation, the nominal torsional stiffness is

$$k_{\text{nom}} = 50.0 \text{ N}-\text{mm/rad} \tag{5}$$

at

$$t_{\text{nom}} = 3.25 \text{ mm}. \tag{6}$$

B. Cable-Force-to-Joint-Moment Relation

For a cable force F_c and constant moment arm h, the analytical model applies the same bending moment at each joint:

$$M_i = F_c h. \tag{7}$$

Each joint rotation is then

$$\theta_i = \frac{M_i}{k_i} = \frac{F_c h}{k_i}. \tag{8}$$

The predicted total curl angle is the sum of the joint rotations:

$$\theta_{\text{tip}} = \sum_{i=1}^{4} \theta_i. \tag{9}$$

This formulation is implemented in `Finger_PRBM.py` and evaluated directly as a function of cable force. The one-spring PRBM is therefore a linear torsional-stiffness model with a constant force-to-moment mapping, negligible axial and shear deformation, and no out-of-plane kinematic coupling. Those assumptions make the derivation transparent and fast to evaluate, but they also define the main analytical limitations explored later in the paper.

C. Kinematic and Cable-Length Closure Relations

The analytical model was also developed from a joint-by-joint moment balance using a PRBM description of the finger. The general balance used for joint j is

$$\sum_{i=j}^{N-1} F_i \left[\frac{l}{2} + l \sum_{m=j}^{i-1} \cos(\theta_i - \theta_m) \right] - (N-j) F_c h = -\sum_{i=j}^{N-1} k_i \theta_i, \tag{10}$$

where F_i represents the segment load contribution, l is the rigid segment length, F_c is the cable tension, h is the tendon moment arm, and k_i is the torsional stiffness of joint i. For the simplified static model used in the current implementation, this reduces to the constant-moment relation in the previous subsection, but Eq. (10) is the more general derivation basis developed for the project.

To relate finger deflection to the motor input, the reeled cable length is equated to the cable-length change induced by joint rotation:

$$h \sum_{i=0}^{N-1} \theta_i = r_p \Delta\phi, \tag{11}$$

where r_p is the pulley radius and $\Delta\phi$ is the motor rotation. Equation (11) is used in the discrepancy app to connect motor-angle and cable-length data to analytical and experimental joint deflection trends.

D. Distributed-Spring Comparison Model

To test whether a more distributed compliance representation changes the prediction materially, a second analytical model divides each compliant gap into twenty sub-springs while preserving the aggregate stiffness of the joint. This twenty-spring model is not the validation reference; instead, it is used as an intermediate analytical model to determine whether lumping all compliance at a single hinge is itself a major source of discrepancy. Importantly, the twenty-spring version still uses the same stiffness scaling law and the same nominal tendon moment arm, so any remaining error relative to FEA cannot be attributed only to hinge discretization.

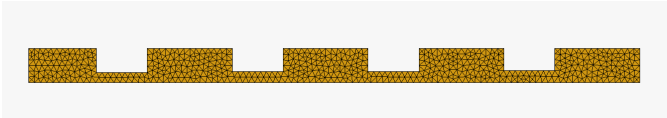

Fig. 2. Undeformed finite-element mesh of the compliant finger used for the FreeCAD/CalculiX simulations.

IV. FEA Methodology

The finite-element model is generated in `Finger_Sim_FreeCAD.py`. The geometry is constructed directly from the same segment lengths and joint thicknesses used in the analytical model, so the comparison is performed on matched nominal geometry rather than on two unrelated finger definitions.

The FEA workflow is summarized as follows:

1) Build a three-dimensional solid finger in FreeCAD from rigid blocks and compliant joint sections.
2) Assign rigid-link material properties to the thick segments and a TPU hyperelastic material model to the compliant joints.
3) Generate a tetrahedral Gmsh mesh with local refinement maintained around the joints.
4) Apply a fixed constraint at the base face and closing moments at the four joints corresponding to the prescribed cable force and moment arm.
5) Solve the nonlinear static response in CalculiX over a staged loading ramp and export joint-bending results to `Finger_Sim_VM2_FEA_stages.csv`.

The staged force schedule used in the current dataset is

$$F_c = 0,\ 1.25,\ 2.50,\ 3.75,\ 5.00,\ 10.00,\ 20.00\ \text{N}, \tag{12}$$

which corresponds to multipliers of a 1 N base load. The model uses a three-dimensional tetrahedral solid mesh because the purpose of the FEA is to allow strain to distribute through the joint volume instead of forcing all compliance into an ideal hinge. The exported FEA results include joint moments, joint rotations, inferred joint bend angles, and segment-center locations for each stage. Those quantities are then re-used by the comparison app as a surrogate response curve. The FEA assumptions are therefore explicit: matched nominal geometry, fixed-base boundary condition, quasi-static staged loading, no contact with external objects, and numerical approximation through mesh discretization and nonlinear solver tolerances.

V. Results and Comparison

The paper compares three model levels on the same input axis: a single-spring PRBM, a twenty-spring distributed PRBM, and the finite-element model. For consistency, all angles in this section are reported as positive bend magnitudes. Table II summarizes representative tip-angle predictions from all three at common cable-force values, and Table III converts those same points into absolute error. The FEA values are taken from the staged response exported to `Finger_Sim_VM2_FEA_stages.csv`, while the two PRBM values are computed analytically for the same nominal cable-force levels.

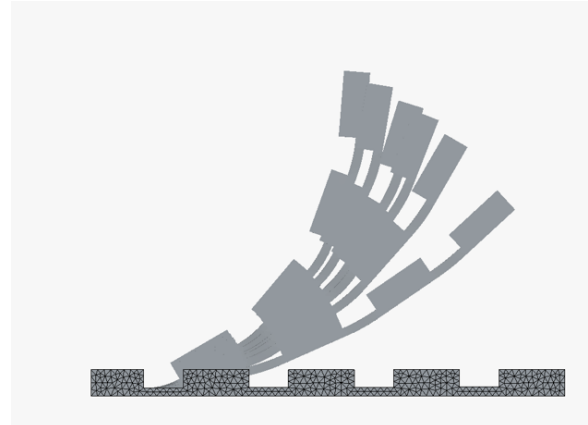

Fig. 3. FEA stage visualization showing the undeformed finger together with multiple bending states from the staged loading analysis.

TABLE II
Representative 1-spring, 20-spring, and FEA tip-angle comparison.

Cable force	1-spring PRBM	20-spring PRBM	FEA
1.25 N	46.66°	25.60°	20.44°
3.75 N	139.99°	76.81°	39.60°
5.00 N	186.65°	102.41°	79.59°

Table III makes the error between methods explicit. At the lowest nonzero load in the FEA dataset, the twenty-spring model is already closer to the finite-element response than the one-spring model: at 1.25 N, the 1-spring PRBM differs from FEA by about 26.2°, whereas the 20-spring model differs by about 5.2°. This supports the intuition that distributing compliance improves the geometric representation. However, the error table also shows that neither PRBM fully tracks the nonlinear FEA response as load increases. The 20-spring model remains closer than the 1-spring model in the current staged dataset, but both analytical models diverge from FEA at moderate and high load, which means segmentation alone does not remove the need for better force-transmission and material modeling.

Two systematic trends are clear across the comparison. First, increasing the number of analytical springs improves local curvature representation and lowers error at every force level reported in the table. Second, error still grows strongly with cable force, so the dominant discrepancy is not just the number of hinges. The more likely cause is model form: the analytical models assume a constant tendon lever arm and linear rotational stiffness, whereas the FEA response evolves with configuration, distributed strain, and nonlinear deformation.

The FEA data also show an important limitation of the current validation range. Beyond approximately 5 N, the raw stage export becomes non-monotonic in sign for the reported tip angle, even though the joint bend magnitudes

TABLE III
ABSOLUTE TIP-ANGLE ERROR BETWEEN METHODS.

Cable force	|1-spring−FEA|	|20-spring−FEA|	|1-spring−20-spring|
1.25 N	26.22°	5.16°	21.06°
3.75 N	100.39°	37.21°	63.18°
5.00 N	107.06°	22.82°	84.24°

Fig. 4. One-spring PRBM configuration at peak actuation. Rotation is concentrated at four lumped hinges.

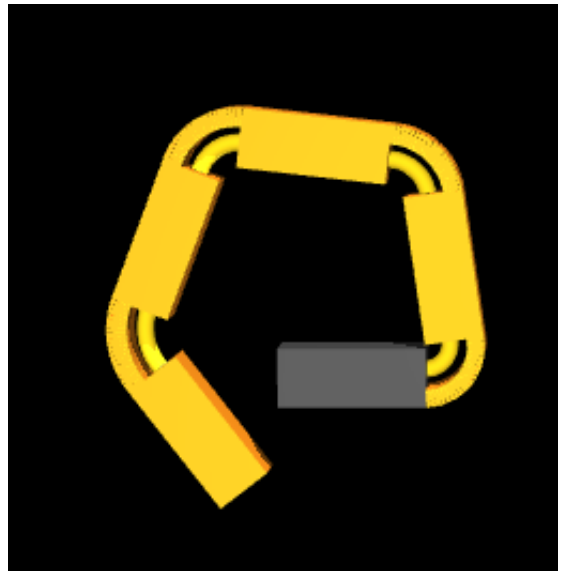

Fig. 5. Twenty-spring PRBM configuration at peak actuation. Curvature is smoother, but the model is still analytical rather than finite-element based.

TABLE IV
PREVIOUSLY OBTAINED ONE-SPRING PRBM VERSUS EXPERIMENT ERROR METRICS.

Joint	RMSE (deg)	Max |Error| (deg)	Mean error 0–11.8 mm	Mean error 23.6–31.4 mm
1	4.93	9.49	5.60	4.72
2	3.42	7.56	2.62	3.81
3	5.48	11.82	1.65	6.79
4	4.51	10.92	1.17	5.50

remain informative. For that reason, the final browser GUI and the main comparison in this paper emphasize the 0–5 N range, use the per-joint bend magnitudes from the staged FEA output, and interpolate a monotonic surrogate response for comparison plots. This keeps the discrepancy analysis focused on physically meaningful joint bending rather than on a single signed angle that is sensitive to post-processing convention and nonlinear solver path.

Joint-level error gives a more stable comparison basis than the signed tip angle alone. At 1.25 N the joint-angle RMSE relative to FEA is 6.63° for the 1-spring PRBM and only 1.60° for the 20-spring PRBM. At 5.00 N the same ranking remains, with RMSE values of 27.25° and 6.15°, respectively. This confirms that the distributed PRBM better matches the FEA joint-bending pattern, even though both analytical models eventually depart from the finite-element response.

Figures 4 and 5 illustrate the geometric difference between the lumped and distributed analytical models. The one-spring PRBM produces sharp kinks at each flexure, while the twenty-spring version spreads curvature over the joint length. Even so, the comparison app shows that simply distributing compliance does not eliminate the analytical–FEA gap; the dominant discrepancy remains between analytical assumptions and the nonlinear structural response resolved by FEA.

A. Comparison to Previous Experiment-vs-PRBM Results

In addition to the new FEA comparison, previous work compared the one-spring PRBM directly against measured joint angles from the physical finger. Those results provide an experimental benchmark for how well the simplest PRBM reproduces actual joint-by-joint motion. Table IV summarizes the previously reported error metrics for the four joints.

These experimental results are important because they show that the one-spring PRBM can still provide useful joint-angle predictions in a practical operating range, with joint-wise RMSE values of roughly 3.4° to 5.5°. In other words, the simplest PRBM is not useless; it is a compact engineering approximation that captures trends reasonably well when judged against previous experiment. The FEA comparison in this paper adds a different type of validation by showing where the analytical assumptions begin to break down when a three-dimensional nonlinear structural model is used as the reference.

VI. INTERACTIVE APP DESCRIPTION

The final interactive deliverable is a browser-based GUI that presents the same discrepancy study directly from the repository through GitHub Pages. It is derived from the same analytical and staged FEA datasets used in this paper, so the

report figures, tables, and interactive plots are all tied to one consistent model set. The browser app compares three sources on a common cable-force axis:

1) the one-spring analytical PRBM,
2) the twenty-spring analytical PRBM, and
3) the staged FEA surrogate reconstructed from `Finger_Sim_VM2_FEA_stages.csv`.

The app design is intentionally organized around the questions a reviewer would ask when comparing a reduced-order model to FEA. The control area provides a force slider, manual numeric entry, and discrete FEA-stage buttons so the user can either sweep continuously through the loading range or jump directly to solved FEA points. The left plot overlays the predicted finger geometry from the one-spring PRBM, the twenty-spring PRBM, and the FEA surrogate, which makes the difference between lumped and distributed curvature immediately visible. The right plot reports tip bend versus cable force, while the lower discrepancy plot and summary table show where the analytical models depart from the FEA reference at the level of individual joints and aggregate bend metrics.

Two implementation choices are especially important for interpretation. First, the browser GUI is capped at 5 N because that is the force range in which the staged FEA comparison remains most reliable and easiest to interpret. Second, all displayed bends are reported as positive magnitudes, which avoids confusion from sign changes in the raw high-load FEA export. These choices align the app with the force levels and conventions used in Tables II and III.

The original desktop script, `Finger_Discrepancy_App.py`, remains useful for local analysis and for regenerating the FEA-backed comparison dataset. However, the browser presentation is the stronger final communication tool because it allows the mechanism design, the PRBM assumptions, the FEA reference, and the resulting discrepancy trends to be inspected immediately without a local software setup.

VII. Discussion

Taken together, the results establish a clear hierarchy among the models. The one-spring PRBM is the simplest and fastest representation. The twenty-spring PRBM improves the shape description and, in the low-load FEA comparison, reduces the discrepancy relative to the single-spring model. The FEA model is the highest-fidelity computational reference because it resolves distributed deformation, material assignment, three-dimensional geometry, and nonlinear structural response directly in the compliant finger.

Several effects explain the gap between the PRBM predictions and the FEA response. First, the analytical models assume a constant tendon moment arm, while the actual effective moment arm changes as the geometry deforms. Second, the FEA model distributes strain through a finite compliant volume, whereas the PRBMs concentrate it into ideal rotational springs. Third, geometric nonlinearity and large-deformation effects become important as the finger rotates, especially for larger imposed moments. Fourth, the stiffness law used in the PRBM is a reduced-order material idealization, while the FEA uses a richer constitutive description for the TPU joints. Finally, the FEA itself still carries numerical approximation through mesh resolution, staged loading, and nonlinear solver tolerances, so the comparison is not a comparison to mathematical truth; it is a comparison to a higher-fidelity numerical reference.

The browser GUI helps interpret these discrepancy sources because it separates global and local behavior. The shape overlay reveals that the main error is not only total curl but also how curvature is distributed along the finger. The tip-response plot shows the global overprediction trend of the analytical models. The per-joint discrepancy plot and comparison table then identify which joints dominate the error at a given force level. This makes the app more than a visualization aid: it is part of the engineering argument for where the reduced-order model should be improved next.

The previous experiment-vs-PRBM comparison provides a useful counterpoint. It shows that the one-spring model can match measured joint trends with only a few degrees of error per joint in a physically tested configuration. That means the PRBM remains valuable as a low-order design tool. The new FEA comparison does not invalidate the earlier experimental usefulness; instead, it shows more specifically where the model assumptions become limiting. The current evidence suggests that the 20-spring formulation is the better analytical approximation to the FEA reference, while the 1-spring model is the only one that has been directly checked against experiment so far.

From an engineering standpoint, the most important recommendation is to improve the reduced-order force-transmission model before adding even more hinge segmentation. A geometry-dependent tendon moment arm and a nonlinear, calibration-based joint stiffness law would likely reduce more error than simply increasing the number of analytical springs again. On the mechanism side, the finger could also be refined by redistributing flexure compliance so that bending is less concentrated near the proximal joints and more consistent with the deformation pattern observed in FEA.

VIII. Conclusions

This project developed a complete analytical, numerical, and software-based validation workflow for a tendon-driven compliant finger. A closed-form PRBM was derived from torsional stiffness scaling, a FreeCAD/CalculiX model was built for FEA validation, and an interactive browser GUI was created to compare the one-spring PRBM, twenty-spring PRBM, and FEA response over a shared force range.

The primary conclusion is that the analytical models capture the expected bending trend, but the 20-spring model is generally closer to the FEA response than the 1-spring model in the validated 0–5 N range, while neither analytical model fully reproduces the staged nonlinear FEA behavior. The discrepancy is therefore not only a matter of hinge discretization; it is

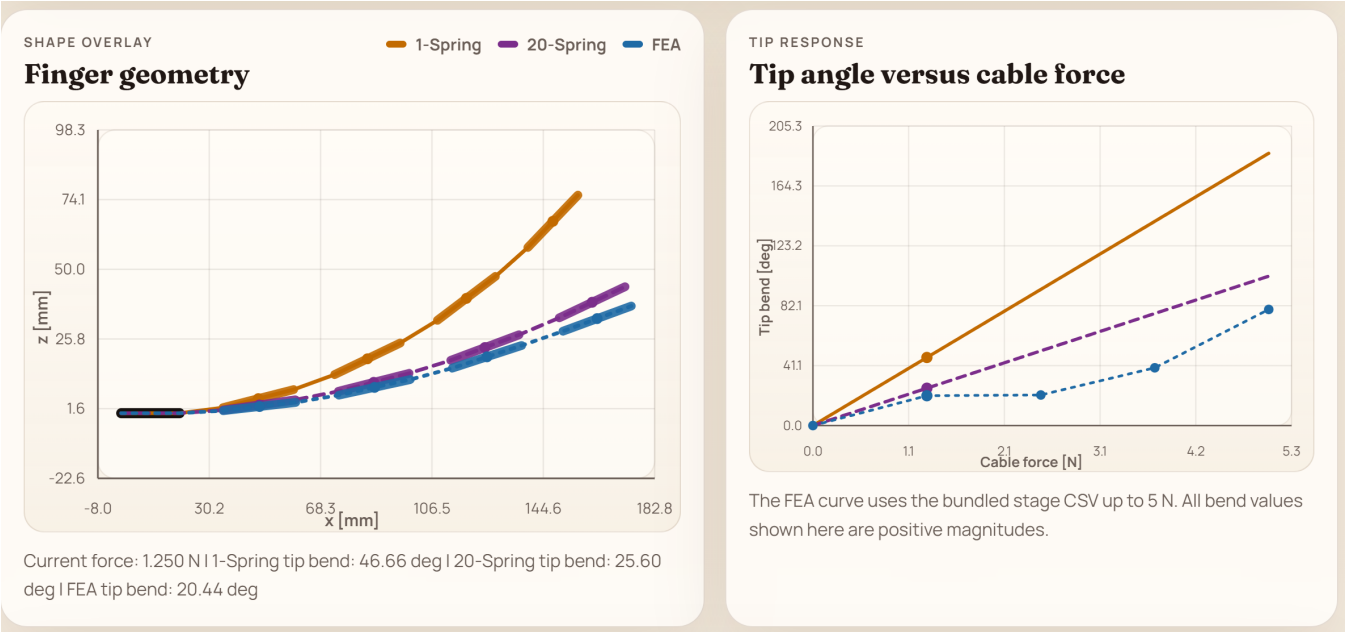

Fig. 6. Browser-based comparison GUI used in the final submission. The interface combines a shape overlay, a tip-response plot, summary metrics, and discrepancy readouts so that the analytical and FEA models can be compared at the same cable-force level.

primarily a consequence of simplified moment-arm, stiffness, and deformation assumptions.

The corresponding engineering recommendation is to treat the twenty-spring PRBM as the better reduced-order baseline, then improve it with a geometry-dependent tendon moment arm and a nonlinear stiffness calibration against FEA or experiment. Future work should also refine the high-load nonlinear FEA solution procedure and use the interactive GUI as the main environment for testing whether those model improvements actually reduce discrepancy at both the tip and joint levels.

IX. References

References

[1] L. L. Howell, *Compliant Mechanisms*. New York, NY, USA: Wiley, 2001.

[2] E. Todorov, T. Erez, and Y. Tassa, "MuJoCo: A physics engine for model-based control," in *Proc. IEEE/RSJ Int. Conf. Intelligent Robots and Systems*, 2012.

[3] J. Sillus, "Design, simulation, and manufacturing of a tendon-driven compliant robotic gripper with 3D printed force sensing capabilities for space applications," M.S. thesis, The Ohio State University, 2025.