MAE

Project 2 ME7751
Compliant Mechanisms

Jessica Sillus

THE OHIO STATE UNIVERSITY
COLLEGE OF ENGINEERING

Background

Designed a cable-driven complaint robotic gripper that has 4 thin flexure joints separated by thicker segments

Goal is to characterize the bending of the mechanism using different techniques including

- Pseudo Rigid Body Model
- Finite Element Analysis

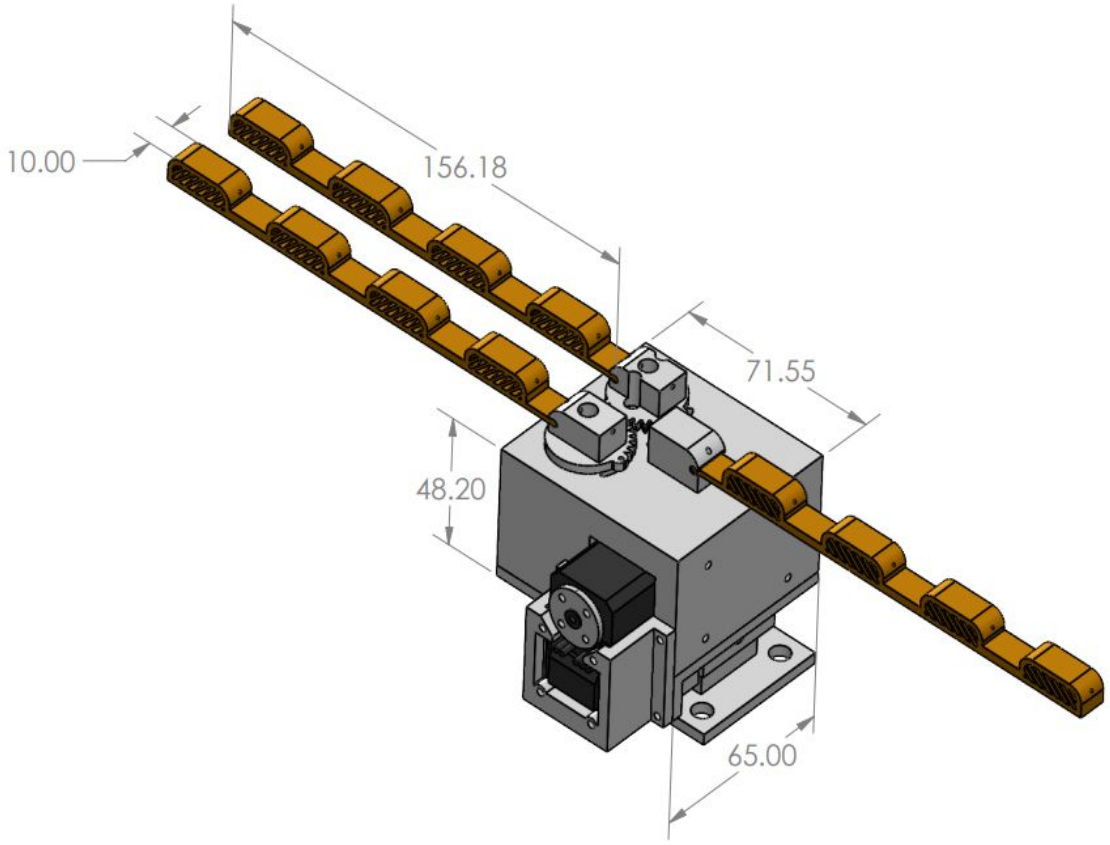

Theory

Pseudo Rigid Body Model (PRBM)

$$k = \frac{EI}{l}$$

Spring constant

$$I = \frac{1}{12} b t^3$$

Moment of Inertia

$$F_c = \frac{k\delta_\theta}{h}$$

Cable force

$$F_c = \frac{Ebt^3\delta_\theta}{12lh}$$

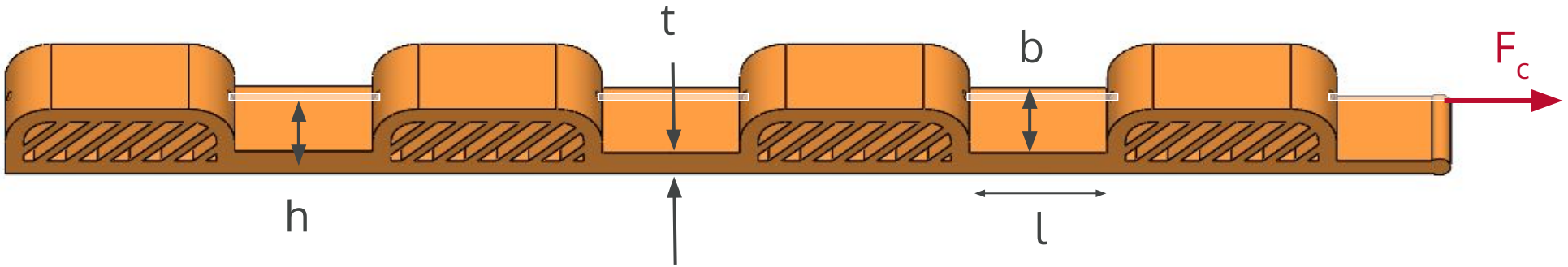

Kinematics Development

A moment balance can be completed on each joint

F is the external force applied by an object

l is the length of the joint

k is the spring constant

h is the distance from the joint center to the cable

Theta is the joint angle relative to the previous joint

Link 3:

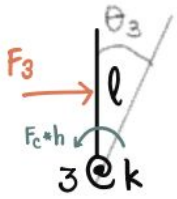

$$\Sigma M_3 = -F_c h + F_3\left(\frac{l}{2}\right) = -k_3 \Delta\theta_3$$

Link 2:

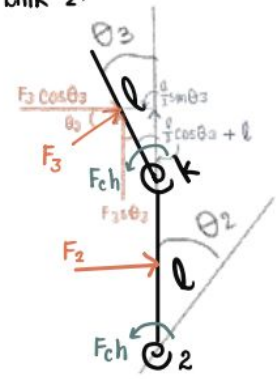

$$\Sigma M_2 = F_2\left(\frac{l}{2}\right) - F_c h - F_c h + F_3 \sin\theta_3\left(\frac{l}{2}\sin\theta_3\right) + F_3\cos\theta_3\left(\frac{l}{2}\cos\theta_3 + l\right) = -k_2\Delta\theta_2 - k_3\Delta\theta_3$$

$$F_2\left(\frac{l}{2}\right) - F_c h - F_c h + F_3\left(\frac{l}{2}\right)\left(\sin^2\theta_3 + \cos^2\theta_3\right) + F_3\cos\theta_3 l = -k_2\Delta\theta_2 - k_3\Delta\theta_3$$

$$F_2\left(\frac{l}{2}\right) - F_c h - F_c h + F_3\left(\frac{l}{2}\right) + F_3\cos\theta_3 l = -k_2\Delta\theta_2 - k_3\Delta\theta_3$$

Kinematics Development

After completing the moment balance for each joint the following equation can be derived for N joints providing N-1 equations

$$\sum_{i=j}^{N-1} F_i \left[\frac{l}{2} + l \sum_{m=j}^{i-1} cos(\theta_i - \theta_m) \right] - (N - j) F_c h = - \sum_{i=j}^{N-1} k_i \theta_i$$

To relate joint deflection to cable length we can define the change in length of cable reeled in by the motor is equal to the change in cable length from deflection

$$h \sum_{i=0}^{N-1} \theta_i = r_p \Delta\phi$$

PRBM Implementation

Assigning one torsional spring at each joint results in the following comparison between the PRBM and experimental result

Agreement is within 5 degrees for small deflections

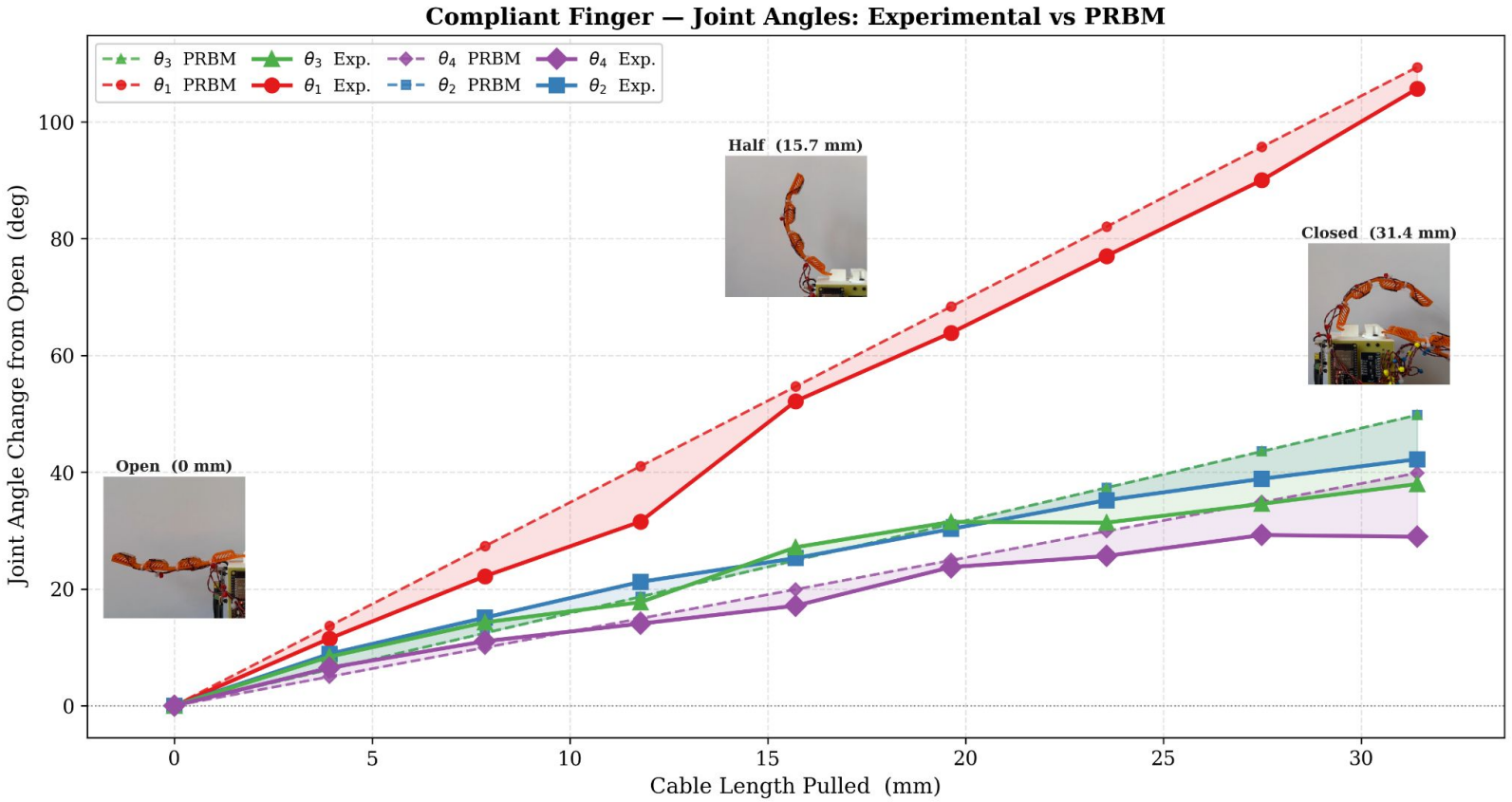

PRBM Implementation in Mujoco

Mujoco is a physics engine which models forces and compliant mechanisms through PRBM implementation

Two simulations were completed where one uses 1 torsional spring at the joint center and another uses 20 torsional springs spread across the joint

Much more realistic looking bending by adding additional springs

1 spring

20 springs

FEA Implementation Using FreeCAD

FEA simulations were completed using FreeCAD and assigning a fine mesh to the joints to allow for larger bending

TPU flexure joints use a 5 parameter Mooney-Rivlin hyperelastic model

Returned the expected result **as cable force increases, bending increases**

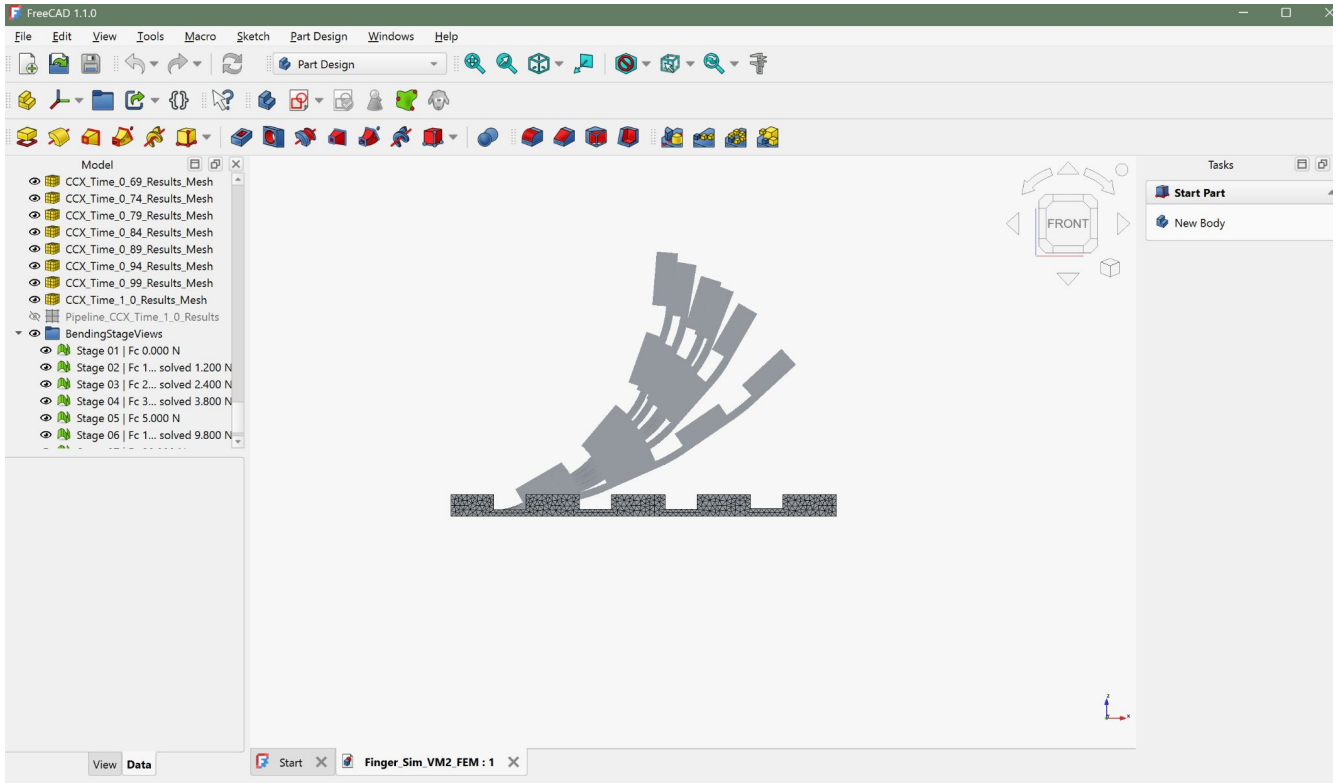

GUI Method Comparison Tool

SHAPE OVERLAY

1-Spring 20-Spring FEA

Finger geometry

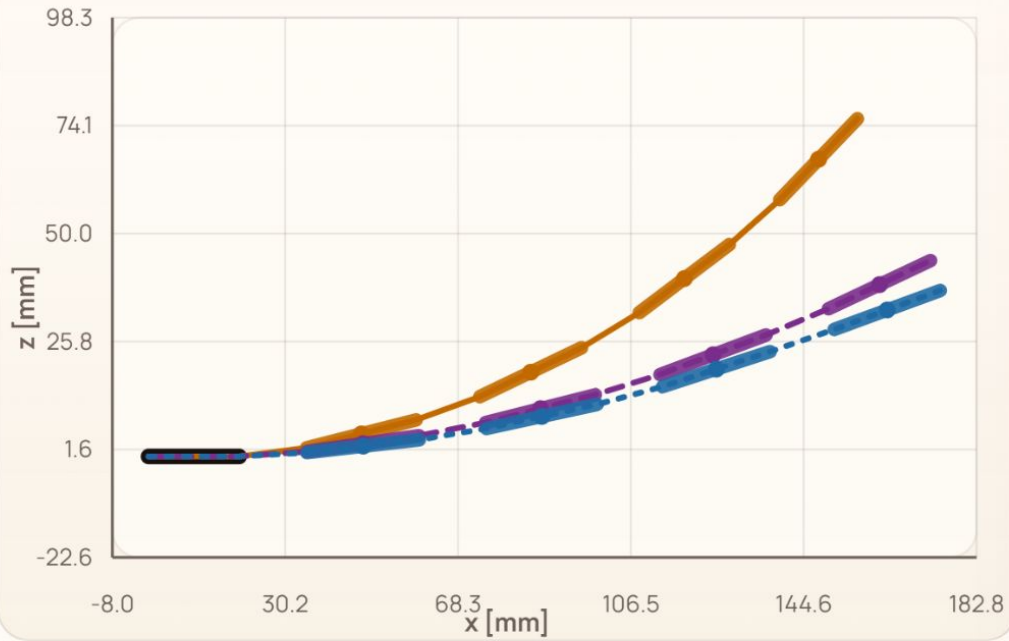

Current force: 1.250 N | 1-Spring tip bend: 46.66 deg | 20-Spring tip bend: 25.60 deg | FEA tip bend: 20.44 deg

TIP RESPONSE

Tip angle versus cable force

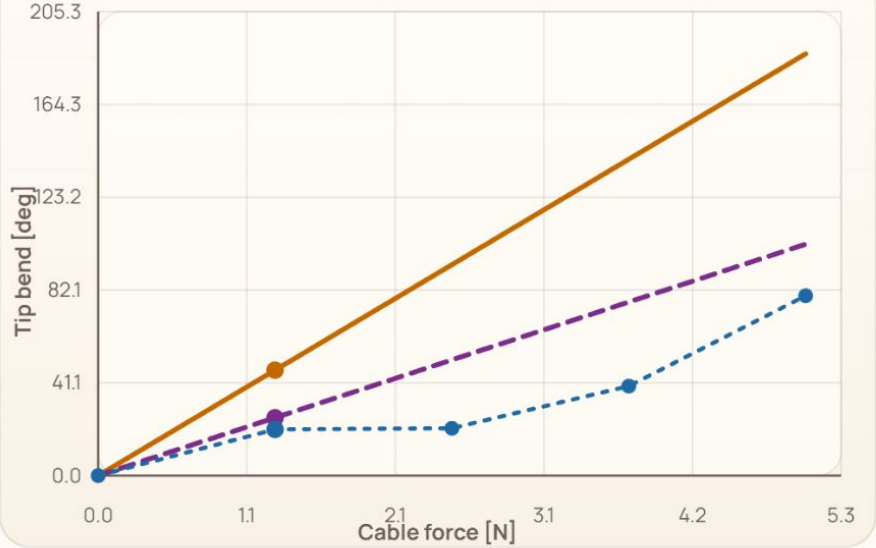

The FEA curve uses the bundled stage CSV up to 5 N. All bend values shown here are positive magnitudes.

Comparison

TABLE II
REPRESENTATIVE 1-SPRING, 20-SPRING, AND FEA TIP-ANGLE COMPARISON.

Cable force	1-spring PRBM	20-spring PRBM	FEA
1.25 N	46.66°	25.60°	20.44°
3.75 N	139.99°	76.81°	39.60°
5.00 N	186.65°	102.41°	79.59°

TABLE III
ABSOLUTE TIP-ANGLE ERROR BETWEEN METHODS.

Cable force	|1-spring−FEA|	|20-spring−FEA|	|1-spring−20-spring|
1.25 N	26.22°	5.16°	21.06°
3.75 N	100.39°	37.21°	63.18°
5.00 N	107.06°	22.82°	84.24°