Analytical and Finite-Element Discrepancy Assessment of a Tendon-Driven Compliant Finger

Jessica Sillus
ME 7751 Project 2
The Ohio State University
Email: sillus.1@osu.edu

***Abstract*—This project studies a four-joint tendon-driven compliant finger and compares a closed-form pseudo-rigid-body analytical model against a nonlinear finite-element model created in FreeCAD/CalculiX. The mechanism is composed of rigid links separated by TPU flexure joints with nonuniform thickness, so the problem is both geometrically simple enough for hand derivation and rich enough to expose important analytical–numerical discrepancy. The analytical model predicts joint rotation from tendon moment and torsional stiffness scaling, while the finite-element model resolves the full three-dimensional bending of the compliant joints. An interactive Python GUI was developed to visualize the analytical prediction, a twenty-spring distributed model, FEA-derived joint states, and optional experimental video-analysis data on the same force axis. The resulting comparison shows that the closed-form model captures the expected stiffness trend but overpredicts curl relative to the FEA data, especially as cable force increases. The discrepancy is traced to changing effective moment arm, distributed curvature, large-rotation effects, and the limitations of representing each flexure as a single linear torsional spring.**

***Index Terms*—compliant mechanisms, finite element analysis, pseudo-rigid-body model, tendon-driven finger, discrepancy analysis**

I. Introduction and Motivation

Compliant fingers are attractive for robotic grasping because they replace conventional pin joints with elastic deformation, reducing part count while improving passive adaptability. For preliminary design, pseudo-rigid-body models (PRBMs) are useful because they convert a continuous compliant structure into a tractable set of rigid links and rotational springs. That simplification is valuable only if its prediction error is understood.

The motivation for this project is therefore not just to build a PRBM, but to quantify how and why it deviates from a higher-fidelity model. A tendon-driven finger is a relevant validation problem because the same actuation input can be applied to a closed-form analytical model, a finite-element model, and an interactive comparison tool. This makes it possible to examine the discrepancy between analytical and FEA predictions in a way that is directly useful for mechanism design.

The compliant finger studied here is part of a larger tendon-driven gripper concept intended for lightweight robotic grasping. The design context is important because the finger is not an isolated beam specimen; it is a subsystem whose bending response directly affects overall gripper closing behavior, tendon routing, and practical packaging around the actuation hardware. Figure 1 shows the gripper concept with the compliant fingers attached to the central actuation assembly.

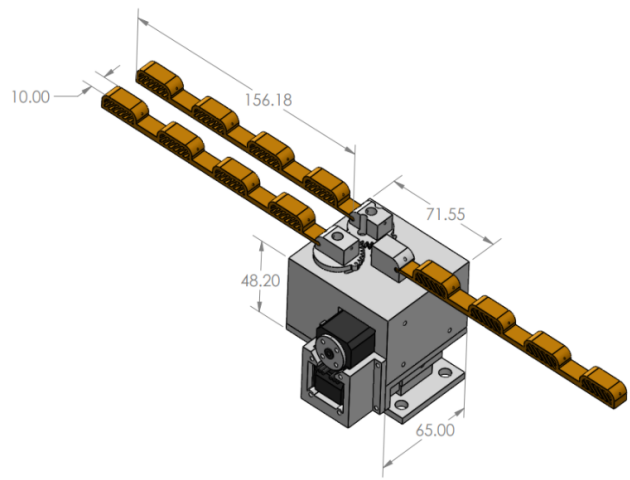

Fig. 1. Overall tendon-driven gripper concept showing the compliant finger geometry in its system-level context.

II. Mechanism Description and Problem Definition

The mechanism consists of a fixed base followed by four rigid phalange-like links connected by compliant TPU joints. Each compliant section has the same width and span, but the thickness varies along the finger:

$$t = (3.00,\ 3.25,\ 3.25,\ 3.50)\ \mathrm{mm}. \tag{1}$$

The thinner proximal joints are intentionally more compliant, so larger rotation is expected near the base.

A tendon load is applied to create a closing moment at each joint. In the analytical model this is represented using a constant tendon moment arm. In the FEA model the same nominal cable force is converted to equivalent joint moments applied about the local joint axes. The central problem is to determine how closely the analytical prediction of joint rotations and total finger curl matches the FEA response for the same loading schedule.

The principal geometric and modeling parameters are summarized in Table I.

TABLE I
FINGER GEOMETRY AND MODEL PARAMETERS.

Parameter	Value
Base block length	20.0 mm
Rigid segment length	25.0 mm
Compliant segment length	15.0 mm
Segment height	10.0 mm
Segment width	12.0 mm
Joint thicknesses	3.00, 3.25, 3.25, 3.50 mm
Nominal analytical moment arm	8.0 mm
Nominal joint stiffness	50.0 N-mm/rad at $t = 3.25$ mm

III. ANALYTICAL MODELING METHODOLOGY

A. Pseudo-Rigid-Body Approximation

Each compliant joint is replaced by a rotational spring. The baseline torsional stiffness is scaled with the cube of the joint thickness, consistent with rectangular beam bending:

$$I_i = \frac{bt_i^3}{12}, \tag{2}$$

$$k_i = \frac{EI_i}{l}, \tag{3}$$

$$k_i = k_{\text{nom}} \left(\frac{t_i}{t_{\text{nom}}} \right)^3. \tag{4}$$

In the implementation, the nominal torsional stiffness is

$$k_{\text{nom}} = 50.0 \text{ N}-\text{mm/rad} \tag{5}$$

at

$$t_{\text{nom}} = 3.25 \text{ mm}. \tag{6}$$

B. Cable-Force-to-Joint-Moment Relation

For a cable force F_c and constant moment arm h, the analytical model applies the same bending moment at each joint:

$$M_i = F_c h. \tag{7}$$

Each joint rotation is then

$$\theta_i = \frac{M_i}{k_i} = \frac{F_c h}{k_i}. \tag{8}$$

The predicted total curl angle is the sum of the joint rotations:

$$\theta_{\text{tip}} = \sum_{i=1}^{4} \theta_i. \tag{9}$$

This formulation is implemented in `Finger_PRBM.py` and evaluated directly as a function of cable force.

C. Kinematic and Cable-Length Closure Relations

The analytical model was also developed from a joint-by-joint moment balance using a PRBM description of the finger. The general balance used for joint j is

$$\sum_{i=j}^{N-1} F_i \left[\frac{l}{2} + l \sum_{m=j}^{i-1} \cos(\theta_i - \theta_m) \right] - (N-j) F_c h = -\sum_{i=j}^{N-1} k_i \theta_i, \tag{10}$$

where F_i represents the segment load contribution, l is the rigid segment length, F_c is the cable tension, h is the tendon moment arm, and k_i is the torsional stiffness of joint i. For the simplified static model used in the current implementation, this reduces to the constant-moment relation in the previous subsection, but Eq. (10) is the more general derivation basis developed for the project.

To relate finger deflection to the motor input, the reeled cable length is equated to the cable-length change induced by joint rotation:

$$h \sum_{i=0}^{N-1} \theta_i = r_p \Delta\phi, \tag{11}$$

where r_p is the pulley radius and $\Delta\phi$ is the motor rotation. Equation (11) is used in the discrepancy app to connect motor-angle and cable-length data to analytical and experimental joint deflection trends.

D. Distributed-Spring Comparison Model

To test whether a more distributed compliance representation changes the prediction materially, a second analytical model divides each compliant gap into twenty sub-springs while preserving the aggregate stiffness of the joint. This twenty-spring model is not the validation reference; instead, it is used as an intermediate analytical model to determine whether lumping all compliance at a single hinge is itself a major source of discrepancy.

IV. FEA METHODOLOGY

The finite-element model is generated in `Finger_Sim_FreeCAD.py`. The geometry is constructed directly from the same segment lengths and joint thicknesses used in the analytical model, so the comparison is performed on matched nominal geometry rather than on two unrelated finger definitions.

The FEA workflow is summarized as follows:

1) Build a three-dimensional solid finger in FreeCAD from rigid blocks and compliant joint sections.
2) Assign rigid-link material properties to the thick segments and a TPU hyperelastic material model to the compliant joints.
3) Generate a tetrahedral Gmsh mesh with local refinement maintained around the joints.
4) Apply a fixed constraint at the base face and closing moments at the four joints corresponding to the prescribed cable force and moment arm.
5) Solve the nonlinear static response in CalculiX over a staged loading ramp and export joint-bending results to `Finger_Sim_VM2_FEA_stages.csv`.

The staged force schedule used in the current dataset is

$$F_c = 0,\ 1.25,\ 2.50,\ 3.75,\ 5.00,\ 10.00,\ 20.00 \text{ N}, \tag{12}$$

which corresponds to multipliers of a 1 N base load. The exported FEA results include joint moments, joint rotations, inferred joint bend angles, and segment-center locations for each stage. Those quantities are then re-used by the comparison app as a surrogate response curve.

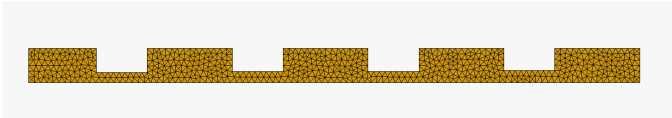

Fig. 2. Undeformed finite-element mesh of the compliant finger used for the FreeCAD/CalculiX simulations.

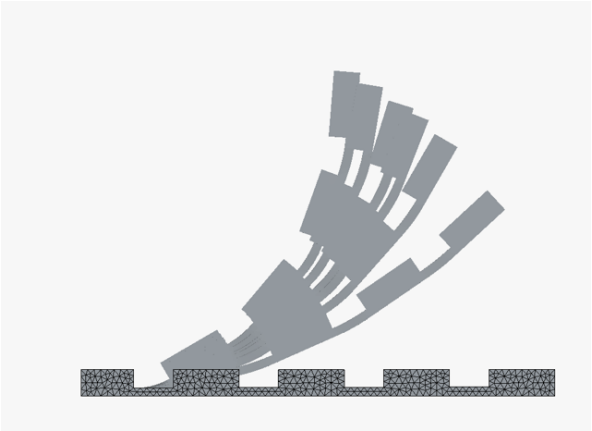

Fig. 3. FEA stage visualization showing the undeformed finger together with multiple bending states from the staged loading analysis.

V. Results and Comparison

The paper must compare three model levels: a single-spring PRBM, a twenty-spring distributed PRBM, and the finite-element model. For consistency, all angles in this section are reported as positive bend magnitudes. Table II summarizes representative tip-angle predictions from all three. The FEA values are taken from the staged response exported to `Finger_Sim_VM2_FEA_stages.csv`, while the two PRBM values are computed analytically for the same nominal cable force levels.

Table III makes the error between methods explicit. At the lowest nonzero load in the FEA dataset, the twenty-spring model is already closer to the finite-element response than the one-spring model: at 1.25 N, the 1-spring PRBM differs from FEA by about $26.2°$, whereas the 20-spring model differs by about $5.2°$. This supports the intuition that distributing compliance improves the geometric representation. However, the error table also shows that neither PRBM fully tracks the nonlinear FEA response as load increases. The 20-spring model remains closer than the 1-spring model in the current staged dataset, but both analytical models diverge from FEA at moderate and high load, which means segmentation alone does not remove the need for better force-transmission and material modeling.

The FEA data also show an important limitation of the current validation range. Beyond approximately 5 N, the raw stage export becomes non-monotonic in sign for the reported tip angle, even though the joint bend magnitudes remain informative. For that reason, the GUI uses the per-joint bend magnitudes from the staged FEA output and interpolates a monotonic surrogate response for comparison plots. This keeps the discrepancy analysis focused on physically meaningful joint bending rather than on a single signed angle that is sensitive to post-processing convention and nonlinear solver path.

TABLE II
Representative 1-spring, 20-spring, and FEA tip-angle comparison.

Cable force	1-spring PRBM	20-spring PRBM	FEA
1.25 N	$46.66°$	$25.60°$	$20.44°$
3.75 N	$139.99°$	$76.81°$	$39.60°$
5.00 N	$186.65°$	$102.41°$	$79.59°$

TABLE III
Absolute tip-angle error between methods.

Cable force	|1-spring−FEA|	|20-spring−FEA|	|1-spring−20-spring|
1.25 N	$26.22°$	$5.16°$	$21.06°$
3.75 N	$100.39°$	$37.21°$	$63.18°$
5.00 N	$107.06°$	$22.82°$	$84.24°$

Joint-level error gives a more stable comparison basis than the signed tip angle alone. At 1.25 N the joint-angle RMSE relative to FEA is $6.63°$ for the 1-spring PRBM and only $1.60°$ for the 20-spring PRBM. At 5.00 N the same ranking remains, with RMSE values of $27.25°$ and $6.15°$, respectively. This confirms that the distributed PRBM better matches the FEA joint-bending pattern, even though both analytical models eventually depart from the finite-element response.

Figures 4 and 5 illustrate the geometric difference between the lumped and distributed analytical models. The one-spring PRBM produces sharp kinks at each flexure, while the twenty-spring version spreads curvature over the joint length. Even so, the comparison app shows that simply distributing compliance does not eliminate the analytical–FEA gap; the dominant discrepancy remains between analytical assumptions and the nonlinear structural response resolved by FEA.

A. Comparison to Previous Experiment-vs-PRBM Results

In addition to the new FEA comparison, previous work compared the one-spring PRBM directly against measured joint angles from the physical finger. Those results provide an experimental benchmark for how well the simplest PRBM reproduces actual joint-by-joint motion. Table IV summarizes the previously reported error metrics for the four joints.

These experimental results are important because they show that the one-spring PRBM can still provide useful joint-angle predictions in a practical operating range, with joint-wise RMSE values of roughly $3.4°$ to $5.5°$. In other words, the simplest PRBM is not useless; it is a compact engineering approximation that captures trends reasonably well when judged against previous experiment. The FEA comparison in this paper adds a different type of validation by showing where the analytical assumptions begin to break down when a three-dimensional nonlinear structural model is used as the reference.

Fig. 4. One-spring PRBM configuration at peak actuation. Rotation is concentrated at four lumped hinges.

Fig. 5. Twenty-spring PRBM configuration at peak actuation. Curvature is smoother, but the model is still analytical rather than finite-element based.

VI. Interactive App Description

The interactive deliverable is `Finger_Discrepancy_App.py`, a Tkinter and Matplotlib application that compares four data sources on a common cable-force axis:

1) the one-spring analytical PRBM,
2) the twenty-spring analytical PRBM,
3) the staged FEA surrogate reconstructed from `Finger_Sim_VM2_FEA_stages.csv`, and
4) optional experimental joint-angle data imported from a video-analysis CSV.

The GUI provides a force slider, FEA stage buttons, overlaid centerline plots, discrepancy plots, and a comparison table. It also computes summary metrics such as tip-angle discrepancy, RMS joint discrepancy, and maximum joint discrepancy. When an experimental CSV is supplied, the app reports model-fit statistics including MAE, RMSE, and maximum absolute tip-angle error.

TABLE IV
Previously obtained one-spring PRBM versus experiment error metrics.

Joint	RMSE (deg)	Max |Error| (deg)	Mean error 0–11.8 mm	Mean error 23.6–31.4 mm
1	4.93	9.49	5.60	4.72
2	3.42	7.56	2.62	3.81
3	5.48	11.82	1.65	6.79
4	4.51	10.92	1.17	5.50

The app can be launched directly from Python. Typical usage is

```
python Finger_Discrepancy_App.py
```

or, to load external experimental data,

```
python Finger_Discrepancy_App.py
--experimental-csv joint_angles.csv
```

and the FEA stage data can be regenerated from FreeCAD/CalculiX using

```
python Finger_Discrepancy_App.py
--refresh-fea
```

provided the required FreeCAD environment is installed.

VII. Discussion

Taken together, the results establish a clear hierarchy among the models. The one-spring PRBM is the simplest and fastest representation. The twenty-spring PRBM improves the shape description and, in the low-load FEA comparison, reduces the discrepancy relative to the single-spring model. The FEA model is the highest-fidelity computational reference because it resolves distributed deformation, material assignment, and nonlinear structural response directly in the compliant geometry.

Several effects explain the gap between the PRBM predictions and the FEA response. First, the one-spring analytical model assumes a constant tendon moment arm, while the actual effective moment arm changes as the geometry deforms. Second, the FEA model distributes strain through a finite compliant volume, whereas the PRBMs concentrate it into ideal rotational springs. Third, material and geometric nonlinearities become important as the finger rotates, especially for large imposed moments. Fourth, the FEA export itself shows that high-load stages are sensitive to nonlinear solution path and post-processing convention, which is why the GUI emphasizes per-joint discrepancy rather than relying exclusively on a single scalar tip-angle output.

The previous experiment-vs-PRBM comparison provides a useful counterpoint. It shows that the one-spring model can match measured joint trends with only a few degrees of error

per joint in a physically tested configuration. That means the PRBM remains valuable as a low-order design tool. The new FEA comparison does not invalidate the earlier experimental usefulness; instead, it shows more specifically where the model assumptions become limiting. The current evidence suggests that the 20-spring formulation is the better analytical approximation to the FEA reference, while the 1-spring model is the only one that has been directly checked against experiment so far. This is an important design conclusion: if the goal is accurate force-to-curl prediction over a broad load range, effort should be spent first on improving the force transmission and stiffness assumptions, then on deciding how much spring segmentation is worth adding.

VIII. Conclusions

This project developed a complete analytical, numerical, and software-based validation workflow for a tendon-driven compliant finger. A closed-form PRBM was derived from torsional stiffness scaling, a FreeCAD/CalculiX model was built for FEA validation, and an interactive discrepancy app was created to compare analytical, FEA, and optional experimental responses.

The primary conclusion is that the analytical models capture the expected bending trend, but the 20-spring model is generally closer to the FEA response than the 1-spring model at low load, while neither analytical model fully reproduces the staged nonlinear FEA behavior over the entire force range. The discrepancy is therefore not only a matter of hinge discretization; it is primarily a consequence of simplified moment-arm, stiffness, and deformation assumptions.

Future work should focus on three improvements: calibration of the analytical stiffness and moment-arm model against the FEA response in the valid load range, refinement of the high-load nonlinear FEA solution procedure, and integration of the previous experimental joint-angle dataset with the current 1-spring, 20-spring, and FEA comparison so that all three validation levels can be shown on a unified set of plots.

IX. References

References

[1] L. L. Howell, *Compliant Mechanisms*. New York, NY, USA: Wiley, 2001.

[2] E. Todorov, T. Erez, and Y. Tassa, "MuJoCo: A physics engine for model-based control," in *Proc. IEEE/RSJ Int. Conf. Intelligent Robots and Systems*, 2012.

[3] J. Sillus, "Design, simulation, and manufacturing of a tendon-driven compliant robotic gripper with 3D printed force sensing capabilities for space applications," M.S. thesis, The Ohio State University, 2025.