MAE

Forward and Inverse Kinematics of the FANUC M-10iA Industrial Manipulator

ME7751 Project 1

Jessica Sillus

THE OHIO STATE UNIVERSITY
COLLEGE OF ENGINEERING

Introduction

- This project uses python to implement the forward and inverse kinematics of a FANUC M-10iA industrial robot manipulator
- This manipulator is widely used in industrial applications for material handling, machine tending, pick and place, assembly, and dispensing
- Results were compared to RoboDK to validate kinematics
- A web app was developed that animates the movement of the arm

DH Parameters

- Link transforms are derived using the standard Denavit-Hartenberg convention

Joint i	DH variable θ_i	d_i (mm)	a_i (mm)	α_i (deg)
1	J_1	450	150	-90
2	J_2	0	600	0
3	$-(J_2+J_3)$	0	200	-90
4	J_4	640	0	$+90$
5	$-J_5$	0	0	-90
6	J_6	0	0	0

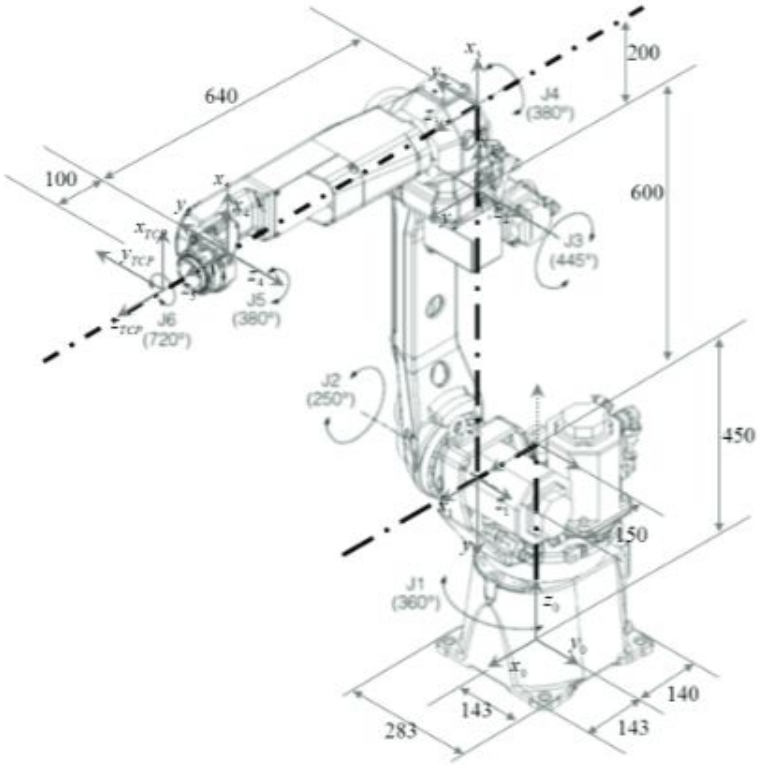

- Fanuc convention has J3 measured relative to J2 and J5 has opposite positive direction to DH convention
- To reconcile with RoboDK need to consider these conventions

DH Parameters

- Comparison of FANUC to PUMA when J2 is set to 45 degrees

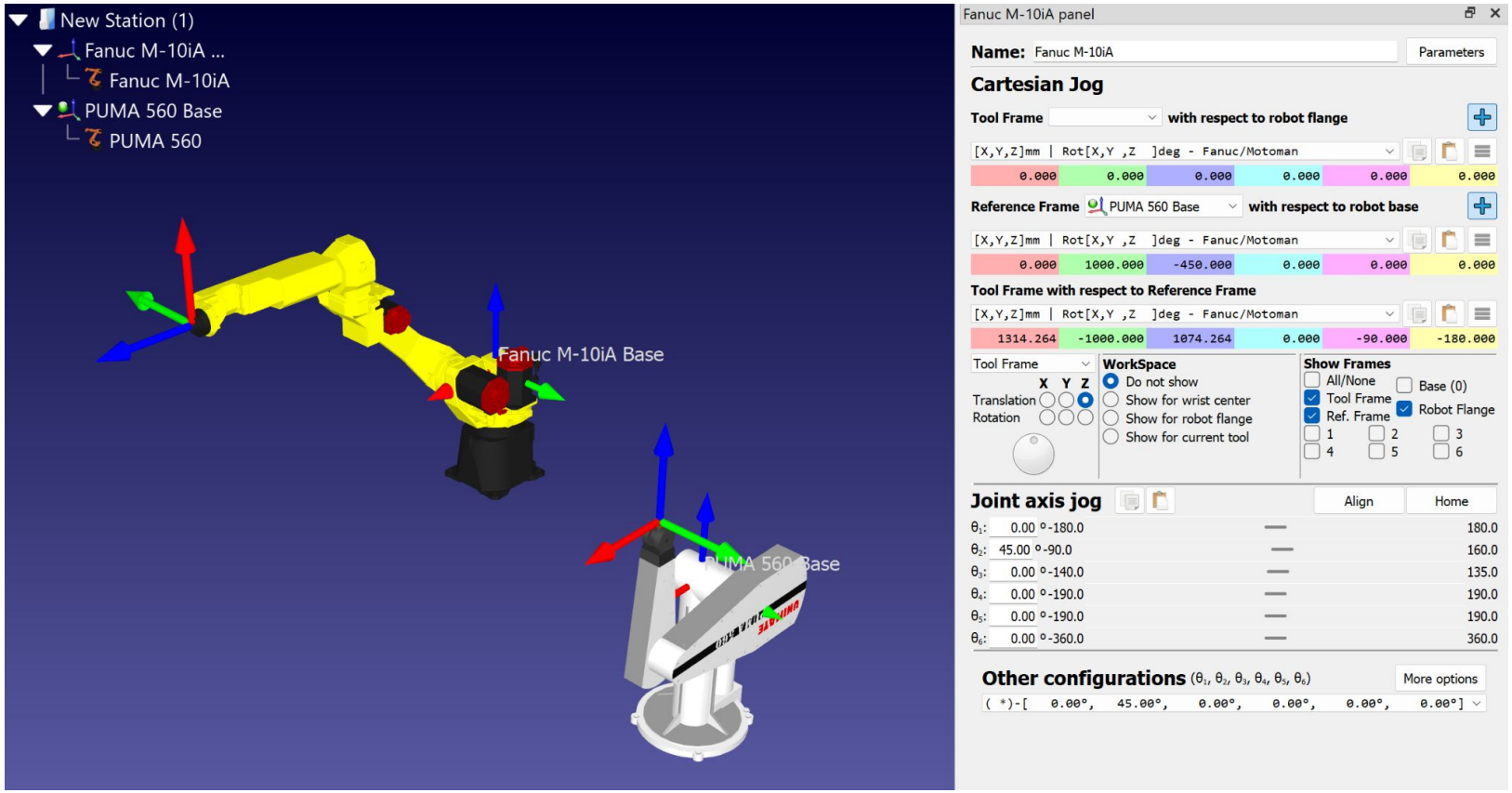

Forward Kinematics

- Use the determined mapping to get theta for DH parameters from FANUC encoder angles
- Transformation matrices are computed using the standard DH convention

$$\mathbf{A}_i = \begin{bmatrix} c_{\theta_i} & -s_{\theta_i} c_{\alpha_i} & s_{\theta_i} s_{\alpha_i} & a_i c_{\theta_i} \\ s_{\theta_i} & c_{\theta_i} c_{\alpha_i} & -c_{\theta_i} s_{\alpha_i} & a_i s_{\theta_i} \\ 0 & s_{\alpha_i} & c_{\alpha_i} & d_i \\ 0 & 0 & 0 & 1 \end{bmatrix}$$

- Each transform matrix is computed and multiplied in sequence
  - T06 = T01*T12*T23*T34*T45*T56
  - Intermediate transforms T01 to T06 are saved

Inverse Kinematics

- M-10iA has a spherical wrist allowing for decoupling
- Isolate wrist center by subtracting the wrist offset along the z-axis

$$\mathbf{p}_{wc} = \mathbf{p}_{06} - d_4\,\hat{\mathbf{z}}_{06}$$

- Theta 5 is recovered from R36(2,2) and theta 4 and 6 can be found using theta 5 (like PUMA example/homework)
- The shoulder angle theta 1 is determined from projecting the wrist center point on the base plane

  θ1 = atan2(py, px), θ1 = atan2(−py, −px)

- Law of cosines is used to determine theta 3
- Theta 2 is determined using theta 3
  - Detailed math at end of slides

Inverse Kinematics RoboDK Verification

- RoboDK was used to validate Inverse Kinematics
- 7 test configurations were used and compared with python results

Test	$\mathbf{q}_{\text{test}}$ (deg)
1	$[30, 45, -30, 60, -60, 45]$
2	$[45, 20, 10, 80, 0, -40]$
3	$[0, 0, 0, 0, 0, 0]$
4	$[180, 160, 20, 190, 190, 360]$
5	$[-180, -90, -5, -190, -190, -360]$
6	$[90, 0, 0, 180, -180, 180]$
7	$[45, -90, 0, 0, -90, 0]$

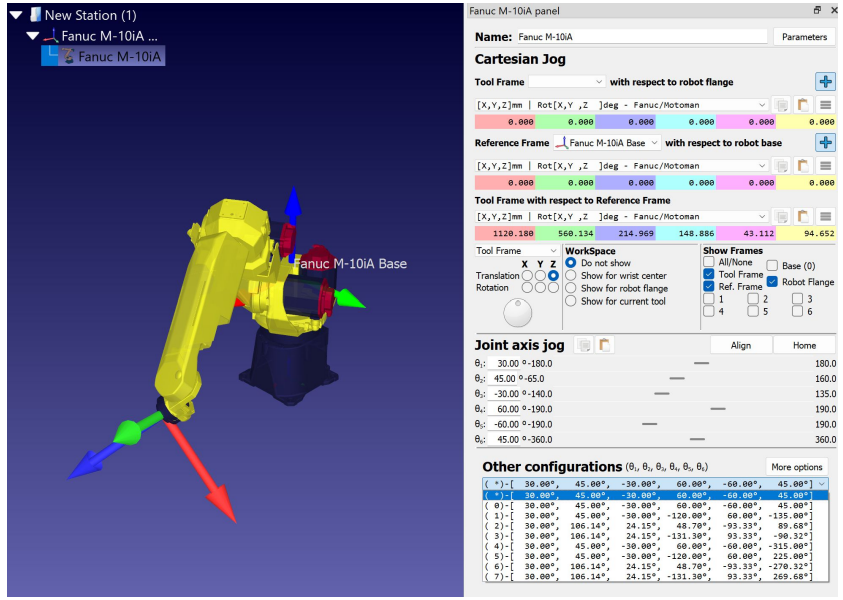

Web App

- A motion planning application was developed in HTML to demonstrate the implemented FK and IK methods in an interactive 3D environment
- Three.js 3D renderer is used for real-time robot visualization and Chart.js charting suite is used for monitoring joint states
- Trajectories use an S-curve velocity profile which eliminates instantaneous velocity changes for smoother movement

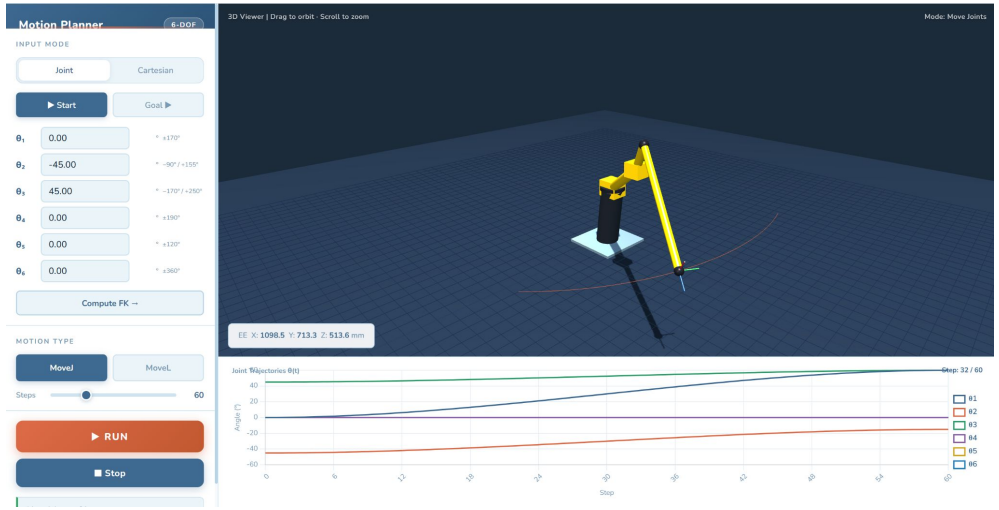

$$\sigma(s) = s^2(3 - 2s), \quad s \in [0, 1]$$

Web App

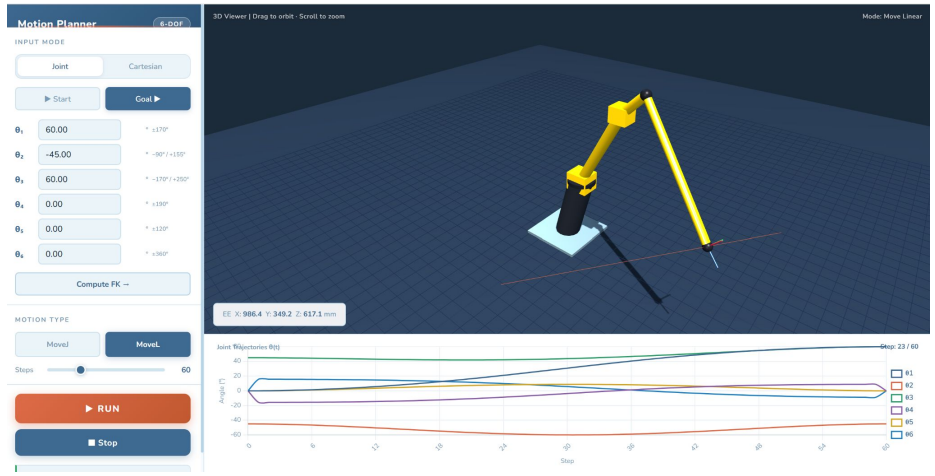

MoveL

- Constrains the end-effector to follow a straight line between two poses in Cartesian space
- Essential for tasks such as welding or sealing where the tool path must be precisely controlled

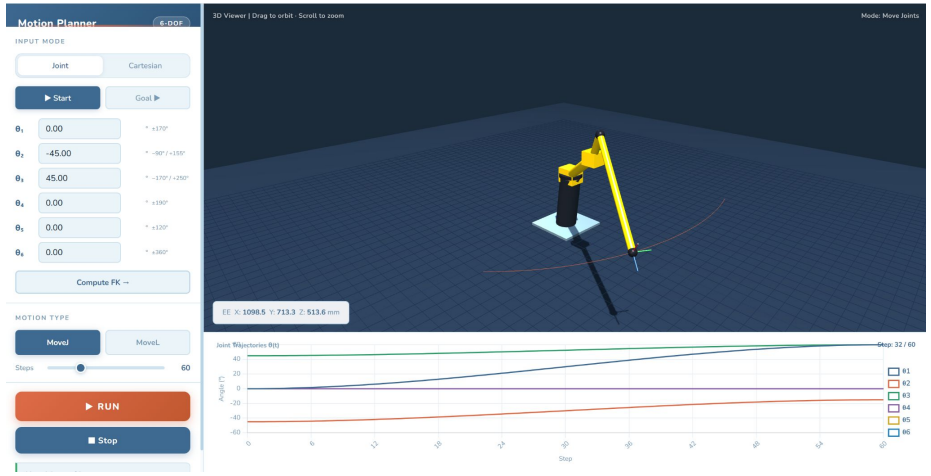

MoveJ

- Provides the most computationally efficient transition between two configurations
  Synchronizes all six joint axes to start and stop simultaneously

Web App Demo

IK Derivation

$$R_{36} = R_z(\theta_4) \cdot R_y(\theta_5) \cdot R_z(\theta_6)$$

$$R_{36}(2,2) = c(\theta_5)$$

$$\theta_5 = \mathrm{atan2}(s\theta_5, c\theta_5),\ \mathrm{atan2}(-s\theta_5, c\theta_5)$$

Singularity when $s\theta_5 = 0$ $(J5 = 0, 180°) \rightarrow$ set $\theta_4 = 0$.

$$R_{36}(0,2) = -s\theta_5 \cdot c\theta_4$$

$$R_{36}(1,2) = -s\theta_5 \cdot s\theta_4$$

$$\theta_4 = \mathrm{atan2}\left(\frac{-R_{36}(1,2)}{s\theta_5}, \frac{-R_{36}(0,2)}{s\theta_5}\right)$$

$$R_{36}(2,0) = s\theta_5 \cdot c\theta_6$$

$$R_{36}(2,1) = -s\theta_5 \cdot s\theta_6$$

$$\theta_6 = \mathrm{atan2}\left(\frac{-R_{36}(2,1)}{s\theta_5}, \frac{R_{36}(2,0)}{s\theta_5}\right)$$

ABOVE

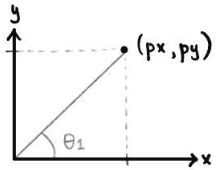

$$\theta_1 = \mathrm{atan2}(py, px)$$
$$= \mathrm{atan2}(-py, -px)$$

$$r = px\cos\theta_1 + py\sin\theta_1$$

SIDE

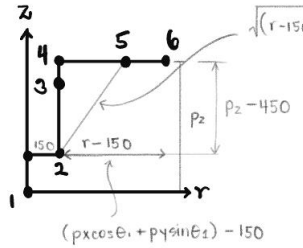

$$\sqrt{(r-150)^2 + (p_z - 450)^2} = \mathcal{R}$$

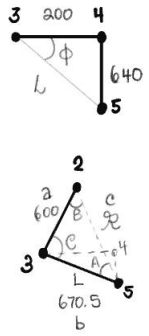

$$L = \sqrt{640^2 + 200^2} = 670.5$$

$$\phi = \mathrm{atan2}(640, 200) = 72.6°$$

$$\cos(C) = (a^2 + b^2 - c^2)/2ab$$

$$C = \mathrm{acos}\left((a^2 + b^2 - c^2)/2ab\right)$$

$$\theta_3 = C - \phi$$

$$\theta_3 = \mathrm{acos}\left((600^2 + 670.5^2 - \mathcal{R}^2)/2(600 \cdot 670.5)\right) - \phi$$

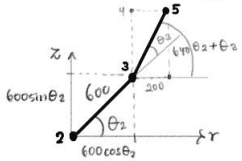

A3 200
D4 640

$$r = 600\cos\theta_2 + 200\cos(\theta_2+\theta_3) - 640\sin(\theta_2+\theta_3)$$
$$z = 600\sin\theta_2 + 200\sin(\theta_2+\theta_3) + 640\cos(\theta_2+\theta_3)$$

$$\sqrt{(r-150)^2 + (p_z - 450)^2}$$
$$= 600\cos\theta_2 + 200\cos(\theta_2+\theta_3) - 640\sin(\theta_2+\theta_3)$$

$$p_z - 450 = 600\sin\theta_2 + 200\sin(\theta_2+\theta_3) + 640\cos(\theta_2+\theta_3)$$

$$M = A_2 + A_3\cos\theta_3 - D_4\sin\theta_3$$
$$N = A_3\sin\theta_3 + D_4\cos\theta_3$$

$$\cos\theta_2 = (M \cdot \mathcal{R} + N \cdot (p_z - 450))/(M^2 + N^2)$$
$$\sin\theta_2 = (M \cdot (p_z - 450) - N \cdot \mathcal{R})/(M^2 + N^2)$$
$$\theta_2 = \mathrm{atan2}(s\theta_2, c\theta_2)$$