# Midterm Exam 1

Physics 152 – Fall 2025

October 2nd

Please circle your professor: Martini Peroomian Wirthwein

First Letter of your last name: P

Name: Jesus Peralta-Estrada Student ID#: 6925482118

Show all work and reasoning. Use the space provided and the back of the page if necessary. Please circle or box your final answer.

**Problem 1 (25 points)** Four point charges with equal charge $q$ are arranged on the corners of a square with side length $a$ as shown in the figure below. The point A is at position $\left(\frac{a}{2}, \frac{a}{2}\right)$ and the point B is at position $\left(\frac{3a}{2}, \frac{3a}{2}\right)$.

$\sqrt{\frac{a^2}{4} + \frac{9a^2}{4}} = \sqrt{\frac{10a^2}{4}} = \sqrt{\frac{10a^2}{4}}$

**(a) (12 points)** Find the electric field (magnitude and direction) at the points A and B in the diagram.

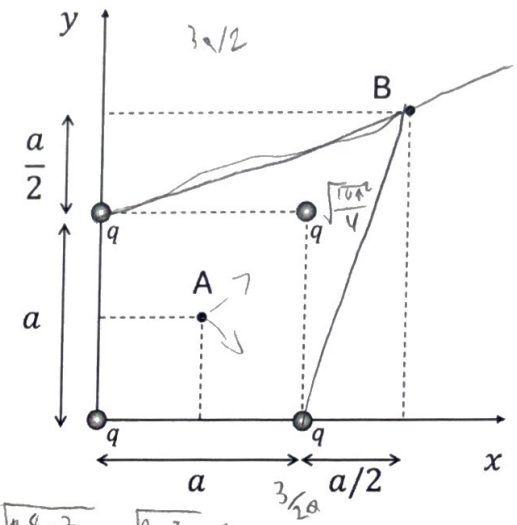


$E_A = \frac{k_e q}{r^2}$

$E_A = 0$ Due to symmetry, the charges are the same and distances are the same so x and y components cancel

$\sqrt{\frac{9a^2}{4} + \frac{9a^2}{4}} = \sqrt{\frac{18a^2}{4}} = \sqrt{\frac{9a^2}{2}} = \frac{3a}{\sqrt{2}}$

$E_{Bx} = \frac{k_e q_1}{\frac{9a^2}{2}} \cos\theta$

$\sqrt{\frac{9a^2}{4} + \frac{9a^2}{4}}$ $\theta$ B

$E_{Bx} = \frac{k_e q_1}{\frac{9a^2}{2}} \frac{\sqrt{2}}{2} + \frac{k_e q_2}{\frac{a^2}{2}} \frac{\sqrt{2}}{2} + \frac{k_e q_3}{\frac{10a^2}{4}}$

$\cos\theta = \frac{\frac{3a}{2}}{\sqrt{\frac{9a^2}{2}}} = \frac{\frac{3a}{2}}{\frac{3a}{\sqrt{2}}} = \frac{\sqrt{2}}{2}$ for $q_3$

$r = \sqrt{\frac{a^2}{4} + \frac{a^2}{4}} = \sqrt{\frac{2a^2}{4}} = \sqrt{\frac{a^2}{2}}$

$\cos\theta = \frac{a/2}{a/\sqrt{2}} = \frac{\sqrt{2}}{2}$

I would get the x-components first from trig and then y-components.

Magnitude $= \sqrt{x^2 + y^2}$

**Problem 1, cont.**

**(b) (8 points)** Find the electric potential at the points A and B, assuming that $V = 0$ at infinity.

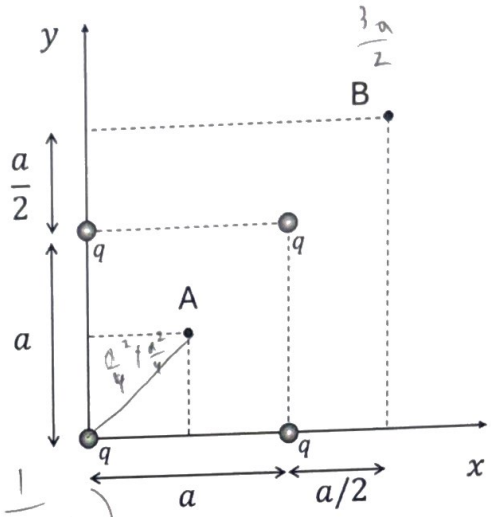


$$V_A = \frac{k_e q}{\sqrt{\frac{a^2}{2}}} + \frac{k_e q}{}$$

$$\boxed{V_A = \frac{4k_e q}{\sqrt{\frac{a^2}{2}}}}$$

$$V_B = k_e q\left(\frac{1}{\sqrt{\frac{9a^2}{4}+\frac{9a^2}{4}}} + \frac{1}{\sqrt{\frac{a^2}{4}+\frac{a^2}{4}}} + \frac{1}{\sqrt{\frac{a^2}{4}+\frac{9a^2}{4}}} + \frac{1}{\sqrt{\frac{a^2}{4}+\frac{9a^2}{4}}}\right)$$

$$V_B = k_e q\left(\frac{1}{\sqrt{\frac{9a^2}{2}}} + \frac{1}{\sqrt{\frac{a^2}{2}}} + \frac{1}{\sqrt{\frac{10a^2}{4}}} + \frac{1}{\sqrt{\frac{10a^2}{4}}}\right)$$

**(c) (5 points)** How much work is done <u>by the electrostatic field</u> on a point charge $Q$ as it moves from point A to B?

$$W_{a\to b} = \int_a^b F\, d\vec{s} = -\Delta U_{a\to b}$$

**Problem 2 (25 points)** A rod of length $\ell$ and positive uniform linear charge density $\lambda$ (charge per unit length) extends from $x = -\ell$ to $x = 0$ along the $x$ axis and another rod with the same length and negative uniform linear charge density $-\lambda$ extends from $x = 0$ to $x = \ell$ as shown in the figure below.

2x

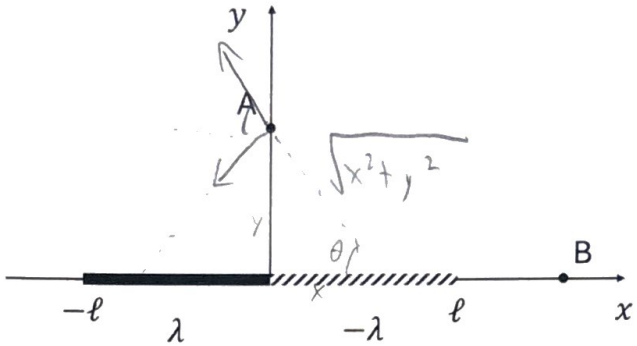


**(a) (8 points)** Find the electric field (magnitude and direction) at a distance $y$ above the origin at point A.

$E = \int dE \cos\theta \qquad \frac{x}{\sqrt{x^2+y^2}}$

$\lambda = \frac{Q}{\ell}$

$d\ell \quad \lambda = dq$

$dx\lambda = dq$

$= \int \frac{k_e dq}{r^2} \frac{x}{\sqrt{x^2+y^2}}$

since x components are the same

$= k_e \lambda 2 \int_0^{\ell} \frac{x\,dx}{(x^2+y^2)^{3/2}} = k_e \lambda 2 \left( -\frac{1}{\sqrt{x^2+y^2}} \right)\Big|_0^{\ell} = k_e \lambda 2 \left( -\frac{1}{\sqrt{\ell^2+y^2}} + \frac{1}{y} \right)$

$= k_e \lambda 2 \left( \frac{1}{y} - \frac{1}{\sqrt{\ell^2+y^2}} \right)$

$E = \left( k_e \lambda 2 \left( \frac{1}{y} - \frac{1}{\sqrt{\ell^2+y^2}} \right) \right) \hat{i}$

I confused the charges but basically get the $E = \int dE$ and the y-

**Problem 2, cont.**

**(b) (4 points)** Find the electric potential $V(y)$ at the point A. Assume $V = 0$ at infinity.

$V = \int \frac{k_e dq}{r}$ $\quad dq = dx\lambda$

$V = k_e \int_0^{\ell} \frac{dx\lambda}{\sqrt{x^2+y^2}} = k_e\lambda \int_0^{\ell} \frac{dx}{\sqrt{x^2+y^2}} = k_e\lambda \ln\left(x + \sqrt{x^2+y^2}\right)\Big|_0^{\ell}$

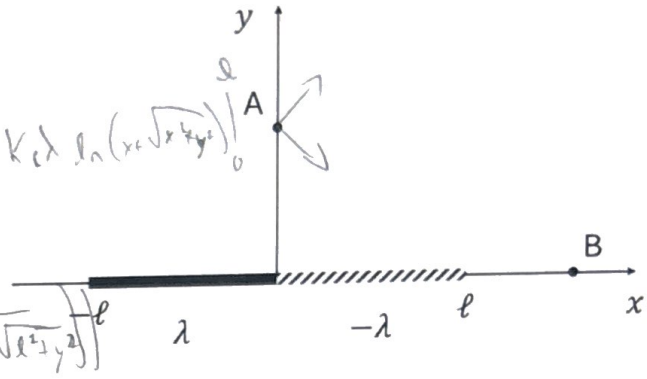


$= k_e\lambda\left(\ln\left(\frac{\ell + \sqrt{\ell^2+y^2}}{y}\right)\right) + k_e\lambda\left(\ln\left(\frac{y}{-\ell + \sqrt{\ell^2+y^2}}\right)\right)$

$V = -k_e\lambda\left(\ln\left(\frac{\ell + \sqrt{\ell^2+y^2}}{y}\right)\right) + k_e\lambda\left(\ln\left(\frac{y}{\ell + \sqrt{\ell^2+y^2}}\right)\right)$

**(c) (8 points)** Now find the electric potential $V(x)$ at the point B located a distance $x$ from the origin.

$V = \int \frac{k_e dq}{r}$

**Problem 2, cont.**

**(d) (5 points)** Using the electric potential you found in part (c), find the electric field at the point B.

**Problem 3 (25 points)** An insulating (non-conducting) solid sphere with total charge $+Q$ and radius $a$ is surrounded by a concentric conducting shell with total charge $-2Q$, inner radius $b$ and outer radius $c$ ($a < b < c$). The solid sphere has a non-uniform volume charge density $\rho(r) = \alpha/r$ where $\alpha$ (Greek letter "alpha") is some unknown constant to be determined.

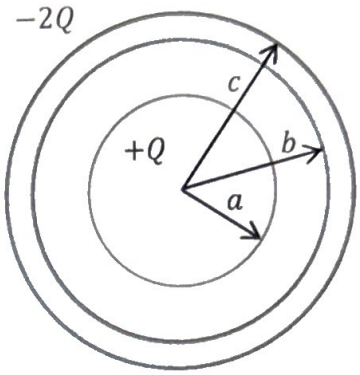


**(a) (5 points)** Determine the constant $\alpha$ in terms of the total charge $Q$ and radius $a$.

$Q = \int \rho dV$

$\rho = \frac{Q}{V}$

$[\rho] = \frac{C}{m^3}$

$\rho(a) = \alpha/a$

$\frac{C}{m^3} = \frac{\alpha}{m}$

$\alpha = \frac{C}{m^2}$

**(b) (5 points)** Find an exact equation for the electric field inside the solid sphere ($r < a$). Your answer should not include $\alpha$ [substitute your result from part (a)].

$\oint EA = EA = \frac{Q_{enc}}{\varepsilon_0}$

Q non-uniform

$\int \rho dV = \int_0^r \alpha \rho 4\pi r^2 dr$

$= \int_0^r \rho \alpha 4\pi \, dr$

$= 4\pi\rho \frac{r^4}{4} = \pi\rho r^4 \Big|_0^r$

$= \rho\pi r^4$

$EA = \rho\pi r^2$

$E 4\pi r^2 = \frac{\rho \pi r^4}{\varepsilon_0}$

$E = \frac{\rho r^2}{4\varepsilon_0}$

**Problem 3, cont.**

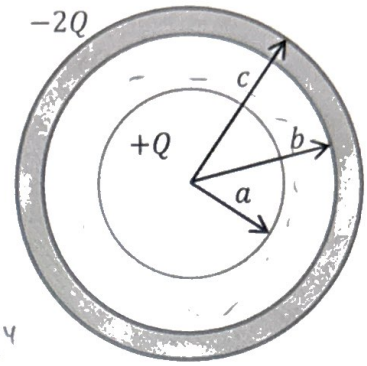


**(c) (3 points)** Find an exact equation for the electric field between the solid sphere and the spherical shell ($a < r < b$).

$\int_a^b$

$EA = \frac{Q_{enc}}{\varepsilon_0}$

$\int d\rho_b$

$E(4\pi r^2) = \underline{\rho\pi b^4 - a^4}$

$\int_0 \rightarrow \rho\pi r^4$

$\rho\pi b^4 - a^4$

**(d) (3 points)** Find an exact equation for the electric field inside the spherical shell ($b < r < c$).

**(e) (3 points)** Find an exact equation for the electric field outside the spherical shell ($r > c$).

**Problem 3, cont.**

**(f) (6 points)** Determine the electric potential at $r = a/2$ (inside the solid sphere) if $V = 0$ for all points on the outer surface of the conducting spherical shell (at $r = c$).

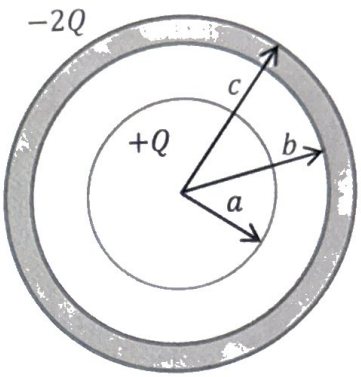

**Problem 4 (25 Points).** In the figure on the right, the capacitors have the following capacitances: $C_1 = 3.00\ \mu F$, $C_2 = 6.00\ \mu F$, $C_3 = 8.00\ \mu F$, $C_4 = 4.00\ \mu F$, $C_5 = 8.00\ \mu F$, and $C_6 = 12.00\ \mu F$.

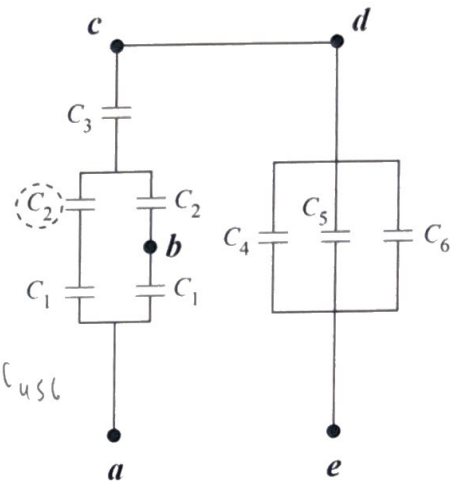


**(a) (8 points)** Compute the equivalent capacitance of the network of capacitors between points ***a*** and ***e***. Make sure to draw the intermediate circuit diagrams as you simplify the circuit. This will help answer the remaining parts of the question below.

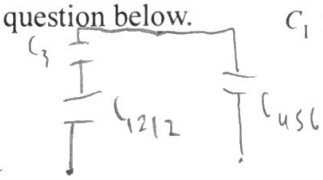


$C_{12} = C_1 + C_2$

$= \frac{1}{3\mu F} + \frac{1}{6\mu F} = \frac{3}{6\mu F} = 2\ \mu F = C_{12}$

$C_{1212} = C_{12} + C_{12} = 4\ \mu F$

$C_{12123} = C_{1212} + C_3 = \frac{1}{4\mu F} + \frac{1}{8\mu F} = \frac{3}{8\mu F} = \frac{8}{3}\ \mu F$

$C_4 + C_5 + C_6 = C_{456} = 4\mu F + 8\mu F + 12\mu F = 24\ \mu F$

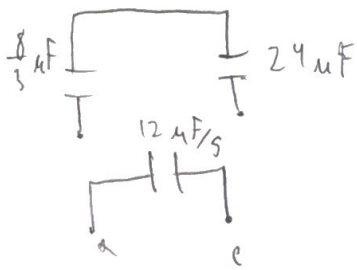


$C_{eq} = \frac{1}{24\mu F} + \frac{1}{\frac{8}{3}\mu F} = \frac{5}{12\mu F} = \frac{12\ \mu F}{5}$

$C_{eq} = \frac{12\ \mu F}{5}$

**(b) (3 points)** The charge on capacitor $C_3$ is 300 μC. What is the potential difference between points ***a*** and ***e*** ($\Delta V_{ae}$) in the circuit?

$Q_{tot} = Q_3 = Q_{1212} = Q_{456}$

$C_{eq} = \frac{Q}{\Delta V}$

$C_{eq}\Delta V = Q$

$\Delta V = \frac{300\ \mu C}{\frac{12\ \mu F}{5}} = 125\ V$

**Problem 4, cont.**

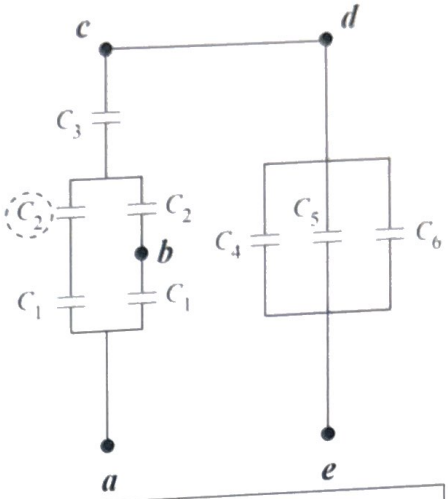


**(c) (8 points)** Using the voltage found in part (b), compute the charges on the following capacitors: the $C_2$ capacitor that has the dashed circle, $C_3$, and $C_4$. **Show all your work, and enter your answers for $Q_2$, $Q_3$, and $Q_4$ in the box below. Make sure to include units in your answer.**

$C = \frac{Q}{\Delta V}$

$\frac{1}{C_3} + \frac{1}{C_{456}}$

$\frac{1}{24\mu F} + \frac{1}{8\mu F} = \frac{4}{24\mu F} = 6\mu F = C_{456}$

$\Delta V = \frac{Q_{1212}}{C_{1212}} = \frac{300\mu C}{4\mu F} = 75\ V_{1212}$

$Q_{12} = 150\mu C$

$Q_2 = 150\mu C$

$\Delta V_3 = \frac{Q_3}{C_3} = \frac{300\mu C}{8\mu F} = \frac{75}{2} V = 37.5\ V$

| Capacitor | Charge |
|---|---|
| $C_2$ | $150\mu C$ |
| $C_3$ | $300\mu C$ |
| $C_4$ | |

**(d) (6 points)** Using the voltage found in part (b), and assuming that point $\boldsymbol{a}$ is at a higher potential than $\boldsymbol{e}$, compute the potential difference $\Delta V_{db}$ (or $V_d - V_b$) between points $\boldsymbol{b}$ and $\boldsymbol{d}$ in the circuit.