HARNESS NAME/DESCRIPTION	WIRE NUMBER	COLOR	FROM/CONNECTION TYPE			TO/CONNECTION TYPE			LENGTH	WIRE GAUGE
			FROM/CONNECTION TYPE	TERMINAL NUMBER	END MARKING	TO	TERMINAL NUMBER	END MARKING		
THREE PHASE IFM HARNESS	130	ORN	UCB IFM-1	211A	UCB IFM-1	PL1-4	216	PL1-4	23.5	20
	131	WHT	UCB IFM-3	211A	UCB IFM-3	PL1-1	216	PL1-1	23.5	20
	132	GRY	UCB IFM-2	211A	UCB IFM-2	PL1-7	216	PL1-7	23.5	20
	133	GRN/YEL	SHEETMETAL	90	GROUND	PL1-12	216C	PL1-12	32.5	14
	134	BLK	TB1 21	50	TB1 21	U4	60	U4	32.5	10
	135	YEL	TB1 22	50	TB1 22	U5	60	U5	32.5	10
	136	BLU	TB1 23	50	TB1 23	U6	60	U6	32.5	10
	137	RED	MOTOR FAULT RELAY, PL12-1	211	PL12-1	PL1-8	216	PL1-8	22.5	20
	138	RED	MOTOR FAULT RELAY, PL12-2	211	PL12-2	PL1-11	216	PL1-11	22.5	20

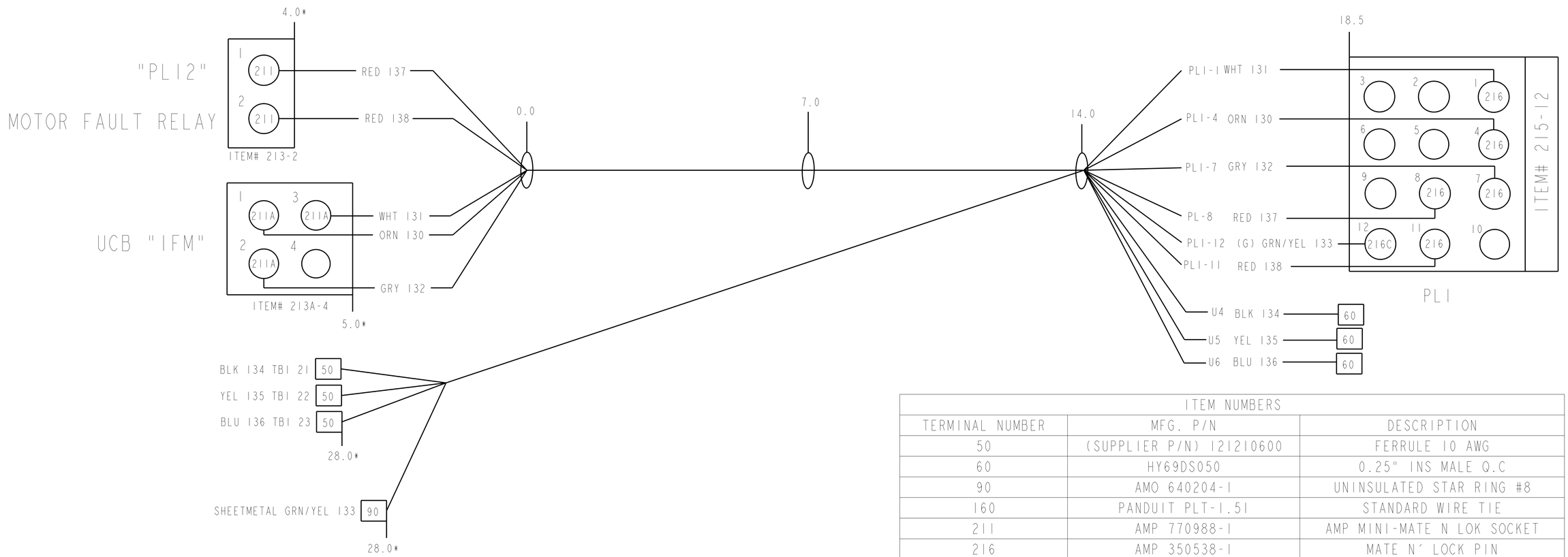

ITEM NUMBERS		
TERMINAL NUMBER	MFG. P/N	DESCRIPTION
50	(SUPPLIER P/N) 121210600	FERRULE 10 AWG
60	HY69DS050	0.25" INS MALE Q.C
90	AMO 640204-1	UNINSULATED STAR RING #8
160	PANDUIT PLT-1.51	STANDARD WIRE TIE
211	AMP 770988-1	AMP MINI-MATE N LOK SOCKET
216	AMP 350538-1	MATE N' LOCK PIN
211A	AMP 794229-1	AMP MINI-MATE N LOK 2 SOCKET
216C	AMP 350669-1	MATE N' LOCK GROUND PIN
02	-	STRIP 0.25"

NOTES:
1. * DENOTES MEASUREMENT FROM PREVIOUS WIRE TIE.
2. 0 = WIRE TIE TO BE ITEM 160 OF QTY 3.
3. ALL LENGTH IN INCHES
4. LENGTHS ARE CUT LENGTHS OF WIRES.
5. WIRE TO BE UL & CSA LABELLED.
6. WIRE MUST HAVE INSULATION RATING OF 600V & 105°C
7. END MARKING TO BE INKJET OR HOT STAMP OR WRAP AROUND LABELS PER WIRE LIST CHART.
8. NO FLAGS FOR WIRE MARKING.
9. STRIP TERMINAL WIRES TO MANUFACTURING SPECIFICATION.
10. LABEL ALL PLUGS WITH TEXT MARKED WITH QUOTES
11. IDENTICAL TERMINALS ON REEL CAN BE SUBSTITUTED FOR LOOSE PIECE.
12. USE IPC-620 REQUIREMENTS FOR WIRE TOLERANCES OTHERWISE SPECIFIED.

WIRE GAUGE	STRANDS	QUALIFICATION
20	10	UL 1015
18	16	UL 1015
16	26	UL 1015
14	41	UL 1015
12	65	UL 1015
10	105	UL 1015
8	133 OR 49	UL 1231
6	19	UL 1283/1232

********** END OF REV. A.2 **********

REV	SHT	REVISION RECORD	DATE	BY	CHK	APP	AUTH NO.
A	1	TERMINAL NUMBER 60 WAS 'AMP 66025-2'TERMINAL NUMBER 04 WAS REPLACED BY 02	2/14/23	TBH			1164323

DRAWING NUMBER: 40RU000670 --- RELEASE LEVEL: Under Review

ITC CLASSIFICATION
U.S. ECCN: EAR99

MATERIAL
-
-
-

ENGINEERING REQUIREMENTS
T-005,Y-002

MFG LOCATION
-

WEIGHT
-

THIRD ANGLE PROJECTION

UNLESS OTHERWISE SPECIFIED DIMENSIONS ARE IN INCHES TOLERANCES ON:

1 DEC	2 DEC	3 DEC	ANG°
±0.5	±0.25	±-	±-°

NEXT DRAWING
-

CAD MODEL
40RU000670 A.2

Carrier

THIS DOCUMENT AND THE INFORMATION CONTAINED THEREIN IS PROPRIETARY TO CARRIER CORPORATION AND SHALL NOT BE USED OR DISCLOSED TO OTHERS, IN WHOLE OR IN PART, WITHOUT THE WRITTEN AUTHORIZATION OF CARRIER CORPORATION.

TITLE
HARNESS ASSY
IFM 3PH

DRAWING RELEASE LEVEL
Under Review

SIZE	DRAWING NUMBER	REV	ITR
D	40RU000670 SHEET 1 OF 1	A	2

UNCONTROLLED WHEN PRINTED