HARNESS NAME/DESCRIPTION	WIRE NUMBER	COLOR	FROM/CONNECTION TYPE			TO/CONNECTION TYPE			LENGTH	WIRE GAUGE
			FROM/CONNECTION TYPE	TERMINAL NUMBER	END MARKING	TO	TERMINAL NUMBER	END MARKING		
CONTROLS SIGNALS TO CONDENSER	2	RED	IDCB-R	50	IDCB-R	UCB MAIN-1	211	UCB MAIN-1	19.0	20
	3	BLK	UCB MAIN-4	211	UCB MAIN-4	UCB MAIN-5	211	UCB MAIN-5	4.0	20
	4	BRN	IDCB-C	50	IDCB-C	UCB MAIN-10	211	UCB MAIN-10	19.0	20
	8	RED	UCB MAIN-7	211	UCB MAIN-7	PL12-1	212	PL12-1	11.0	20
	10	PNK	UCB MAIN-2	211	UCB MAIN-2	IDCB-W2	50	IDCB-W2	19.0	20
	11	ORN	UCB MAIN-3	211	UCB MAIN-3	IDCB-W1	50	IDCB-W1	19.0	20
	14	RED	PL12-2	212	PL12-2	UCB MAIN-8	50	UCB MAIN-8	11.0	18
	50	BLU	UCB COMP-3	211	UCB COMP-3	IDCB-Y1	50	IDCB-Y1	14.0	18
	54	ORN	UCB COMP-1	211	UCB COMP-1	IDCB-Y2	50	IDCB-Y2	14.0	18

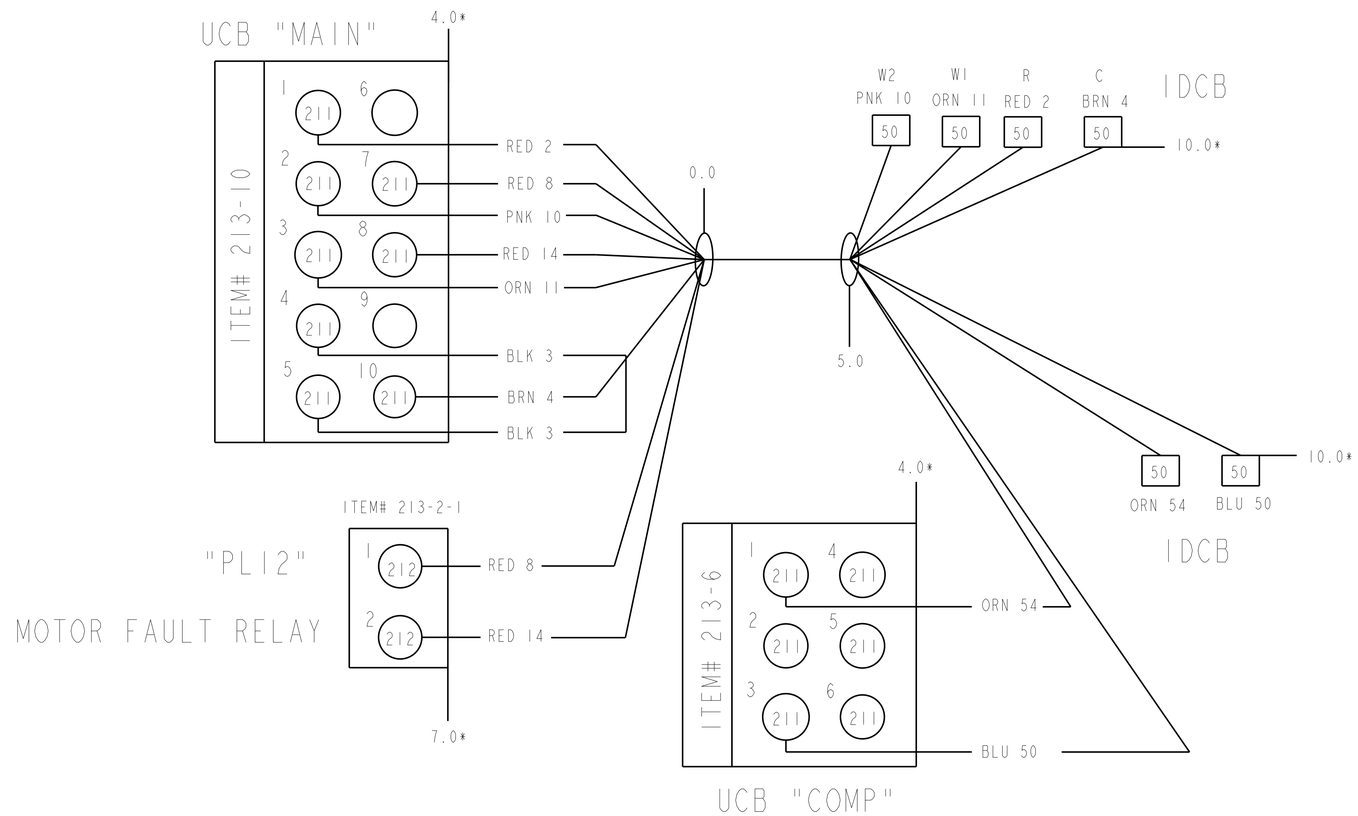

ITEM NUMBERS		
TERMINAL NUMBER	MFG. P/N	DESCRIPTION
40	AMP 520988-2	ULTRAPOD FEMALE 0.25 QC
50	AMP 520963-2	ULTRAPOD FEMALE 0.25 QC
160	PANDUIT PLT-1.5I	STANDARD WIRE TIE
211	AMP 770988-1	AMP MINI-MATE N LOK SOCKET
212	AMP 770987-1	AMP MINI-MATE N LOK PIN
213-6	AMP 172168-1	6 POS MINI MATE N' LOCK PLUG
213-10	AMP 770580-1	10 POS MINI MATE N' LOCK PLUG
213-2-1	AMP 172233-1	2 POS MINI MATE N' LOCK CAP

NOTES:
1. * DENOTES MEASUREMENT FROM PREVIOUS WIRE TIE.
2. 0 = WIRE TIE TO BE ITEM 160 OF QTY 2.
3. ALL LENGTH IN INCHES
4. LENGTHS ARE CUT LENGTHS OF WIRES.
5. WIRE TO BE UL & CSA LABELLED.
6. WIRE MUST HAVE INSULATION RATING OF 600V & 105°C
7. END MARKING TO BE INKJET OR HOT STAMP OR WRAP AROUND LABELS PER WIRE LIST CHART.
8. NO FLAGS FOR WIRE MARKING.
9. STRIP TERMINAL WIRES TO MANUFACTURING SPECIFICATION.
10. LABEL ALL PLUGS WITH TEXT MARKED WITH QUOTES
11. IDENTICAL TERMINALS ON REEL CAN BE SUBSTITUTED FOR LOOSE PIECE.
12. USE IPC-620 REQUIREMENTS FOR WIRE TOLERANCES OTHERWISE SPECIFIED.

WIRE GAUGE	STRANDS	QUALIFICATION
20	10	UL 1015
18	16	UL 1015
16	26	UL 1015
14	41	UL 1015
12	65	UL 1015
10	105	UL 1015
8	133 OR 49	UL 1231
6	19	UL 1283/1232

********** END OF REV. A.4 **********

REV	SHT	REVISION RECORD	DATE	BY	CHK	APP	AUTH NO.
A	1	ALL MENTION OF IDCB WAS TB2; ALL MENTION OF R WAS 24VAC; TO/END MARKING IS UPDATED FOR WIRE 10 & 11	10/09/22	PT-H	-	-	1157670

DRAWING NUMBER: 40RU000495 --- RELEASE LEVEL: Under Review

ITC CLASSIFICATION
U.S. ECCN: EAR99

MATERIAL
-
-
-

ENGINEERING REQUIREMENTS
T-005, Y-002

MFG LOCATION
-

WEIGHT
-

THIRD ANGLE PROJECTION

UNLESS OTHERWISE SPECIFIED DIMENSIONS ARE IN INCHES TOLERANCES ON:

1 DEC	2 DEC	3 DEC	ANG°
±0.5	±0.25	±-	±-°

NEXT DRAWING
-

CAD MODEL
40RU000495 A.3

Carrier

THIS DOCUMENT AND THE INFORMATION CONTAINED THEREIN IS PROPRIETARY TO CARRIER CORPORATION AND SHALL NOT BE USED OR DISCLOSED TO OTHERS, IN WHOLE OR IN PART, WITHOUT THE WRITTEN AUTHORIZATION OF CARRIER CORPORATION.

TITLE
HARNESS ASSY
UCB MAIN 40RU

DRAWING RELEASE LEVEL
Under Review

SIZE	DRAWING NUMBER	REV	ITR
D	40RU000495 SHEET 1 OF 1	A	4

UNCONTROLLED WHEN PRINTED