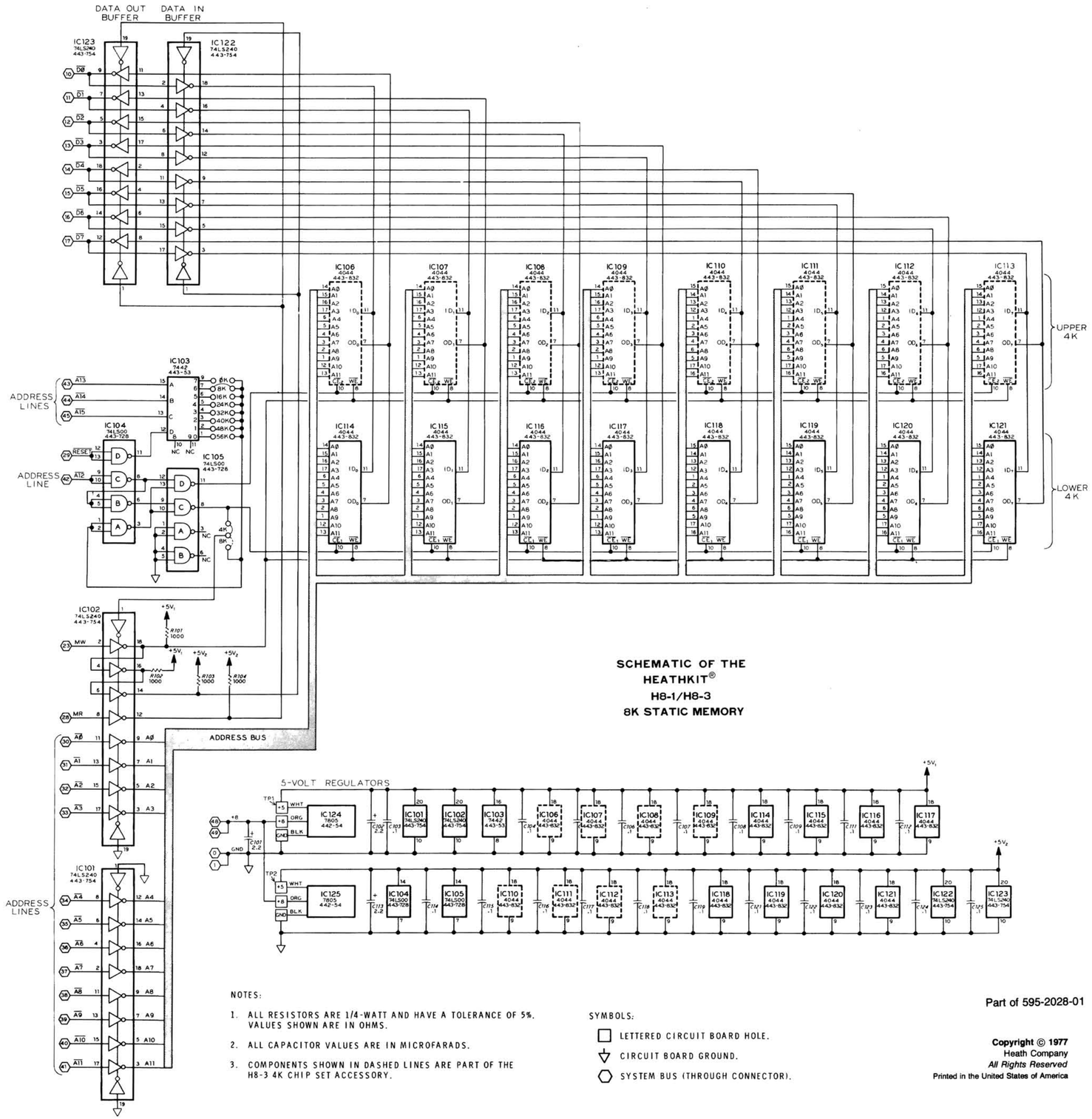

SCHEMATIC OF THE HEATHKIT® H8-1/H8-3 8K STATIC MEMORY

NOTES:

1. ALL RESISTORS ARE 1/4-WATT AND HAVE A TOLERANCE OF 5%. VALUES SHOWN ARE IN OHMS.
2. ALL CAPACITOR VALUES ARE IN MICROFARADS.
3. COMPONENTS SHOWN IN DASHED LINES ARE PART OF THE H8-3 4K CHIP SET ACCESSORY.

SYMBOLS:

- LETTERED CIRCUIT BOARD HOLE.
- CIRCUIT BOARD GROUND.
- SYSTEM BUS (THROUGH CONNECTOR).

Part of 595-2028-01

Copyright © 1977
Heath Company
All Rights Reserved
Printed in the United States of America