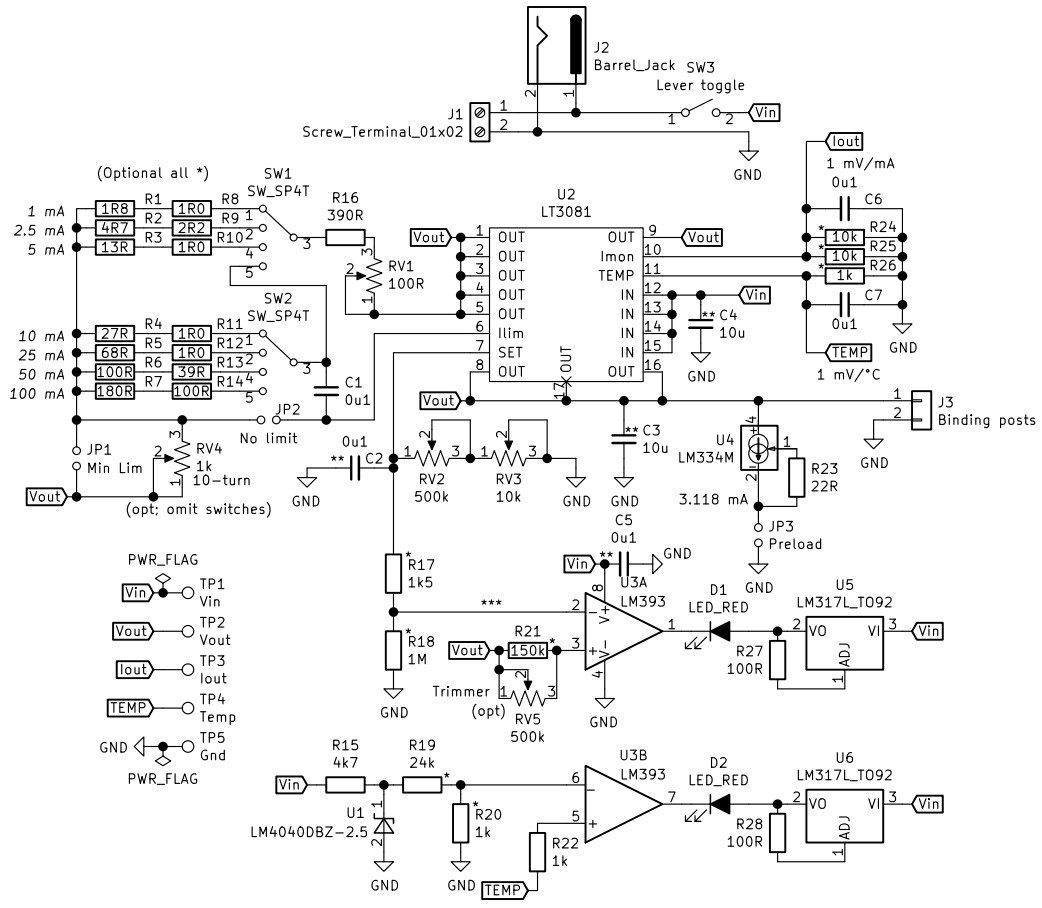

* 1% tolerance or better. 5–10% otherwise.

** Ceramic X5R or X7R.

*** The combination of the divider on V− and the voltage increase into V+ due to input bias current should provide adequate offset over the full range of Vin so that the output of the comparator is stable, but does not false-trigger due to Vout regulation tolerance.

Sheet: /
File: psu.sch

Title: Simple Lab Power Supply

Size: A4	Date: 2019-06-01	**Rev:** A
KiCad E.D.A. kicad (5.1.2)-1		Id: 1/1