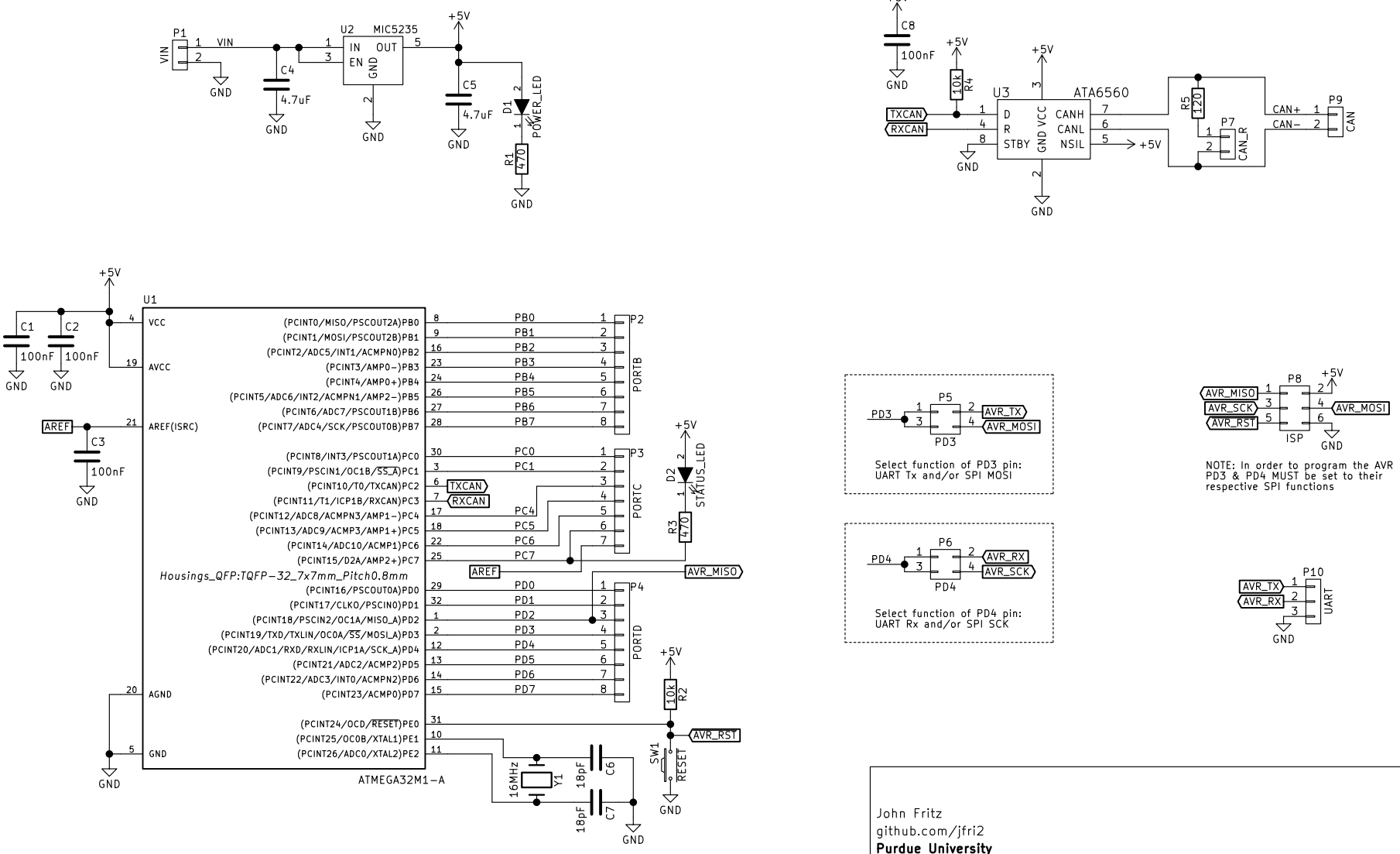

Select function of PD3 pin:
UART Tx and/or SPI MOSI

Select function of PD4 pin:
UART Rx and/or SPI SCK

NOTE: In order to program the AVR PD3 & PD4 MUST be set to their respective SPI functions

John Fritz
github.com/jfri2
Purdue University

Sheet: /
File: ATmegaXXM1_Breakout.sch

Title: ATmegaXXM1 CAN Breakout

Size: A4	Date: 2016-10-07	**Rev: 1.0**
KiCad E.D.A. kicad 4.0.3-stable		Id: 1/1