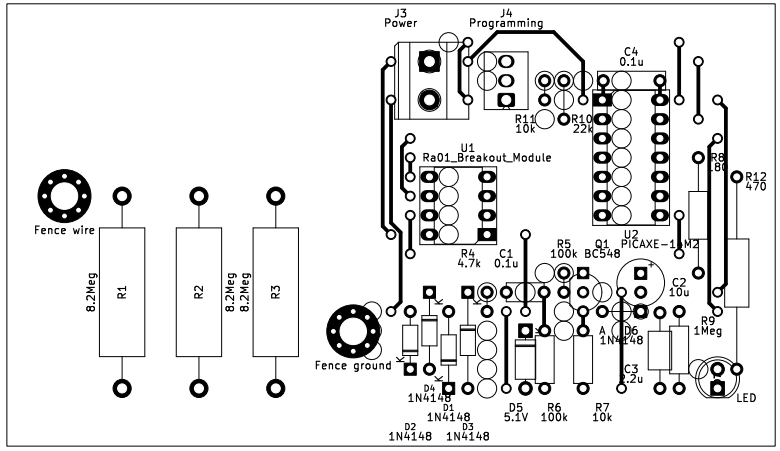
J3
Power
J4
Programming
C4
0.1u
R11
10k
R10
22k
U1
Ra01_Breakout_Module
R8
68
R12
470
Fence wire
8.2Meg
R1
R2
8.2Meg
8.2Meg
R3
R4
4.7k
C1
0.1u
R5
100k
Q1
BC548
U2
PICAXE-14M2
C2
10u
R9
1Meg
Fence ground
D4
1N4148
D1
1N4148
D2
1N4148
D3
1N4148
D5
5.1V
R6
100k
R7
10k
D6
1N4148
C3
2.2u
LED

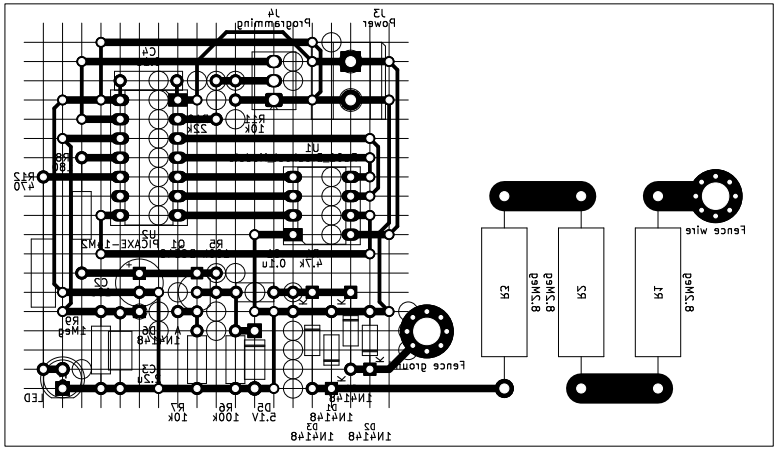

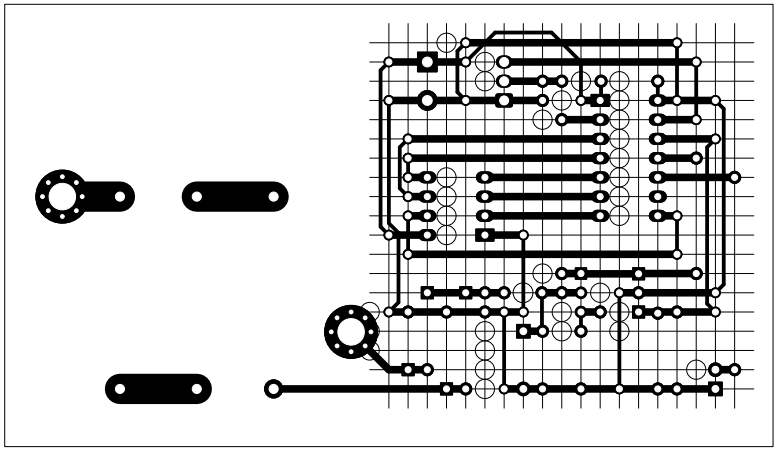

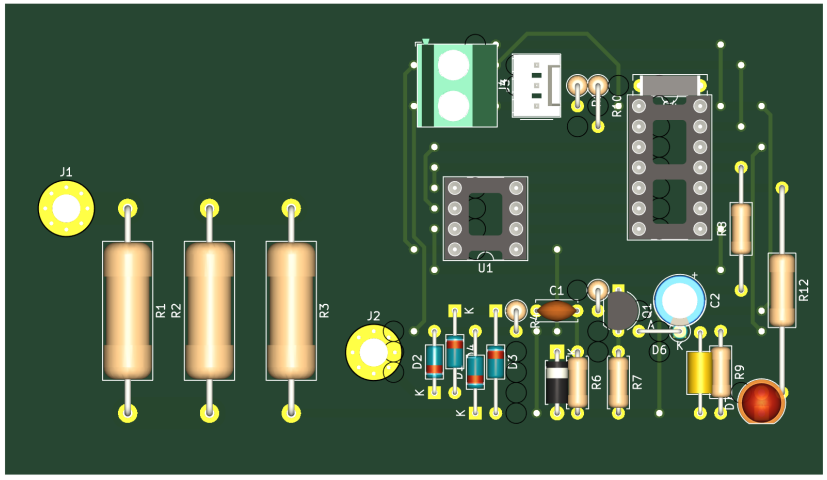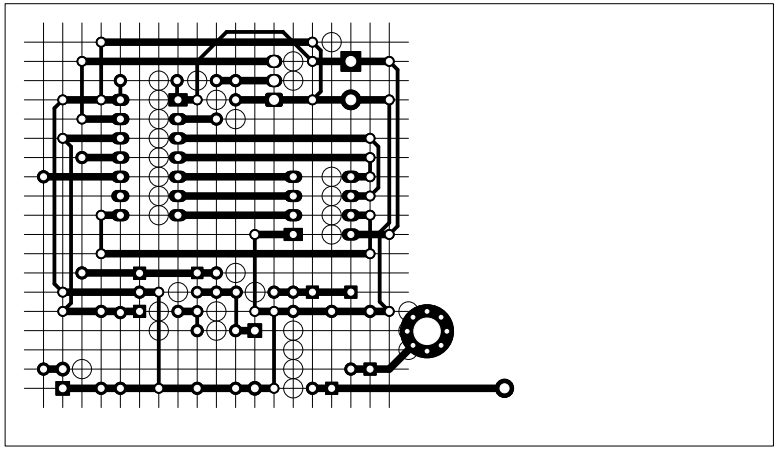
J1
R1
R2
R3
J2
J5
R4
R5
U1
C1
C2
D2
D1
D3
D6
R6
R7
R8
R9
R12