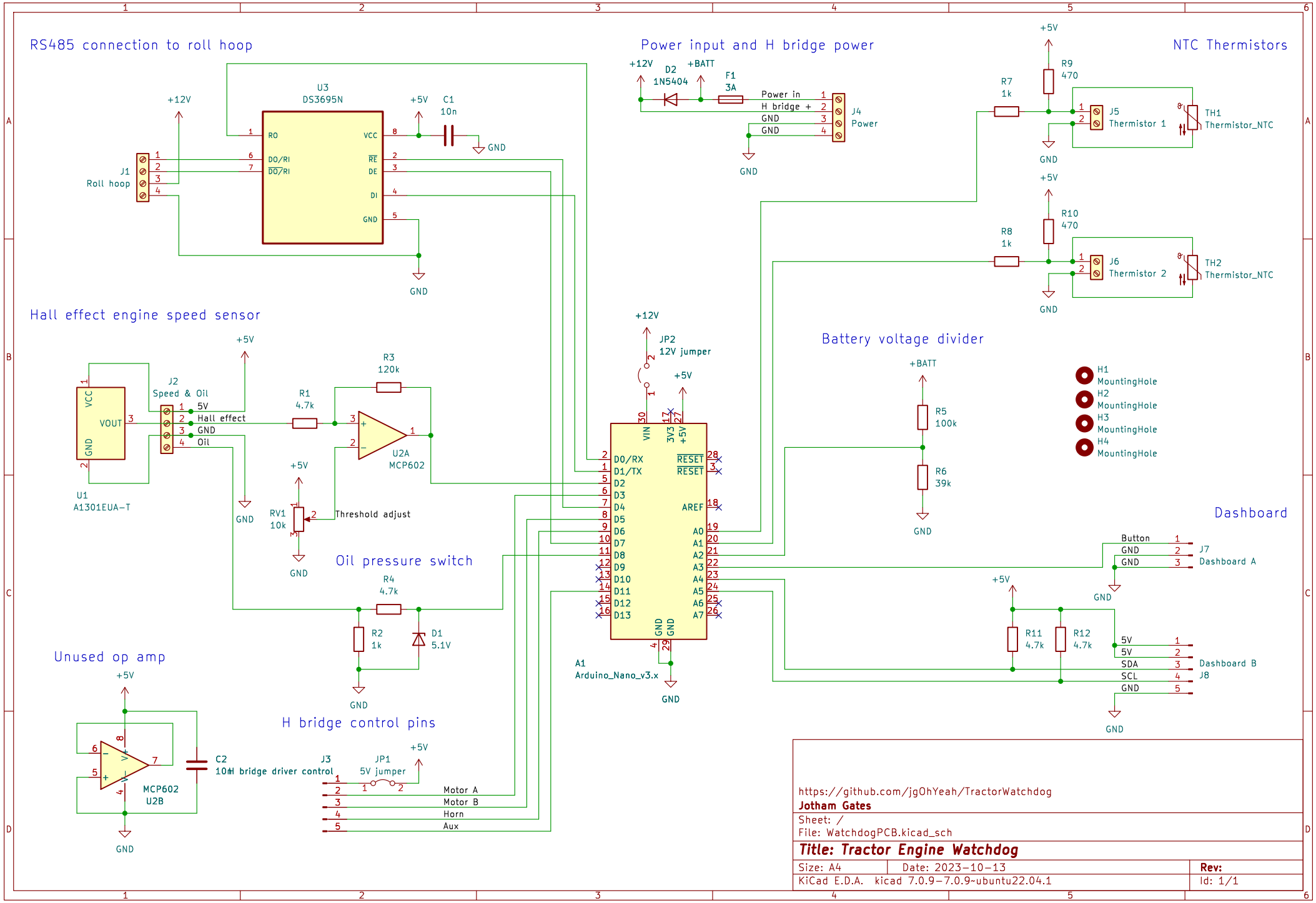
RS485 connection to roll hoop
U3
DS3695N
RO
DO/RI
DO/RI
VCC
RE
DE
DI
GND
+12V
+5V
C1
10n
GND
J1
Roll hoop
Power input and H bridge power
+12V
D2
1N5404
+BATT
F1
3A
Power in
H bridge +
GND
GND
J4
Power
NTC Thermistors
+5V
R9
470
R7
1k
J5
Thermistor 1
TH1
Thermistor_NTC
R10
470
R8
1k
J6
Thermistor 2
TH2
Thermistor_NTC
Hall effect engine speed sensor
J2
Speed & Oil
5V
Hall effect
GND
Oil
VCC
VOUT
GND
U1
A1301EUA-T
R1
4.7k
R3
120k
U2A
MCP602
RV1
10k
Threshold adjust
JP2
12V jumper
Battery voltage divider
+BATT
R5
100k
R6
39k
H1
MountingHole
H2
MountingHole
H3
MountingHole
H4
MountingHole
Oil pressure switch
R4
4.7k
R2
1k
D1
5.1V
A1
Arduino_Nano_v3.x
VIN
3V3
+5V
D0/RX
D1/TX
D2
D3
D4
D5
D6
D7
D8
D9
D10
D11
D12
D13
RESET
RESET
AREF
A0
A1
A2
A3
A4
A5
A6
A7
Dashboard
Button
GND
GND
J7
Dashboard A
R11
4.7k
R12
4.7k
5V
5V
SDA
SCL
GND
Dashboard B
J8
Unused op amp
MCP602
U2B
C2
10n
H bridge driver control
H bridge control pins
J3
JP1
5V jumper
Motor A
Motor B
Horn
Aux
https://github.com/jgOhYeah/TractorWatchdog
Jotham Gates
Sheet: /
File: WatchdogPCB.kicad_sch
Title: Tractor Engine Watchdog
Size: A4
Date: 2023-10-13
Rev:
KiCad E.D.A. kicad 7.0.9-7.0.9~ubuntu22.04.1
Id: 1/1