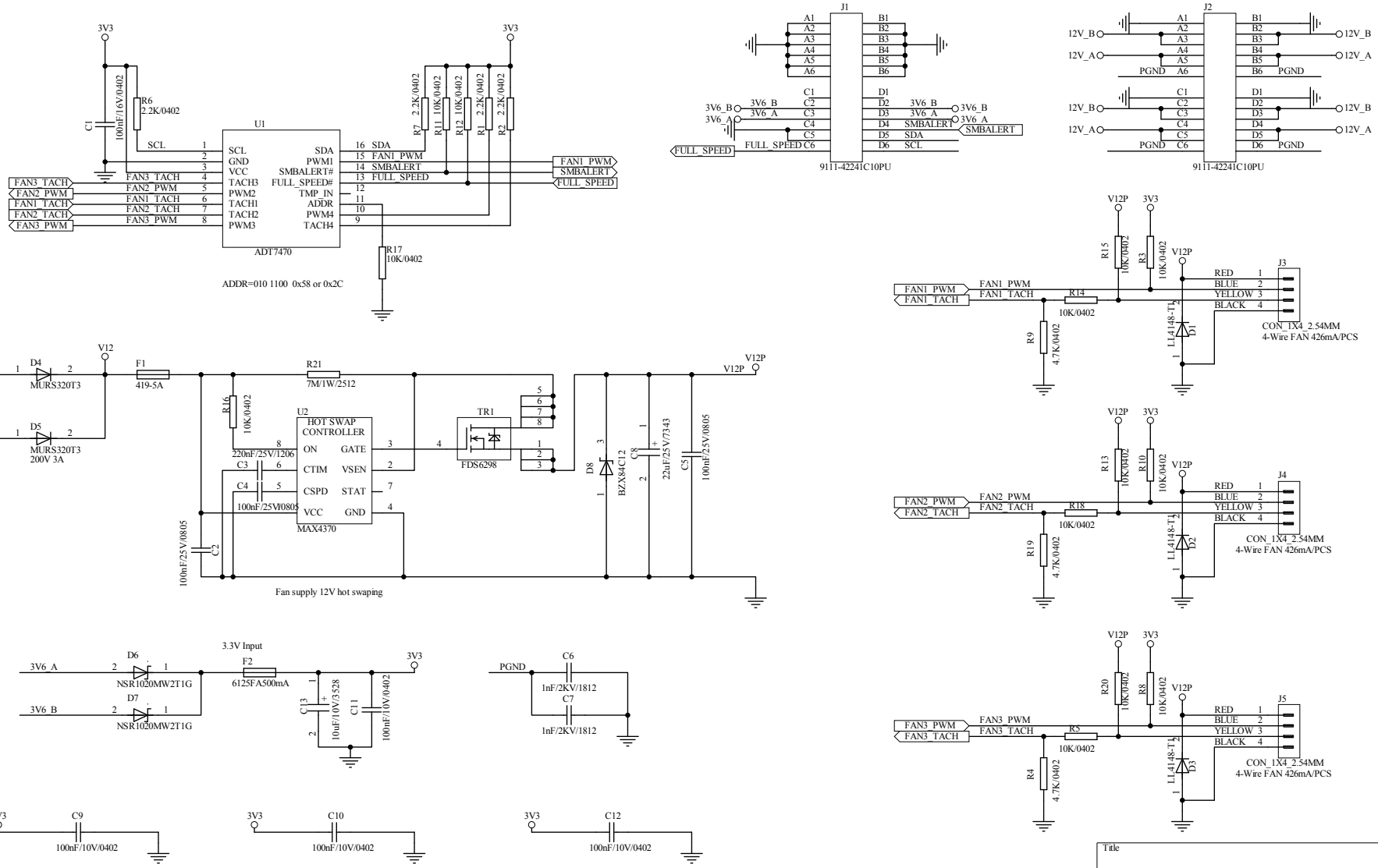

Title		
Size B	Number	Revision
Date: 21-Apr-2016	Sheet of	
File: D:\马兰的文件\my design work\fan\FAN.DDB	Drawn By:	