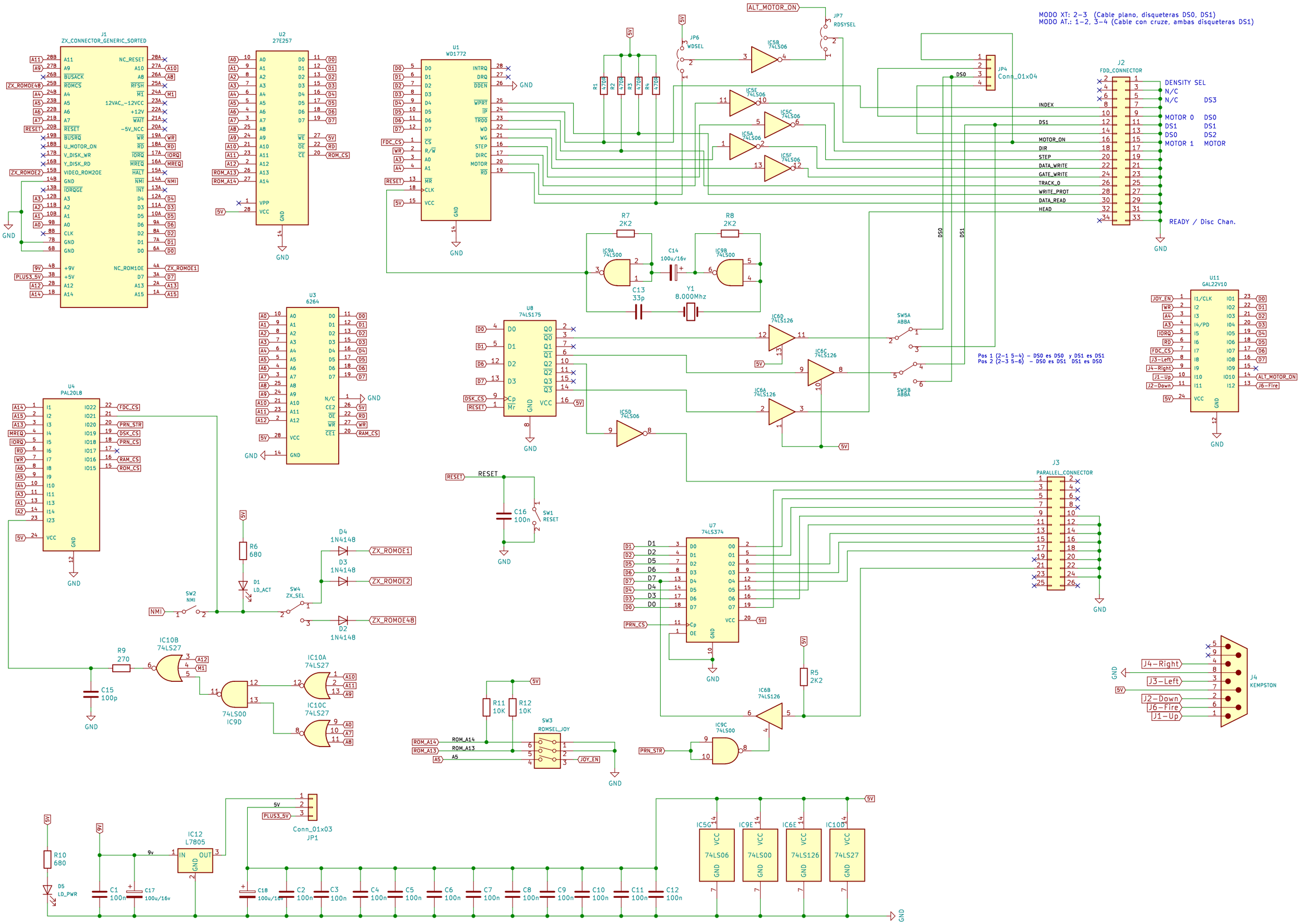
MODO XT: 2-3 (Cable plano, disqueteras DS0, DS1)
MODO AT.: 1-2, 3-4 (Cable con cruze, ambas disqueteras DS1)
J1
ZX_CONNECTOR_GENERIC_SORTED
U2
27E257
U1
WD1772
U3
6264
U4
PAL20L8
U8
74LS175
U7
74LS374
U11
GAL22V10
J2
FDD_CONNECTOR
J3
PARALLEL_CONNECTOR
J4
KEMPSTON
JP4
Conn_01x04
JP1
Conn_01x03
IC12
L7805
SW1
RESET
SW2
NMI
SW3
ROMSEL_JOY
SW4
ZX_SEL
SW5A
ABBA
SW5B
ABBA
JP6
WDSEL
JP7
RDSYSEL
Y1
8.000Mhz
Pos 1 (2-1 5-4) - DS0 es DS0 y DS1 es DS1
Pos 2 (2-3 5-6) - DS0 es DS1 DS1 es DS0
DENSITY SEL
N/C
N/C DS3
MOTOR 0 DS0
DS1 DS1
DS0 DS2
MOTOR 1 MOTOR
READY / Disc Chan.
INDEX
DS1
MOTOR_ON
DIR
STEP
DATA_WRITE
GATE_WRITE
TRACK_0
WRITE_PROT
DATA_READ
HEAD
GND
5V