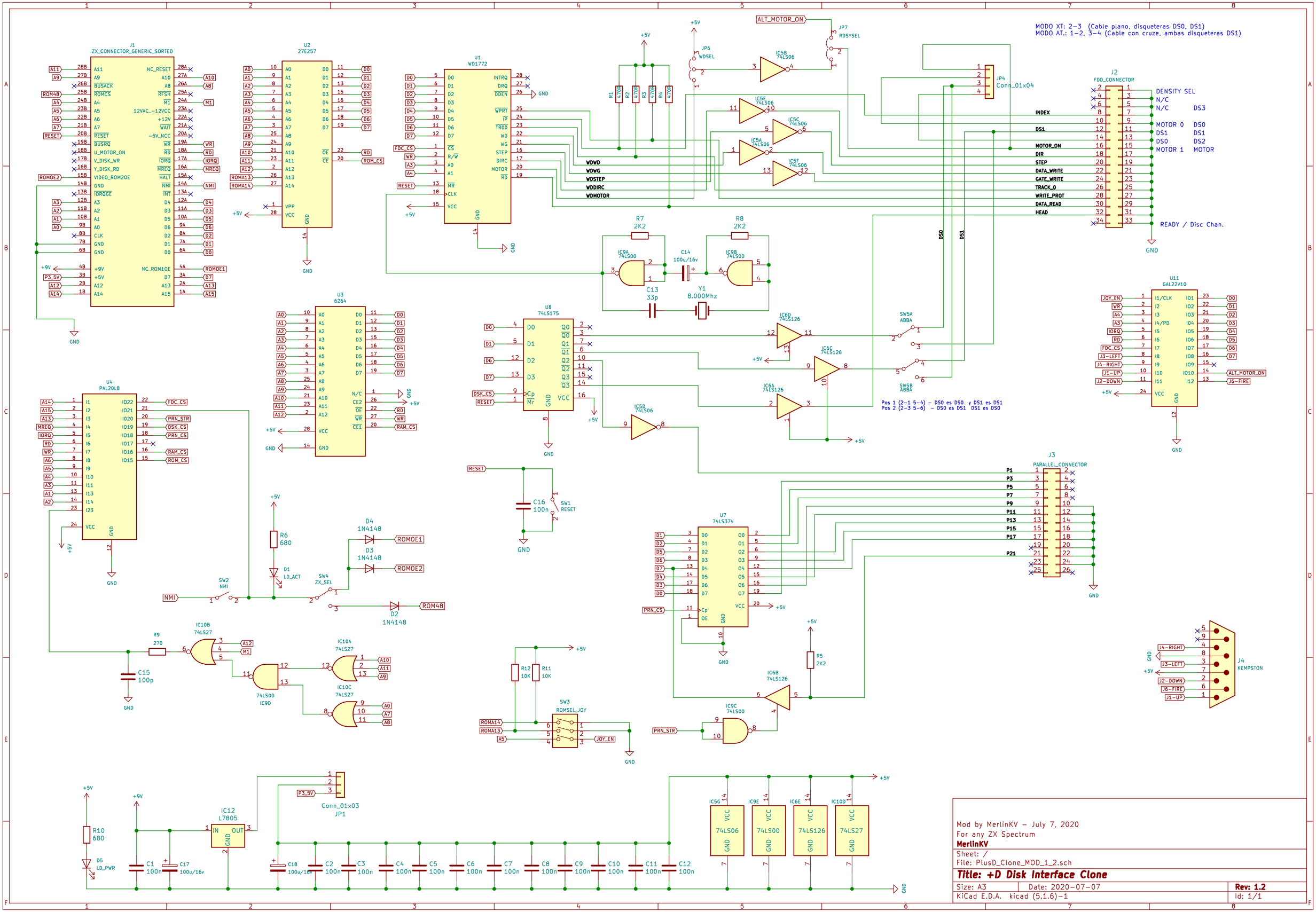
MODO XT: 2-3 (Cable plano, disqueteras DS0, DS1)
MODO AT.: 1-2, 3-4 (Cable con cruze, ambas disqueteras DS1)
J1
ZX_CONNECTOR_GENERIC_SORTED
U2
27E257
U1
WD1772
J2
FDD_CONNECTOR
DENSITY SEL
N/C
N/C DS3
MOTOR 0 DS0
DS1 DS1
DS0 DS2
MOTOR 1 MOTOR
READY / Disc Chan.
INDEX
DS1
MOTOR_ON
DIR
STEP
DATA_WRITE
GATE_WRITE
TRACK_0
WRITE_PROT
DATA_READ
HEAD
WDWD
WDWG
WDSTEP
WDDIRC
WDMOTOR
ALT_MOTOR_ON
JP7
RDSYSEL
JP6
WDSEL
JP4
Conn_01x04
IC5B 74LS06
IC5E 74LS06
IC5C 74LS06
IC5A 74LS06
IC5F 74LS06
R1 4700
R2 4700
R3 4700
R4 4700
R7 2K2
R8 2K2
IC9A 74LS00
IC9B 74LS00
C14 100u/16v
C13 33p
Y1 8.000Mhz
U11
GAL22V10
U3
6264
U8
74LS175
IC6D 74LS126
IC6C 74LS126
IC6A 74LS126
IC5D 74LS06
SW5A ABBA
SW5B ABBA
Pos 1 (2-1 5-4) - DS0 es DS0 y DS1 es DS1
Pos 2 (2-3 5-6) - DS0 es DS1 DS1 es DS0
U4
PAL20L8
J3
PARALLEL_CONNECTOR
U7
74LS374
C16 100n
SW1 RESET
R6 680
D1 LD_ACT
D4 1N4148
D3 1N4148
D2 1N4148
SW2 NMI
SW4 ZX_SEL
R9 270
IC10B 74LS27
IC10A 74LS27
IC10C 74LS27
IC9D 74LS00
C15 100p
R12 10K
R11 10K
SW3 ROMSEL_JOY
R5 2K2
IC6B 74LS126
IC9C 74LS00
J4 KEMPSTON
R10 680
D5 LD_PWR
IC12 L7805
Conn_01x03 JP1
C1 100n
C17 100u/16v
C18 100u/16v
C2 100n
C3 100n
C4 100n
C5 100n
C6 100n
C7 100n
C8 100n
C9 100n
C10 100n
C11 100n
C12 100n
IC5G 74LS06
IC9E 74LS00
IC6E 74LS126
IC10D 74LS27
Mod by MerlinKV - July 7, 2020
For any ZX Spectrum
MerlinKV
Sheet: /
File: PlusD_Clone_MOD_1_2.sch
Title: +D Disk Interface Clone
Size: A3
Date: 2020-07-07
Rev: 1.2
KiCad E.D.A. kicad (5.1.6)-1
Id: 1/1