2선재 고속 모니터링 시스템용

고속카메라

High-Speed Camera

Model : G5-052 / Allied Vision

Interface	**5GigE Vision**
Resolution	**816(H) × 624(V)**
Sensor	**Sony IMX426 (CMOS)**
Pixel Size	**9µm × 9µm**
Max Frame Rate	**687 fps @ 525MB/s, Mono8**
Operating Temp.	**+5°C to +60°C (housing)**
Power	**12 VDC**
Dimensions	**60 × 29 × 29 mm (L×W×H)**

OPTIONS

렌즈 (with Controller) | 조명 (with Controller)

Order & SW Support : VisionST

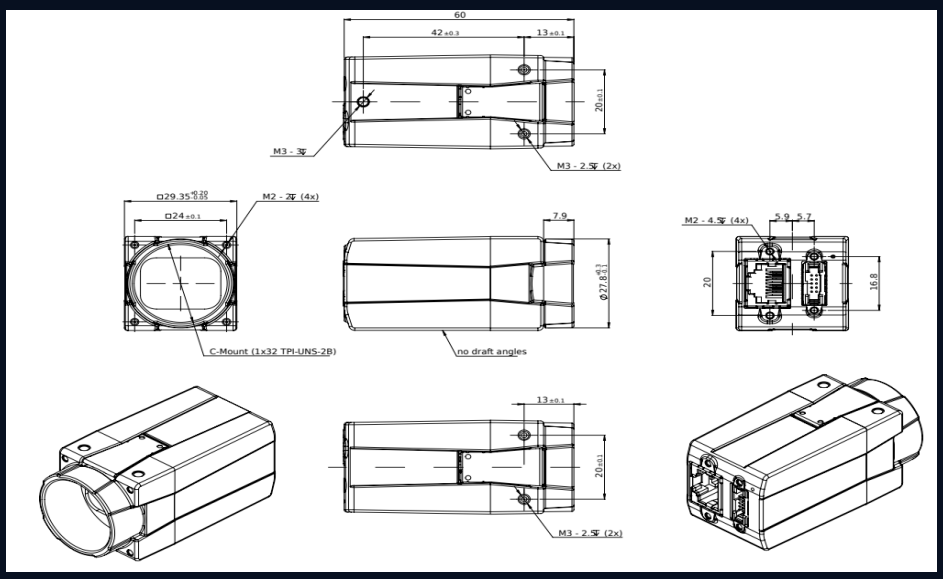

DIMENSION