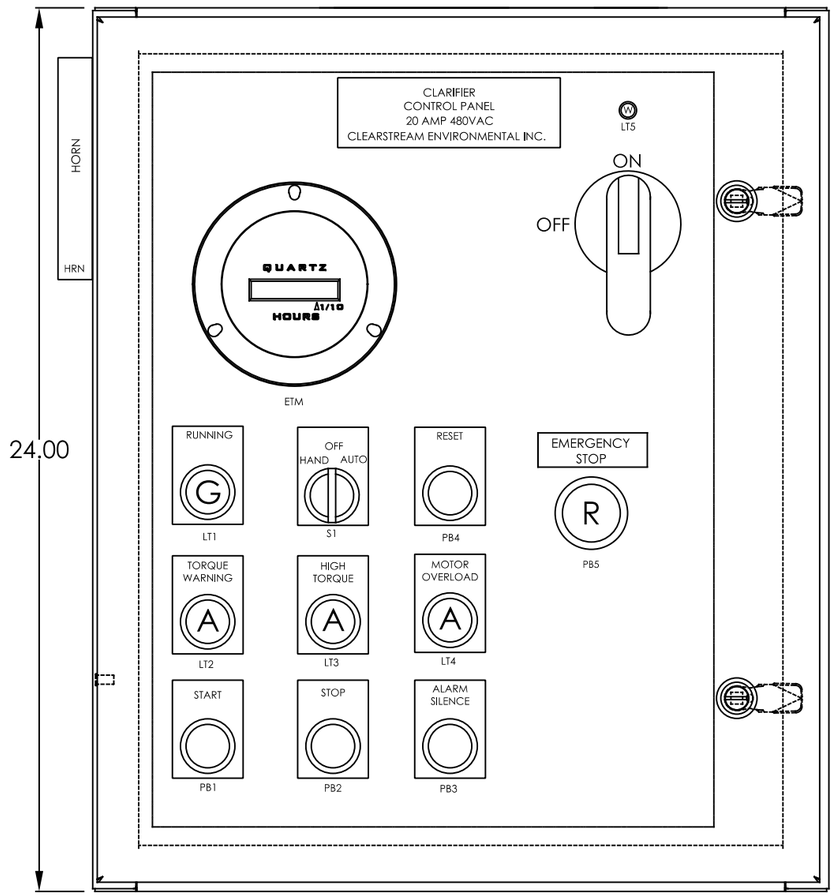

24" X 20" X 10" 304SS NEMA 4X ENCLOSURE

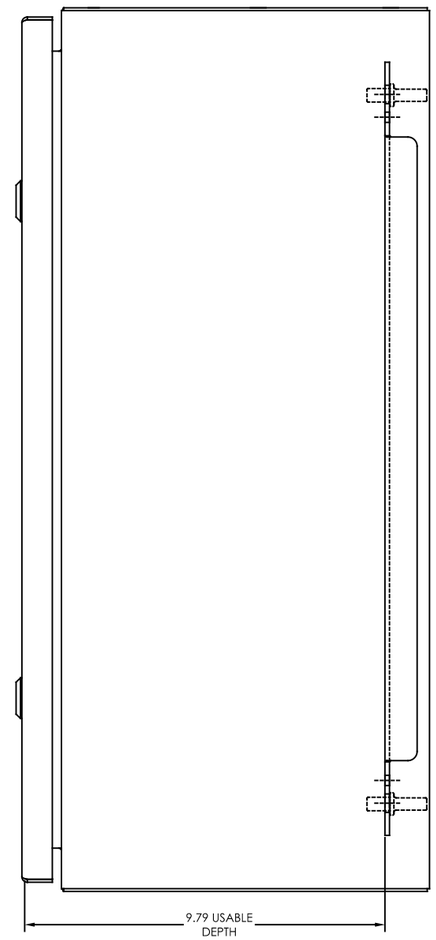

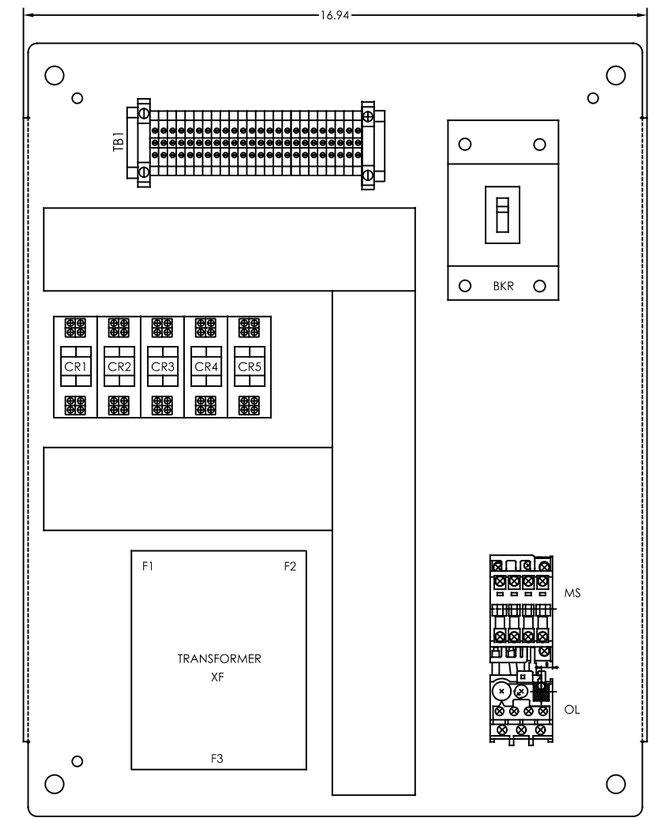

BACKPANEL

NOTES:
1) NAME PLATES TO BE LAMINATED PLASTIC, BLACK FACE ENGRAVED TO WHITE, TITLE PLATE TO HAVE ¼" LETTER HEIGHT, OTHERS 1/8" LETTERING

2)ALL INTERNAL COMPONENTS SHALL BE MACHINE PRINTED LABELED ON THE BACKPANEL

3)UL 508 OR ETL LISTED

REV.	DESCRIPTION	DRAWN	APPROV.	DATE
0	INITIAL RELEASE	MRL	---	9/22

ClearStream Environmental
TREATMENT EQUIPMENT SPECIALIST
9090 S 300 W
SANDY, UT 84070
OFFICE: (801) 676-1890
FAX: (801) 676-1893

PROPRIETARY AND CONFIDENTIAL
THE INFORMATION CONTAINED IN THIS DRAWING IS THE SOLE PROPERTY OF CLEARSTREAM ENVIRONMENTAL. ANY REPRODUCTION IN PART OR AS A WHOLE WITHOUT THE WRITTEN PERMISSION OF CLEARSTREAM ENVIRONMENTAL IS PROHIBITED.

INSPECTION CHECKLIST TABLE
- ☐ CONFIGURATION
- ☐ LABELS AND PLATES
- ☐ LAYOUT
- ☐ WARNING LABELS
- ☐ UL LISTING
- ☐ NOTES

INSPECTOR: _____

	NAME	DATE
DRAWN	MRL	9/22
CHECKED	---	9/22
ENG APPR.	---	---
FAB INSP.		

DO NOT SCALE DRAWING

MODEL NUMBER: XXXXXX

DESIGNATION: XXXXXX

CONTROL PANEL LAYOUT

ABBEVILLE WWTP

SIZE	DWG. / PART NO.	REV
B	CP.120	0

SCALE: 1:1 | SHEET 1 OF 2

REV 0
B 25-037

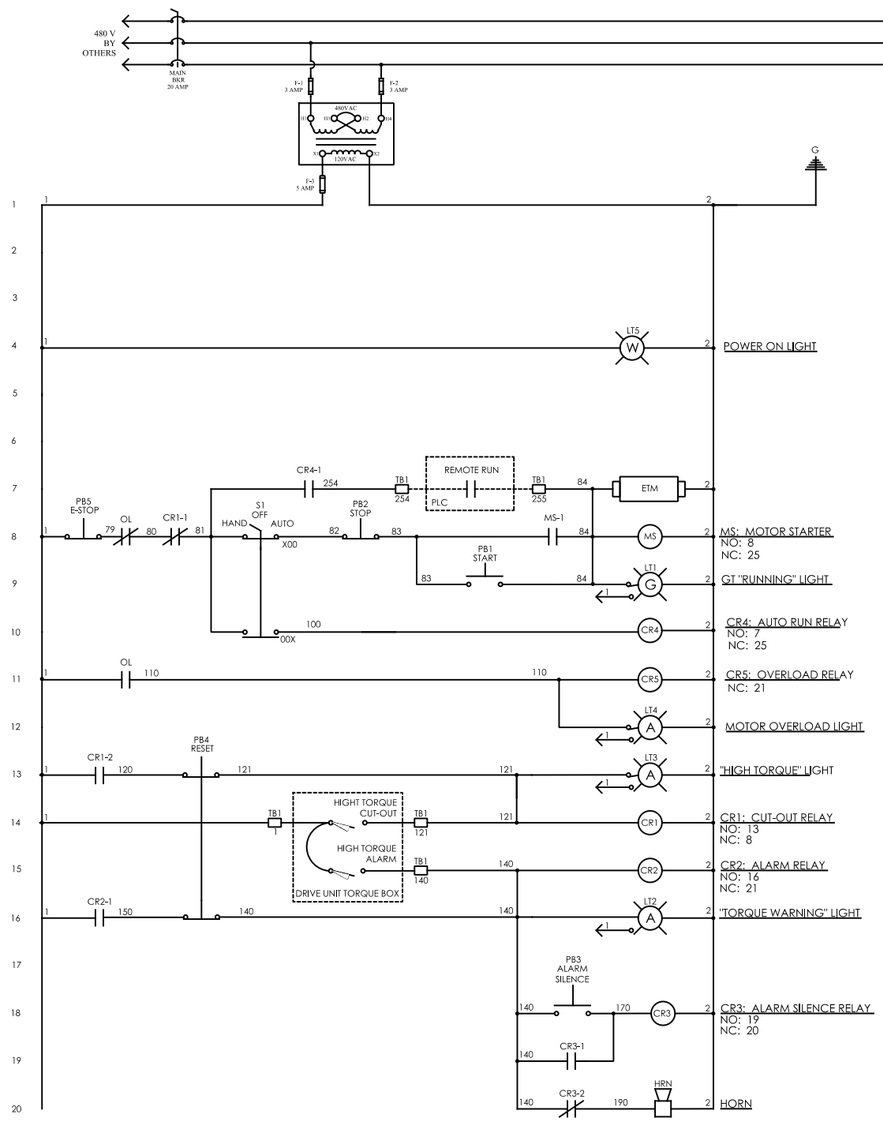

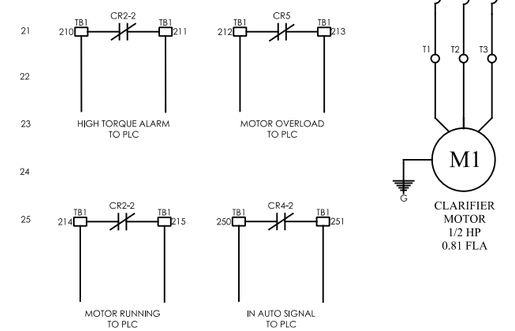

ITEM	QTY	TAG	MFG/PART NO.	DESCRIPTION
1	1	-	SAGINAW SCE-24EL2010SSLP	304 SS, NEMA 4X, 24X20X10 ENCLOSURE
2	1	-	SAGINAW 24P20	304 SS BACK PANEL
3	1	LT1	ALD2QH211DNUG	LED INDICATING LIGHT GREEN PRESS TO TEST
4	3	LT2, LT3, LT4	ALD2QH211DNUA	LED INDICATING LIGHT AMBER PRESS TO TEST
5	2	PB1, PB3	IDEC ABD110NUB	START & ALARM SILENCE PUSH BUTTONS / N.O. / BLACK
6	1	PB2	IDEC ABD101NUB	STOP PUSH BUTTONS / N.C. / BLACK
7	1	PB4	IDEC ABD102NUB	RESET PUSH BUTTON / 2 N.C. / BLACK
8	5	CR1-CR5	IDEC RH2B-ULC-120V	120VAC DPDT RELAY
9	5	-	IDEC SH2B-05C	RELAY SOCKET
10	8	-	N/A	LEGEND PLATES
11	A/R	-	AB 1492-DR5	DIN RAIL
12	20	-	N/A	TERMINAL BLOCK
13	1	-	N/A	GROUNDING BLOCK
14	4	-	N/A	END BARRIER
15	2	-	N/A	END ANCHOR
16	A/R	-	N/A	WIRE WAY PANDUIT 2X2
17	1	-	GB5K	GROUND BAR
18	1	BKR	XT1NU3020AAA000XXX	20 AMP 3 PHASE BREAKER
19	1	HRN	FEDERAL 350B-120-30, K8435666A, TR	SIGNAL HORN WITH GASKET KIT
20	1	M1	ABB AF09-30-10-13, CA4-22M, TF42-1.0	MOTOR STARTER W/ 1 NO, AUX AND OVERLOAD
21	3	F1, F2	LITTLE FUSE KLDR003	FUSE-CLASS CC TIME DELAY 600V 3 AMP, 2 SPARE
22	3	F3	LITTLE FUSE FLM005	FUSE-SLO-BLO TYPE TIME DELAY 350VAC 5 AMP, 2 SPARE
23	1	-	ABB KXTBRHEBFP, OXP10X225, OHB65L10B	THROUGH DOOR SWITCH MECHANISM, SHAFT, HANDLE
24	1	XF	IMPERVITRAN B500BTZ13RBF	500 VA TRANSFORMER 460V TO 120V W/ FUSE BLOCKS
25	1	S1	IDEC ASD3L20NU	H.O.A 3 POSITION SELECTOR SWITCH
26	1	LT5	AP2M222-PW, AP2-0126D	LED PILOT LIGHT WHITE
27	1	PB5	IDEC AYW411-R-120V	E-STOP MUSHROOM PUSH BUTTON / N.C. / RED
28	1	ETM	TRUMETER 722-0004, 5003-011	ELAPSED TIME METER W/ DIAL
29	-	-		
30	-	-		

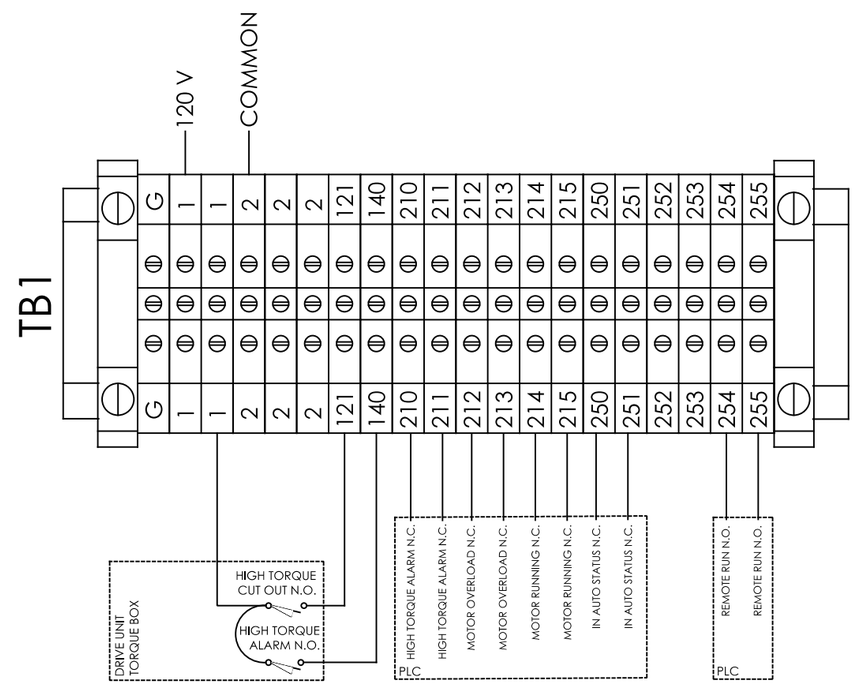

REV A
25-037
B

CONTROL PANEL WIRING LEGEND:

1) 120V CIRCUITS #14 AWG TEW
2) 480V CIRCUITS #14 AWG TEW
2) 4-20 ma CIRCUIT 18/2 SHIELDED
3) WIRE TAGGING: HEAT-SHRINK LABELS

LEGEND

PANEL TERMINAL	TB1	FUSE	
FIELD WIRE	----------	PRESSURE SWITCH	
LOCAL WIRE	————	DRIVE MOTOR	M1
PRESS TO TEST LIGHT	1 A	RELAY	CR1

ClearStream Environmental
TREATMENT EQUIPMENT SPECIALIST
9090 S 300 W
SANDY, UT 84070
OFFICE: (801) 676-1890
FAX: (801) 676-1893

PROPRIETARY AND CONFIDENTIAL
THE INFORMATION CONTAINED IN THIS DRAWING IS THE SOLE PROPERTY OF CLEARSTREAM ENVIRONMENTAL. ANY REPRODUCTION IN PART OR AS A WHOLE WITHOUT THE WRITTEN PERMISSION OF CLEARSTREAM ENVIRONMENTAL IS PROHIBITED.

INSPECTION CHECKLIST TABLE

- ☐ CONFIGURATION
- ☐ LABELS AND PLATES
- ☐ LAYOUT
- ☐ WARNING LABELS
- ☐ UL LISTING
- ☐ NOTES

INSPECTOR:

	NAME	DATE
DRAWN	MRL	9/22
CHECKED	---	9/22
ENG APPR.	---	---
FAB INSP.		

DO NOT SCALE DRAWING

MODEL NUMBER: TSGI.020

DESIGNATION: FW04.S3.MSWT

CONTROL PANEL

ABBEVILLE WWTP

SIZE	DWG. / PART NO.	REV
B	CP.120	A

SCALE: 1:1 | SHEET 2 OF 2