OVIVO™

Worldwide Experts in Water Treatment℠

B

LEMAY NO. 3 PUMP STATION, MO
BRACKET GREEN BOSKER
MAIN CONTROL PANEL

REVISION	EN/ECO	BY	CHECK'D	DATE	
UPDATED AS PER COMMENTS	027014	AB	MH	04/14/26	D
UPDATE AS PER COMMENTS	025220	SMM	JW	05/14/25	C
UPDATE AS PER COMMENTS	025058	SMM	HA	04/16/25	B
INITIAL RELEASE	024172	SMM	JG	10/18/24	A

D
SIZE SHEET
(DO NOT SCALE PRINTS)

THIRD ANGLE PROJECTION

DRAWN BY SMM
CHECKED BY JG
DATE mm/dd/yyyy 10/18/2024
PROJECT CSW1807-01
REF

© 2021 OVIVO.
ALL RIGHTS RESERVED.

WORKMANSHIP STANDARD ES0001 APPLIES

LEMAY NO. 3 PUMP STATION, MO
BRACKET GREEN BOSKER
MAIN CONTROL PANEL

OVIVO

THIS DRAWING CONTAINS CONFIDENTIAL PROPRIETARY INFORMATION OF OVIVO AND ITS AFFILIATES AND IS NOT TO BE DISCLOSED NOR TO BE USED EXCEPT FOR EVALUATING PROPOSALS OF OVIVO OR INSTALLING, OPERATING OR MAINTAINING OVIVO EQUIPMENT UNLESS OTHERWISE AUTHORIZED IN WRITING BY OVIVO. UNCONTROLLED COPY IF PRINTED.

DWG NO. CSW1807-121

REVISION D

CONSTRUCTION NOTES

CONTROL PANEL SPECIFICATIONS

1. **COMPONENTS SPECIFIC**

1.1 ENCLOSURE TO BE NEMA 12, 304 SS CONSTRUCTION.

1.2 ATTACH NAMEPLATES WITH MANUFACTURER'S RECOMMENDED ADHESIVE TO MAINTAIN NEMA STANDARD OF ENCLOSURE

1.3 CONTROL PANEL SHALL BE LABELED WITH SERIALIZED UL LABEL

1.4 PANEL WILL BE LABELED WITH IDENTIFICATION PLATE AS NOTED ON ENCLOSURE DRAWING.

1.5 ALL RELAY CONTACTS ARE RATED AT 10 AMPS UNLESS OTHERWISE NOTED.

1.6 COMPONENT IMAGES MAY NOT ACCURATELY REPRESENT THE ACTUAL DEVICE IN SOME INSTANCES. DIMENSIONS OF DEVICES, HOWEVER, WILL BE ACCURATE FOR PURPOSES OF LAYOUT AND SPACING.

1.7 SUBSTITUTIONS FOR COMPONENTS MAY BE PERMITTED UPON APPROVAL BY OVIVO ENGINEERS.

2. **WIRE SIZING & TYPE**

WIRE SIZING SHALL BE NO LESS THAN AS FOLLOWS (UNLESS OTHERWISE NOTED):

480 3 PHASE - 14 AWG TYPE: MTW

120 1 PHASE - 16 AWG TYPE: MTW

24 VDC - 16 AWG TYPE: MTW

3. **WIRE COLOR**

WIRE COLOR SHALL BE AS FOLLOWS:

POWER (480 VOLTS)

GREEN - GROUND

BLACK - ALL PHASES

CONTROL (120 VAC)

RED - LOAD WIRES FOR ALL LOCAL CONTROL CIRCUITS

WHITE - NEUTRAL FOR ALL LOCAL CONTROL CIRCUITS

YELLOW - FOREIGN POWER IN PANEL

WHITE W/ YELLOW STRIPE - NEUTRAL FOR FOREIGN POWER IN PANEL

CONTROL (24 VDC)

BLUE - LOAD WIRES FOR ALL LOCAL CONTROL CIRCUITS

WHITE W/BLUE STRIPE - COMMON FOR ALL LOCAL CONTROL CIRCUITS

4. **CONNECTIONS**

4.1 ALL CONNECTIONS SHALL BE POINT TO POINT WITHOUT SPLICES. EXCEPTIONS APPLY TO SOLENOIDS AND MOTORS AND FACTORY WIRED COMPONENTS.

4.2 ALL CONDUCTORS MUST BE MARKED WITH MACHINE PRINTED TAGS AT EACH TERMINATION. MARKERS SHALL BE OF HEAT SHRINK TYPE.

5. **DOCUMENTATION**

5.1 FABRICATOR SHALL PROVIDE ONE COPY OF ALL DOCUMENTS SUPPLIED WITH THE COMPONENTS SUPPLIED BY THE FABRICATOR. THIS INFORMATION INCLUDES BUT IS NOT LIMITED TO MANUFACTURERS SPECIFICATIONS, INSTALLATION MANUALS AND OPERATION MANUALS.

5.2 ANY OVIVO APPROVED CHANGES OR MARK-UPS TO THE SCHEMATICS, PANEL LAYOUTS AND ANY OTHER PERTAINING DOCUMENTS SHALL BE MAINTAINED AND DELIVERED TO OVIVO AT ACCEPTANCE OF THE PANEL.

6. **TESTING**

6.1 OVIVO ENGINEERS OR OVIVO APPROVED FABRICATOR, WILL PERFORM A POINT TO POINT CONTINUITY TEST ON THE PANEL.

6.2 WHEN APPLICABLE, THE FABRICATOR WILL ALSO PROVIDE POWER TO THE 480VAC OR 120VAC CIRCUITS WHERE APPLICABLE FOR VERIFICATION AND TESTING. FABRICATOR SHALL ALLOW A MINIMUM OF 2 HOURS OF ACCESS TO THE CONTROL PANEL BY ENGINEER FOR THIS AND PREVIOUSLY STATED TEST.

7. **WIRING CONNECTIONS**

7.1 INTERNAL PANEL WIRING

7.2 FIELD WIRING (NOT OVIVO SCOPE)

7.3 FIELD WIRING (PROVIDED BY OVIVO, INSTALLATION BY OTHERS)

7.4 COMMUNICATION

© 2020 OVIVO. ALL RIGHTS RESERVED.
WORKMANSHIP STANDARD ES0001 APPLIES
THIS DRAWING CONTAINS CONFIDENTIAL PROPRIETARY INFORMATION OF OVIVO AND ITS AFFILIATES AND IS NOT TO BE DISCLOSED NOR TO BE USED EXCEPT FOR EVALUATING PROPOSALS OF OVIVO OR INSTALLING, OPERATING OR MAINTAINING OVIVO EQUIPMENT UNLESS OTHERWISE AUTHORIZED IN WRITING BY OVIVO. UNCONTROLLED COPY IF PRINTED.

INTENTIONALLY LEFT BLANK

© 2020 OVIVO.
ALL RIGHTS RESERVED.
WORKMANSHIP STANDARD ISO9001 APPLIES

THIS DRAWING CONTAINS CONFIDENTIAL PROPRIETARY INFORMATION OF OVIVO AND ITS AFFILIATES AND IS NOT TO BE DISCLOSED NOR TO BE USED EXCEPT FOR EVALUATING PROPOSALS OF OVIVO OR INSTALLING, OPERATING OR MAINTAINING OVIVO EQUIPMENT UNLESS OTHERWISE AUTHORIZED IN WRITING BY OVIVO. UNCONTROLLED COPY IF PRINTED.

INTENTIONALLY LEFT BLANK

© 2020 OVIVO. ALL RIGHTS RESERVED.

THIS DRAWING CONTAINS CONFIDENTIAL PROPRIETARY INFORMATION OF OVIVO AND ITS AFFILIATES AND IS NOT TO BE DISCLOSED NOR TO BE USED EXCEPT FOR EVALUATING PROPOSALS OF OVIVO OR INSTALLING, OPERATING OR MAINTAINING OVIVO EQUIPMENT UNLESS OTHERWISE AUTHORIZED IN WRITING BY OVIVO. UNCONTROLLED COPY IF PRINTED.

NETWORK COMMUNICATION DIAGRAM

DEVICE NAME:	PLC1344
EQUIPMENT:	MAIN PLC
LOCATION:	**MAIN CONTROL PANEL**
TYPE:	PLC PROCESSOR
PART NUMBER:	5069-L330ERM
MANUFACTURER:	ALLEN BRADLEY
IP ADDRESS:	192.168.1.10
SUBNET ADDRESS:	255.255.255.0
GATEWAY ADDRESS:	-
SPEED: 100 MBPS	PORT 1
DUPLEX: FULL	
TYPE: COPPER	PORT 2

DEVICE NAME:	HMI1331
EQUIPMENT:	MAIN HMI
LOCATION:	**MAIN CONTROL PANEL**
TYPE:	HMI INTERFACE
PART NUMBER:	**2711P-T15C21D8S**
MANUFACTURER:	ALLEN BRADLEY
IP ADDRESS:	192.168.1.13
SUBNET ADDRESS:	255.255.255.0
GATEWAY ADDRESS:	-
SPEED: 100 MBPS	PORT 1
DUPLEX: FULL	
TYPE: COPPER	

DEVICE NAME:	VFD1140
EQUIPMENT:	**FRONT HOIST VFD**
LOCATION:	**MAIN CONTROL PANEL**
TYPE:	AC DRIVE
PART NUMBER:	25C-D017N114
MANUFACTURER:	ALLEN BRADLEY
IP ADDRESS:	192.168.1.30
SUBNET ADDRESS:	255.255.255.0
GATEWAY ADDRESS:	-
SPEED: 100 MBPS	PORT 1
DUPLEX: FULL	
TYPE: COPPER	

DEVICE NAME:	VFD1176
EQUIPMENT:	REAR HOIST VFD
LOCATION:	**MAIN CONTROL PANEL**
TYPE:	AC DRIVE
PART NUMBER:	25C-D017N114
MANUFACTURER:	ALLEN BRADLEY
IP ADDRESS:	192.168.1.31
SUBNET ADDRESS:	255.255.255.0
GATEWAY ADDRESS:	-
SPEED: 100 MBPS	PORT 1
DUPLEX: FULL	
TYPE: COPPER	

MAIN CONTROL PANEL

ETH1333 (20-PORT SWITCH)
IP: 192.168.1.20

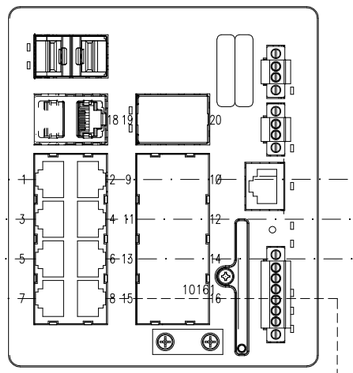

NON - VFD DATA CABLES
TO BE SHIELDED CAT 5E
300 VAC RATED(TYPICAL)

VFD DATA CABLES TO BE
SHIELDED CAT 5E 600 VAC
RATED (TYPICAL)

ENERGY CHAIN
ETHERNET CABLE
PROVIDED BY OVIVO,
INSTALLATION
BY OTHERS

RIO PANEL
REFER CSW1807-122

ETH2335
ETHERNET SWITCH

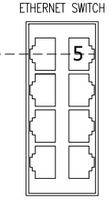

DEVICE NAME:	VFD1153
EQUIPMENT:	**TRAVERSE MOTOR**
LOCATION:	**MAIN CONTROL PANEL**
TYPE:	**AC DRIVE**
PART NUMBER:	25B-D010N114
MANUFACTURER:	ALLEN BRADLEY
IP ADDRESS:	192.168.1.32
SUBNET ADDRESS:	255.255.255.0
GATEWAY ADDRESS:	-
PORT 1	SPEED: 100 MBPS
	DUPLEX: FULL
	TYPE: COPPER

DEVICE NAME:	RECPT1263
EQUIPMENT:	RECEPTACLE
LOCATION:	**MAIN CONTROL PANEL**
TYPE:	**PROG. RECEPTACLE**
PART NUMBER:	P-R2-F2R0
MANUFACTURER:	GRACEPORT
IP ADDRESS:	-
SUBNET ADDRESS:	255.255.255.0
GATEWAY ADDRESS:	-
PORT 1	SPEED: 100 MBPS
	DUPLEX: FULL
	TYPE: COPPER

DEVICE NAME:	SPARE
EQUIPMENT:	
LOCATION:	
TYPE:	
PART NUMBER:	
MANUFACTURER:	
IP ADDRESS:	TBD
SUBNET ADDRESS:	255.255.255.0
GATEWAY ADDRESS:	-
PORT 1	SPEED: 100 MBPS
	DUPLEX: FULL
	TYPE: COPPER

DEVICE NAME:	SPARE
EQUIPMENT:	
LOCATION:	
TYPE:	
PART NUMBER:	
MANUFACTURER:	
IP ADDRESS:	TBD
SUBNET ADDRESS:	255.255.255.0
GATEWAY ADDRESS:	-
SPEED: 100 MBPS	PORT 1
DUPLEX: FULL	
TYPE: COPPER	

DEVICE NAME:	SPARE
EQUIPMENT:	
LOCATION:	
TYPE:	
PART NUMBER:	
MANUFACTURER:	
IP ADDRESS:	TBD
SUBNET ADDRESS:	255.255.255.0
GATEWAY ADDRESS:	-
SPEED: 100 MBPS	PORT 1
DUPLEX: FULL	
TYPE: COPPER	

DEVICE NAME:	SPARE
EQUIPMENT:	
LOCATION:	
TYPE:	
PART NUMBER:	
MANUFACTURER:	
IP ADDRESS:	TBD
SUBNET ADDRESS:	255.255.255.0
GATEWAY ADDRESS:	-
SPEED: 100 MBPS	PORT 1
DUPLEX: FULL	
TYPE: COPPER	

MAIN CONTROL PANEL

ETH1333 (20-PORT SWITCH)
IP: 192.168.1.20

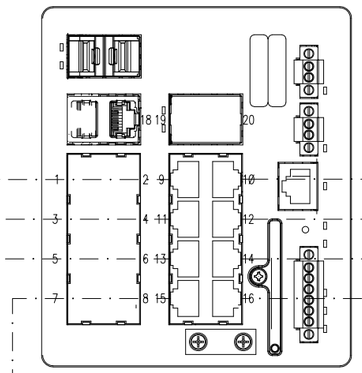

DEVICE NAME:	SPARE
EQUIPMENT:	
LOCATION:	
TYPE:	
PART NUMBER:	
MANUFACTURER:	
IP ADDRESS:	TBD
SUBNET ADDRESS:	255.255.255.0
GATEWAY ADDRESS:	-
PORT 1	SPEED: 100 MBPS
	DUPLEX: FULL
	TYPE: COPPER

DEVICE NAME:	SPARE
EQUIPMENT:	
LOCATION:	
TYPE:	
PART NUMBER:	
MANUFACTURER:	
IP ADDRESS:	TBD
SUBNET ADDRESS:	255.255.255.0
GATEWAY ADDRESS:	-
PORT 1	SPEED: 100 MBPS
	DUPLEX: FULL
	TYPE: COPPER

DEVICE NAME:	SPARE
EQUIPMENT:	
LOCATION:	
TYPE:	
PART NUMBER:	
MANUFACTURER:	
IP ADDRESS:	TBD
SUBNET ADDRESS:	255.255.255.0
GATEWAY ADDRESS:	-
PORT 1	SPEED: 100 MBPS
	DUPLEX: FULL
	TYPE: COPPER

C

DEVICE NAME:	PLANT NETWORK
EQUIPMENT:	SCADA/DCS
LOCATION:	CLIENT SIDE
TYPE:	SCADA
PART NUMBER:	NA
MANUFACTURER:	NA
IP ADDRESS:	TBD
SUBNET ADDRESS:	255.255.255.0
GATEWAY ADDRESS:	-
PORT 1	SPEED: 100 MBPS
	DUPLEX: FULL
	TYPE: COPPER

SIZE SHEET DO NOT SCALE PRINTS
THIRD ANGLE PROJECTION
© 2020 OVIVO. ALL RIGHTS RESERVED.
WORKMANSHIP STANDARD ES0001 APPLIES

OVIVO

THIS DRAWING CONTAINS CONFIDENTIAL PROPRIETARY INFORMATION OF OVIVO AND ITS AFFILIATES AND IS NOT TO BE DISCLOSED NOR TO BE USED EXCEPT FOR EVALUATING PROPOSALS OF OVIVO OR INSTALLING, OPERATING OR MAINTAINING OVIVO EQUIPMENT UNLESS OTHERWISE AUTHORIZED IN WRITING BY OVIVO. UNCONTROLLED COPY IF PRINTED.

DWG NO. **CSW1807-121**

REVISION D

INTENTIONALLY LEFT BLANK

© 2020 OVIVO. ALL RIGHTS RESERVED.

THIS DRAWING CONTAINS CONFIDENTIAL PROPRIETARY INFORMATION OF OVIVO AND ITS AFFILIATES AND IS NOT TO BE DISCLOSED NOR TO BE USED EXCEPT FOR EVALUATING PROPOSALS OF OVIVO OR INSTALLING, OPERATING OR MAINTAINING OVIVO EQUIPMENT UNLESS OTHERWISE AUTHORIZED IN WRITING BY OVIVO. UNCONTROLLED COPY IF PRINTED.

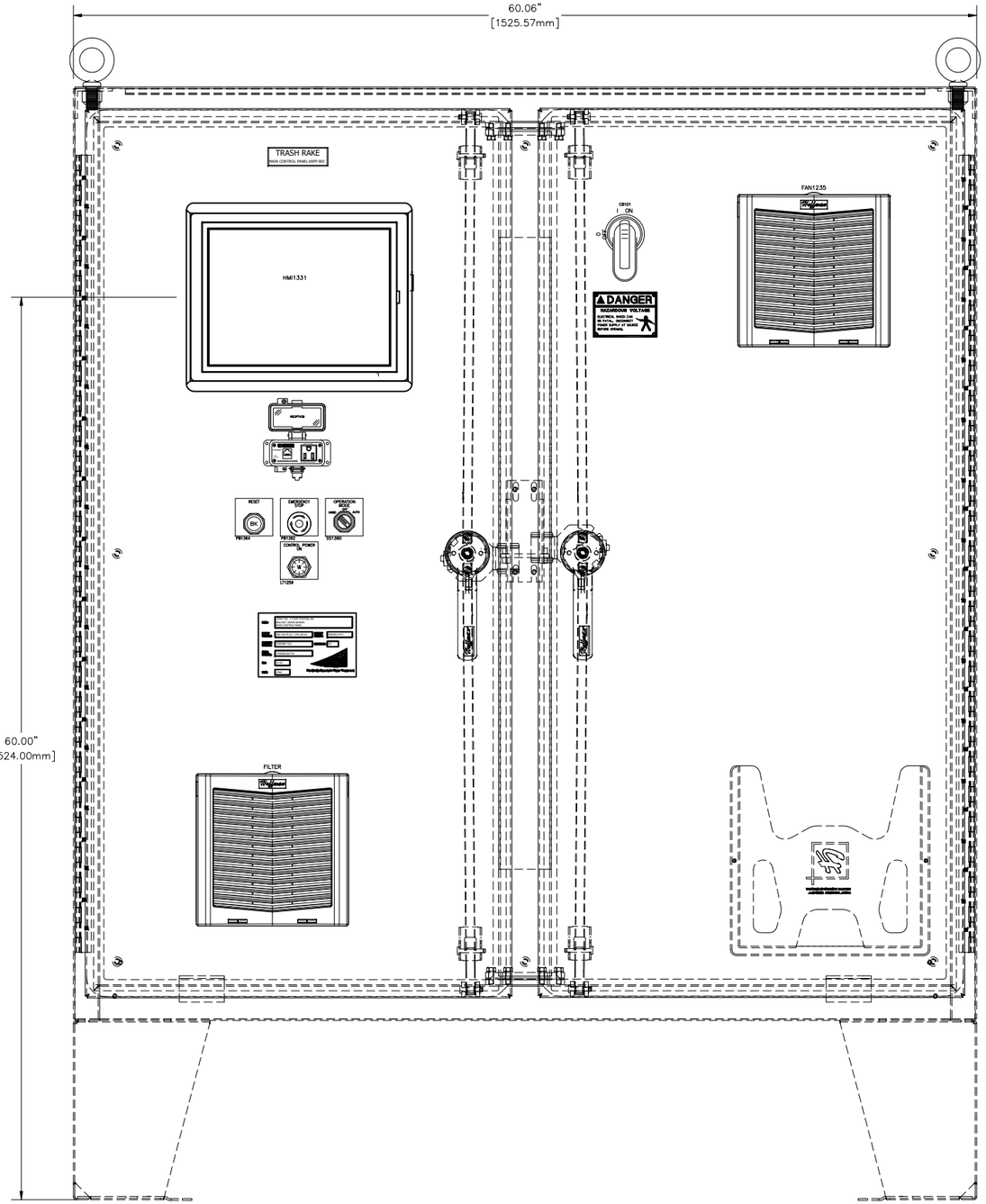

FRONT VIEW

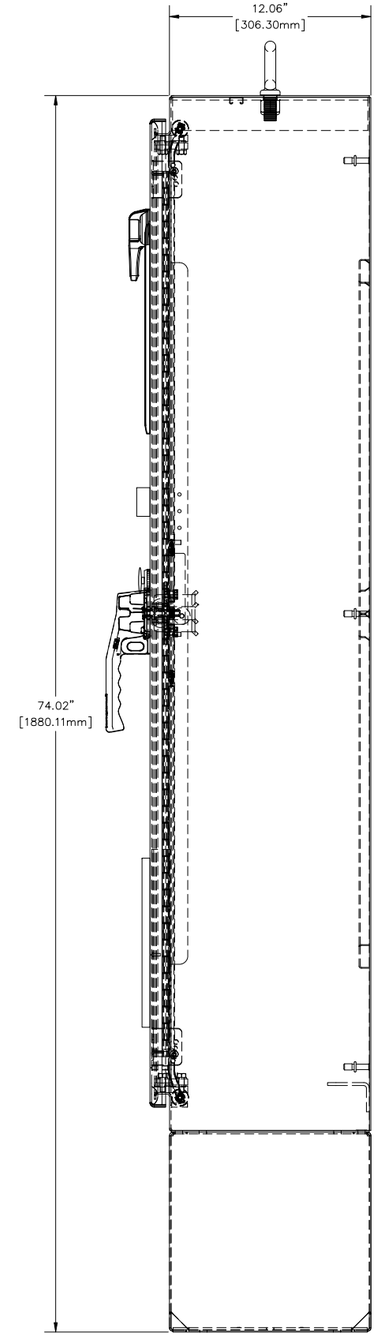

SIDE VIEW

OVIVO NAMEPLATE

ENGRAVE AS SHOWN

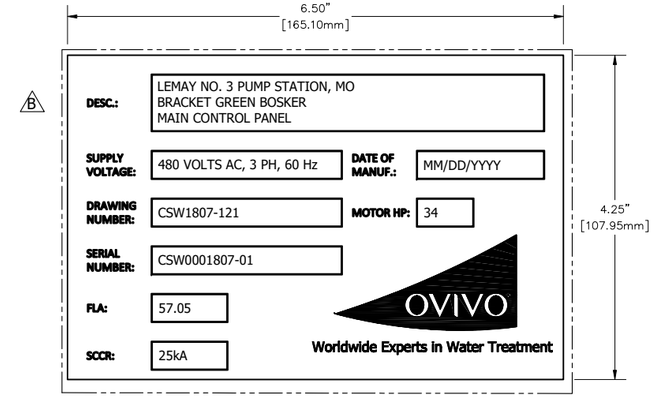

ENCLOSURE NAMEPLATE

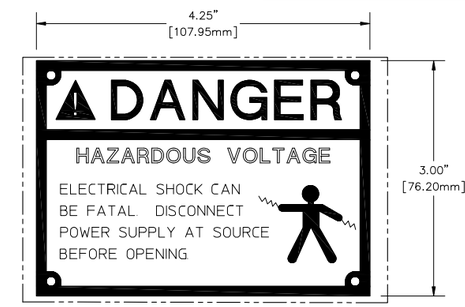

DANGER TAG

OVIVO NAMEPLATES

ENGRAVE AS SHOWN

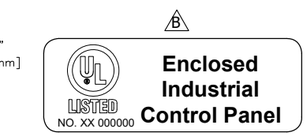

UL 508A LABEL TO BE ADD
INSIDE CONTROL PANEL

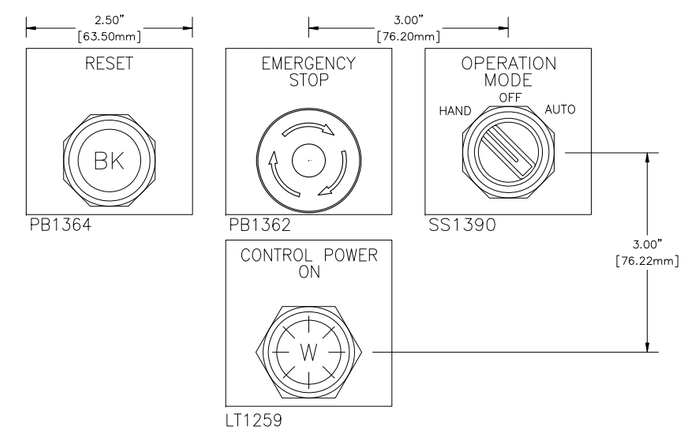

SIZE SHEET (DO NOT SCALE PRINTS)	THIRD ANGLE PROJECTION	OVIVO	THIS DRAWING CONTAINS CONFIDENTIAL PROPRIETARY INFORMATION OF OVIVO AND ITS AFFILIATES AND IS NOT TO BE DISCLOSED NOR TO BE USED EXCEPT FOR EVALUATING PROPOSALS OF OVIVO OR INSTALLING, OPERATING OR MAINTAINING OVIVO EQUIPMENT UNLESS OTHERWISE AUTHORIZED IN WRITING BY OVIVO. UNCONTROLLED COPY IF PRINTED.
	© 2020 OVIVO. ALL RIGHTS RESERVED.	DWG NO.	CSW1807-121
WORKMANSHIP STANDARD ES9001 APPLIES			7 of 21
			D REVISION

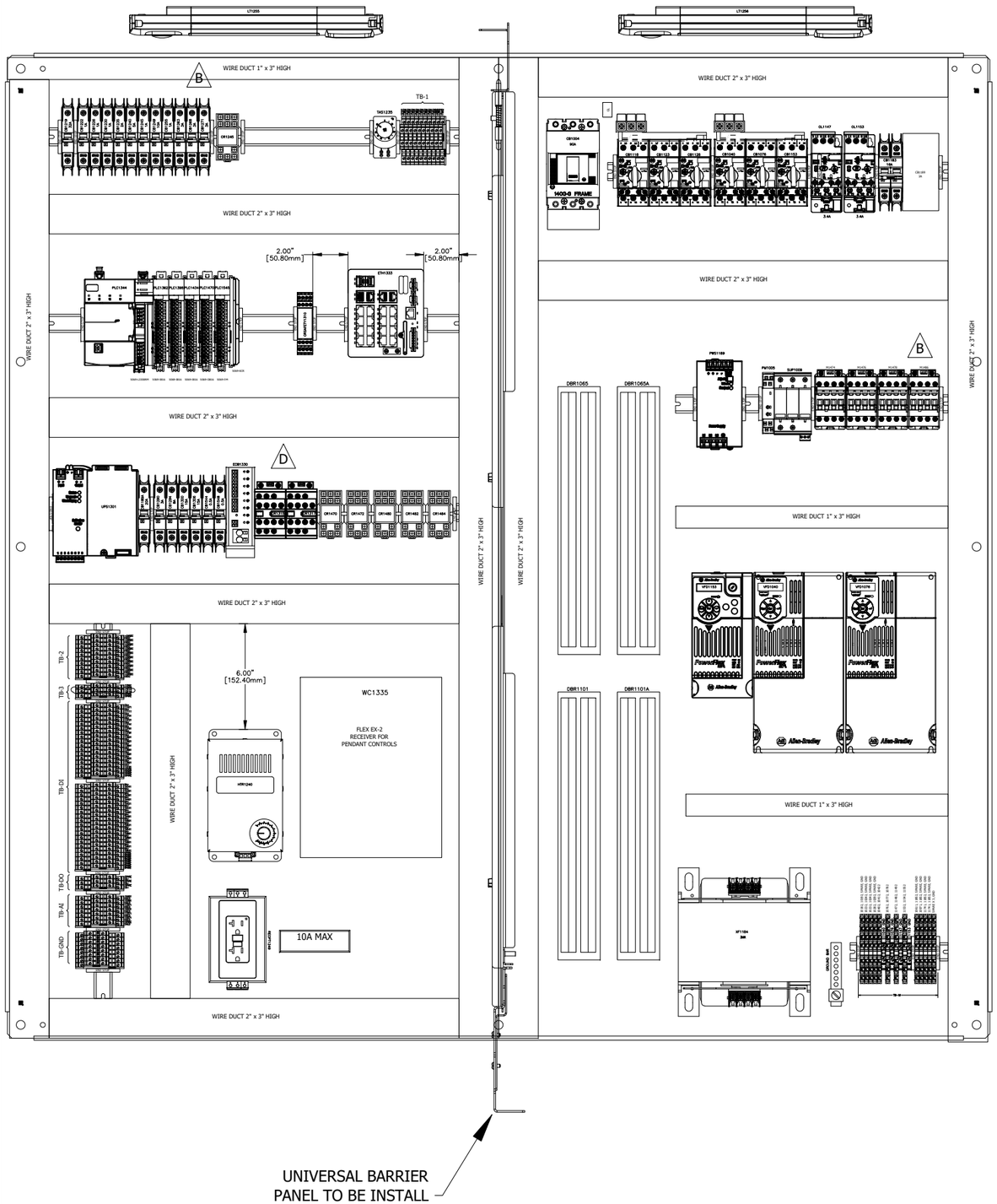

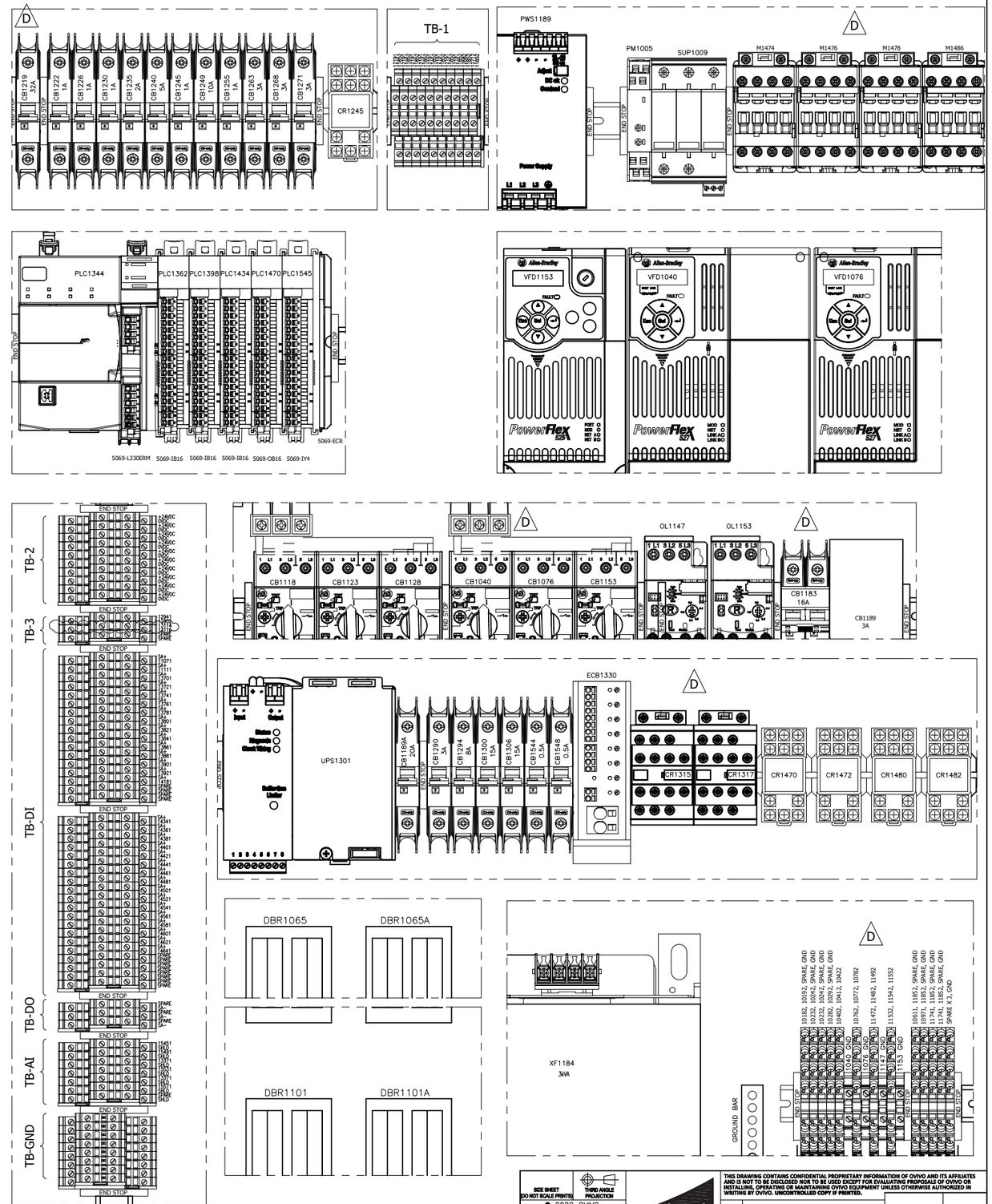

SIZE SHEET (DO NOT SCALE PRINTS)	THIRD ANGLE PROJECTION	THIS DRAWING CONTAINS CONFIDENTIAL PROPRIETARY INFORMATION OF OVIVO AND ITS AFFILIATES AND IS NOT TO BE DISCLOSED NOR TO BE USED EXCEPT FOR EVALUATING PROPOSALS OF OVIVO OR INSTALLING, OPERATING OR MAINTAINING OVIVO EQUIPMENT UNLESS OTHERWISE AUTHORIZED IN WRITING BY OVIVO. UNCONTROLLED COPY IF PRINTED.	
© 2020 OVIVO. ALL RIGHTS RESERVED.	OVIVO	DWG NO. CSW1807-121	8 of 21	D REVISION
WORKMANSHIP STANDARD ES0001 APPLIES			

BILL OF MATERIAL

	ITEM	TAGS	QTY	CATALOG	MFG	DESCRIPTION
	1	ENCLOSURE	1	A62H6012SSLP3PT	HOFFMAN	2-DOOR FLOOR-STAND 3-POINT LATCHES TYPE 4X, 62"X60"X12", SS TYPE 304
	2	ENCLOSURE	1	A60P60	HOFFMAN	PANEL FOR TYPE 3R 4 4X 12 13 ENCLOSURE, FITS 60X48, WHITE, STEEL
	3	ENCLOSURE	1	AHCI238S	HOFFMAN	CORROSION INHIBITOR SPRAY, 9.45 OUNCE CAN, PACKAGE QUANTITY 6
	4	FAN1235	1	HF1016414	HOFFMAN	HF10 SIDE-MOUNT FILTER FAN, 115V 159CFM, LT GRAY
	5	FAN1235	1	HG1000504	HOFFMAN	CLICK IMAGE TO EXPAND INTO LARGER VIEWHOVER TO MAGNIFY IMAGE OR CLICK TO ENLARGE HG FILTER FAN EXHAUST GRILLE IP55, FITS HF10 FANS 10-INCH, LT
	6	TAS1235	1	THERM16F	HOFFMAN	THERMOSTAT CONTROLLER, 2.64X1.97X1.50, 115V FAHREHNEIT, LT GRAY, PLASTIC
	7	LT1255, LT1256	2	EL900D	HOFFMAN	LED ENCLOSURE LIGHT, 900 LM, 100-240 VAC
	8	LT1255, LT1256	2	ELA02MF	HOFFMAN	MAGNETS FOR MAGNETIC MOUNTING
	9	LT1255, LT1256	2	ELC1001PBUL	HOFFMAN	CABLE, INFEED FOR EL LED ENCLOSURE LIGHTS, 1.0 METERS, 100-240 VAC, 3-POLE, BLACK
	10	LT1255, LT1256	2	ELCN1	HOFFMAN	CONNECTORS FOR EL LED ENCLOSURE LIGHT, AC, 250A, 16V, BLACK
	11	RECPT1249	1	5603049	PHOENIX CONTACT	RAIL MOUNTED DUAL POWER OUTLET WITH TWO 120VAC 20A RECEPTACLES EQUIPPED WITH GROUND FAULT CIRCUIT INTERRUPTION
	12	RECPT1263	1	P-R2-F2R0	GRACEPORT	PANEL INTERFACE CONNECTOR WITH CATEGORY 5E RJ45; PANEL MOUNT HOUSING; UL TYPE 4X; SIMPLEX OUTLET
	13	ENCLOSURE	1	A62BP12	HOFFMAN	UNIVERSAL BARRIER PANEL FOR UNIBODY FREE-STAND, FITS A=62 AND C=12, WHITE, STEEL
	14	HTR1240	1	DAH4001B	HOFFMAN	ELECTRIC HEATER, 115VAC 400W, 7.50X4.25X4.38 INCH, BRUSHED, ALUMINUM
	15	CB1104	1	140G-G2C3-C90	ROCKWELL AUTOMATION	MOLDED CASE,90 AMP, 3-POLE, 600Y/347 VOLT AC, G FRAME, 25 KAIC
	16	CB1104	1	140G-G-RVM12B	ROCKWELL AUTOMATION	ACCESSORY FOR MCCB FOR VARIABLE DEPTH ROTARY OPERATING KIT, INCLUDES EXTERNAL HANDLE, OPERATING SHAFT, AND MCCB MOUNTED OPERATING MECHANISM, BLACK HANDLE
	17	CB1104	1	KA2U	BURNDY	SINGLE GROUND LUG
	18	CB102	1	140G-G-TLC13	ROCKWELL AUTOMATION	TERMINAL LUGS FOR MCCB, COPPER
	19	PM1005	1	2903528	PHOENIX CONTACT	PHASE MONITORING RELAY, FOR PHASE SEQUENCE AND ASYMMETRY OF 3-PHASE VOLTAGES 480VAC, 1PDT, WITH SCREW CONNECTION
	20	SUP1009	1	2910386	PHOENIX CONTACT	TYPE 2 SURGE PROTECTION DEVICE, 3-CHANNEL WITH REMOTE INDICATOR CONTACT FOR 480 VAC DELTA
	21	CB1018, CB1023, CB1028	3	140MT-C3E-B25	ALLEN BRADLEY	BREAKER, MOTOR PROTECTION, ROTARY STYLE, 1.6-2.5A, 480VAC, C-FRAME, MAGNETIC TRIP
	22	CB1153	1	140MT-C3E-C16	ALLEN BRADLEY	BREAKER, MOTOR PROTECTION, ROTARY STYLE, 10-16A, 480VAC, C-FRAME, MAGNETIC TRIP
D	23	CB1040, CB1076	2	140MT-F9E-C32	ALLEN BRADLEY	BREAKER, MOTOR PROTECTION, ROTARY STYLE, 24-32A, 480VAC, F-FRAME, THERMAL/FIXED MAGNETIC TRIP
	24	CB1040, CB1076, CB1118, CB1123, CB1128, CB1153	6	140MTCAFA11	ALLEN BRADLEY	140MT AUXILIARY CONTACT WITH 1NO CONTACT AND 1NC CONTACT FRONT MOUNT
D	25	M1474, M1476, M1478, M1486	4	100-E09KJ10	ROCKWELL AUTOMATION	100-E-MCS-E CONTACTOR, 9A, AC3 DUTY, 24-60V AC, 20-60V DC ELECTRONIC COIL, 1 N.O
	26	ACCESSORY FOR MPCB	2	140MT-C-WTEN	ALLEN BRADLEY	FEEDER TERMINAL - COMPACT BUSBARS, 64 A
	27	ACCESSORY FOR MPCB	2	140MT-C-W453	ALLEN BRADLEY	COMPACT BUSBAR, 64A, 3 X 45 MM SPACING, FOR 140MT, MOTOR PROTECTION
	28	OL1147, OL1153	2	193-T1APM	ALLEN BRADLEY	DIN RAIL/PANEL MOUNT ADAPTER
	29	OL1147, OL1153	2	193-T1AB40	ALLEN BRADLEY	RELAY, OVERLOAD, 2.9 - 4.0A, T1, IEC, BI-METALLIC
	30	VFD1153	1	25B-D010N114	ALLEN BRADLEY	AC Drive, with Embedded EtherNet/IP and Safety, 380...480V AC, 3 Phase, 10.5 Amps, 5 Hp, 4 kW Normal Duty; 5 Hp, 4 kW Heavy Duty, POWERFLEX 525, 5HP, Frame B, IP20 NEMA / Open Type, Filter
	31	VFD1040, VFD1076	2	25C-D024N114	ALLEN BRADLEY	AC Drive, with Embedded EtherNet/IP and Safety, 380...480V AC, 3 Phase, 24 Amps, 15 Hp, 11 kW Normal Duty; 15 Hp,11 kW Heavy Duty, POWERFLEX 527, 15HP, Frame C, IP20 NEMA / Open Type, Filter
	32	DBR1065, DBR1065A, DBR1101, DBR1101A	4	AK-R2-120P1K2	ALLEN BRADLEY	BRAKING RESISTOR - ENCLOSED - PowerFlex 70 DB Resistor, 120 ohm, 260 watt, PROTECTED, 260W, PROTECTED BY TEMPERATURE CONTROL SWITCH
	33	CB15444, CB15448	2	1489-M1C005	ALLEN BRADLEY	MINIATURE CIRCUIT BREAKER, 1-POLE, 0.5 AMPS, C-CURVE, 120VAC
	34	CB1222, CB1226, CB1230, CB1243, CB1245, CB1255	6	1489-M1C010	ALLEN BRADLEY	MINIATURE CIRCUIT BREAKER, 1-POLE, 1 AMPS, C-CURVE, 120VAC
	35	CB1235	1	1489-M1C020	ALLEN BRADLEY	MINIATURE CIRCUIT BREAKER, 1-POLE, 2 AMPS, C-CURVE, 120VAC
B	36	CB1263, CB1268, CB1271, CB1290	4	1489-M1C030	ALLEN BRADLEY	MINIATURE CIRCUIT BREAKER, 1-POLE, 3 AMPS, C-CURVE, 120VAC
	37	CB1240	1	1489-M1C050	ALLEN BRADLEY	MINIATURE CIRCUIT BREAKER, 1-POLE, 5 AMPS, C-CURVE, 120VAC
	38	CB1294	1	1489-M1C080	ALLEN BRADLEY	MINIATURE CIRCUIT BREAKER, 1-POLE, 8 AMPS, C-CURVE, 120VAC
	39	CB1249	1	1489-M1C100	ALLEN BRADLEY	MINIATURE CIRCUIT BREAKER, 1-POLE, 10 AMPS, C-CURVE, 120VAC
	40	CB1300, CB1306	2	1489-M1C150	ALLEN BRADLEY	MINIATURE CIRCUIT BREAKER, 1-POLE, 15 AMPS, C-CURVE, 120VAC
	41	CB1189A	1	1489-M1C200	ALLEN BRADLEY	MINIATURE CIRCUIT BREAKER, 1-POLE, 20 AMPS, C-CURVE, 120VAC
D	42	CB1219	1	1489-M1C320	ALLEN BRADLEY	MINIATURE CIRCUIT BREAKER, 1-POLE, 32 AMPS, C-CURVE, 120VAC
	43	CB1183	1	1489-M2D160	ALLEN BRADLEY	MINIATURE CIRCUIT BREAKER, 2-POLE, 16 AMPS, D-CURVE, 120VAC
	44	CB1189	1	1489-M3D030	ALLEN BRADLEY	MINIATURE CIRCUIT BREAKER, 3-POLE, 3 AMPS, D-CURVE, 120VAC
	45	XF1184	1	SP3000ACP	HAMMOND	INDUSTRIAL CONTROL TRANSFORMER, 3.0 KVA, PRIMARY 240/480 VOLTS, SECONDARY 120/240 VAC
	46	XF1184	1	SPFG1	HAMMOND	FINGER GUARDS FOR TRANSFORMER
	47	UPS1301/ BAT1303	1	UBC10.241	PULS	UNINTERRUPTABLE POWER SUPPLY, DC-UPS FOR BUILT-IN BATTERY 24VDC INPUT AND 24VDC OUTPUT, 10A
	48	PWS1189	1	QT20.241	PULS	POWER SUPPLY, 3-PHASE AC 480VAC TO 24 VDC, 20 AMP, 480 WATT
	49	ECB1330	1	2905744	PHOENIX CONTACT	8-CHANNEL, ELECTRONIC CIRCUIT BREAKER WITH ACTIVE CURRENT LIMITATION FOR PROTECTING EIGHT LOADS AT 24 V DC IN THE EVENT OF OVERLOAD AND SHORT CIRCUIT. WITH NOMINAL CURRENT ASSISTANT AND ELECTRONIC LOCKING OF THE SET NOMINAL CURRENTS. FOR INSTALLATION ON DIN RAILS.
	50	PLC1344	1	5069-L330ERM	ALLEN BRADLEY	COMPACTLOGIX ETHERNET MOTION CONTROLLER, ETHERNET/IP, USB COMMUNICATION
	51	PLC1344	1	5069-RTB4-SPRING	ALLEN BRADLEY	REMOVABLE TERMINAL BLOCK FOR CONTROLLER MOD POWER, 4-PIN
	52	PLC1344	1	5069-RTB6-SPRING	ALLEN BRADLEY	REMOVABLE TERMINAL BLOCK FOR CONTROLLER SA POWER, 6-PIN
	53	PLC1362, PLC1398, PLC1434	3	5069-IB16	ALLEN BRADLEY	COMPACTLOGIX 16-POINT DIGITAL INPUT MODULE, 24VDC INPUTS
	54	PLC1470	1	5069-OB16	ALLEN BRADLEY	COMPACTLOGIX 16-POINT RELAY OUTPUT MODULE, 24VDC OUTPUTS
	55	PLC1545	1	5069-IY4	ALLEN BRADLEY	COMPACTLOGIX 4-POINT ANALOG INPUT MODULE, CURRENT/VOLTAGE
	56	PLC1362, PLC1398, PLC1434, PLC1470, PLC1545	5	5069-RTB18-SCREW RTB	ALLEN BRADLEY	TERMINAL BLOCK, SCREW TYPE, 18 PINS, FOR ALL ABOVE PLC I/O MODULES
	57	PLC ACCESSORY	1	5069-ECR	ALLEN BRADLEY	COMPACTLOGIX RIGHT END CAP FOR TERMINATION
	58	HMI1331	1	2711P-T15C21D8S	ROCKWELL AUTOMATION	PANELVIEW PLUS 7 STANDARD TERMINAL, TOUCH SCREEN, 15 INCHES, TFT COLOR, SINGLE ETHERNET, 24V DC, WINDOWS CE 6 , STANDARD MODEL
	59	ETH1333	1	1783-CMS20DN	ALLEN BRADLEY	STRATIX 5200, 18 COPPER 10/1000 PORTS, 2 COMBO 10/1000 PORTS
	60	WC1335	1 SET	FLEX 8EX2 SERIES	MAGNETEX MATERIAL HANDLING	WIRELESS PENDANT SYSTEM, INCLUDING ONE RECEIVER AND TWO TRANSMITTERS, WIRELESS ANTENNA, CUSTOM LABEL, E-STOP, ONE SELECTOR SWITCH
	61	CR1245	1	RH3B-ULC-120AC	IDEC	CONTROL RELAY, 3PDT, WITH INDICATOR AND CHECK BUTTON, 120VAC
	62	CR1245	1	SH3B-05C	IDEC	SOCKET, RELAY
D C	63	CR1470, CR1472, CR1480, CR1482, CR1484	5	RH3B-ULC-DC24V	IDEC	CONTROL RELAY, 3PDT, WITH INDICATOR AND CHECK BUTTON, 24VDC
D C	64	CR1470, CR1472, CR1480, CR1482, CR1484	5	SH3B-05C	IDEC	SOCKET, RELAY
	65	PB1364	1	ABD111NUB	IDEC	PUSH BUTTON - MOMENTARY, NEMA 4/4X, BLACK, WITH 1 N.O. + 1 N.C. CONTACT BLOCKS
	66	LT1259	1	APD1QH2DNW	IDEC	WHITE PILOT LIGHT - STANDARD, FULL VOLTAGE, NEMA 4/4X
	67	PB1362	1	AVD311NUR	IDEC	MUSHROOM HEAD EMERGENCY STOP BUTTON, 40 MM, PUSH LOCK, TURN RESET, RED, NEMA 4X, WITH (1) N.O. + (1) N.C. CONTACTS
	68	SS1390	1	ASD211NU	IDEC	TWND SERIES, 2-POSITION MAINTAINED SELECTOR SWITCH, KNOB TYPE, WITH (1) N.O. + (1) N.C. CONTACT BLOCKS
	69	PB1364, LT1259, PB1362, SS1390	4	GRAVOGRAPH	GRAVOPLY ULTRA	GENERIC OPERATOR TAG - ENGRAVE AS SHOWN
	70	TB-M	13	3038338	PHOENIX CONTACT	3LEVEL TERMINAL BLOCK - ST 4-PE/3L, MULTI-LEVEL, 32AMPS, GRAY, 0.08-6MM^2, 28-10 AWG, CLIPLINE - SPRING CAGE TERMINAL BLOCK
	71	TB-GND	10	3044759	PHOENIX CONTACT	GROUND TERMINAL, NUMBER OF CONNECTIONS: 4, CONNECTION METHOD: SCREW CONNECTION, CROSS SECTION: 0.14 MM2 - 6 MM2, MOUNTING TYPE: NS 35/7,5, NS 35/15, COLOR: GREEN-YELLOW
B	72	TB-1, TB-2, TB-3, TB-DI, TB, TB-AI	70	3044814	PHOENIX CONTACT	DOUBLE-LEVEL TERMINAL BLOCK, NOM. VOLTAGE: 800 V, NOMINAL CURRENT: 30 A, CONNECTION METHOD: SCREW CONNECTION, 1ST AND 2ND LEVEL, RATED CROSS SECTION: 4 MM2, CROSS SECTION: 0.14 MM2 - 6 MM2, MOUNTING TYPE: NS 35/7,5, NS 35/15, COLOR: GRAY
	73	TB-1, TB-2, TB-3, TB-DI, TB, TB-AI	10	3047293	PHOENIX CONTACT	END COVER
	74	TB ACCESSORY	30	800886	PHOENIX CONTACT	END BRACKET - E/NS 35 N, ACCESSORY, END BRACKET, GRAY, FOR THE NS 35 DIN RAIL, 9.5MM WIDTH
	75	ACCESSORY	AS REQUIRED	807012	PHOENIX CONTACT	DIN rail perforated, acc. to EN 60715, material: Steel, galvanized, passivated with a thick layer, Standard profile, color: silver, 35mm, 7.5mm, 1000mm, DIN
	76	ENCLOSURE ACCESSORY	A/R	TYD2X3NPW6	THOMAS & BETTS	NARROW SLOT WIRING DUCT, PVC, 2"x3" HIGH
	77	ENCLOSURE ACCESSORY	A/R	TYD2CPW6	THOMAS & BETTS	WIRE DUCT COVER FOR 2" DUCTS
	78	ENCLOSURE ACCESSORY	A/R	TYD1X3NPW6	THOMAS & BETTS	NARROW SLOT WIRING DUCT, PVC, 1"x3" HIGH
	79	ENCLOSURE ACCESSORY	A/R	TYD1CPW6	THOMAS & BETTS	WIRE DUCT COVER FOR 1" DUCTS
	80	ACCESORRY	1	679002	OVIVO	NAME PLATE (ETCH AS SHOWN)
	81	ACCESORRY	1	49046A	OVIVO	NAME PLATE - "DANGER"
	82	"TRASH RAKE MAIN CONTROL PANEL"	1	592273	OVIVO	ENCLOSURE EQUIPMENT TAG ID, BLACK BACKROUND WITH 3/16 INCH WHITE LETTERS, NOMINAL HEIGHT OF NAMEPLATES 2 INCHES.
	83	GROUND BAR	1	GBK520	EATON	5 TERMINAL GROUND BAR KIT,1-3/4 IN MOUNTING HOLE DISTANCE, 1-2/0 LUG,GROUND BAR KIT,CH,5 TERMINALS,0.75 IN,CH LOADCENTERS, FOR 2/4 CIRCUIT LOADCENTERS USE TYPE GBK5 OR GBK520 GROUND BAR
C	84	CRSAFETY1310	1	LG5925-48-61-24	AUTOMATIONDIRECT	DOLD SAFETY RELAY, EMERGENCY STOP AND SAFETY GATES, 2-CHANNEL, 24 VAC/VDC, (3) N.O. SAFETY OUTPUT(S), (1) N.C. MONITORING OUTPUT(S), FIXED SCREW TERMINALS.
D	85	CR1315, CR1317	2	AFS09-30-22-11	ABB	AFS SERIES, ABB SAFETY CONTACTOR SERIES AFS09-30-22-11, 20-60VDC
	86	TB-M	4	3044102	PHOENIX CONTACT	UT-4 FEED THROUGH TERMINAL BLOCK NOM. VOLTAGE 1000V, CURRENT 32A, NO. OF CONNECTION 2, SCREW CONNECTION, CROSS SECTION 0.14MM-6MM, MOUNTING TYPE NS 35/7.5, NS 35/15, GRAY COLOR
D	87	TB-M	4	3047028	PHOENIX CONTACT	D-UT 2.5/10 END COVER

SIZE SHEET (DO NOT SCALE PRINTS) | THIRD ANGLE PROJECTION

© 2020 OVIVO. ALL RIGHTS RESERVED.

WORKMANSHIP STANDARD ES0001 APPLIES

OVIVO

THIS DRAWING CONTAINS CONFIDENTIAL PROPRIETARY INFORMATION OF OVIVO AND ITS AFFILIATES AND IS NOT TO BE DISCLOSED NOR TO BE USED EXCEPT FOR EVALUATING PROPOSALS OF OVIVO OR INSTALLING, OPERATING OR MAINTAINING OVIVO EQUIPMENT UNLESS OTHERWISE AUTHORIZED IN WRITING BY OVIVO. UNCONTROLLED COPY IF PRINTED.

DWG NO. CSW1807-121

REVISION D

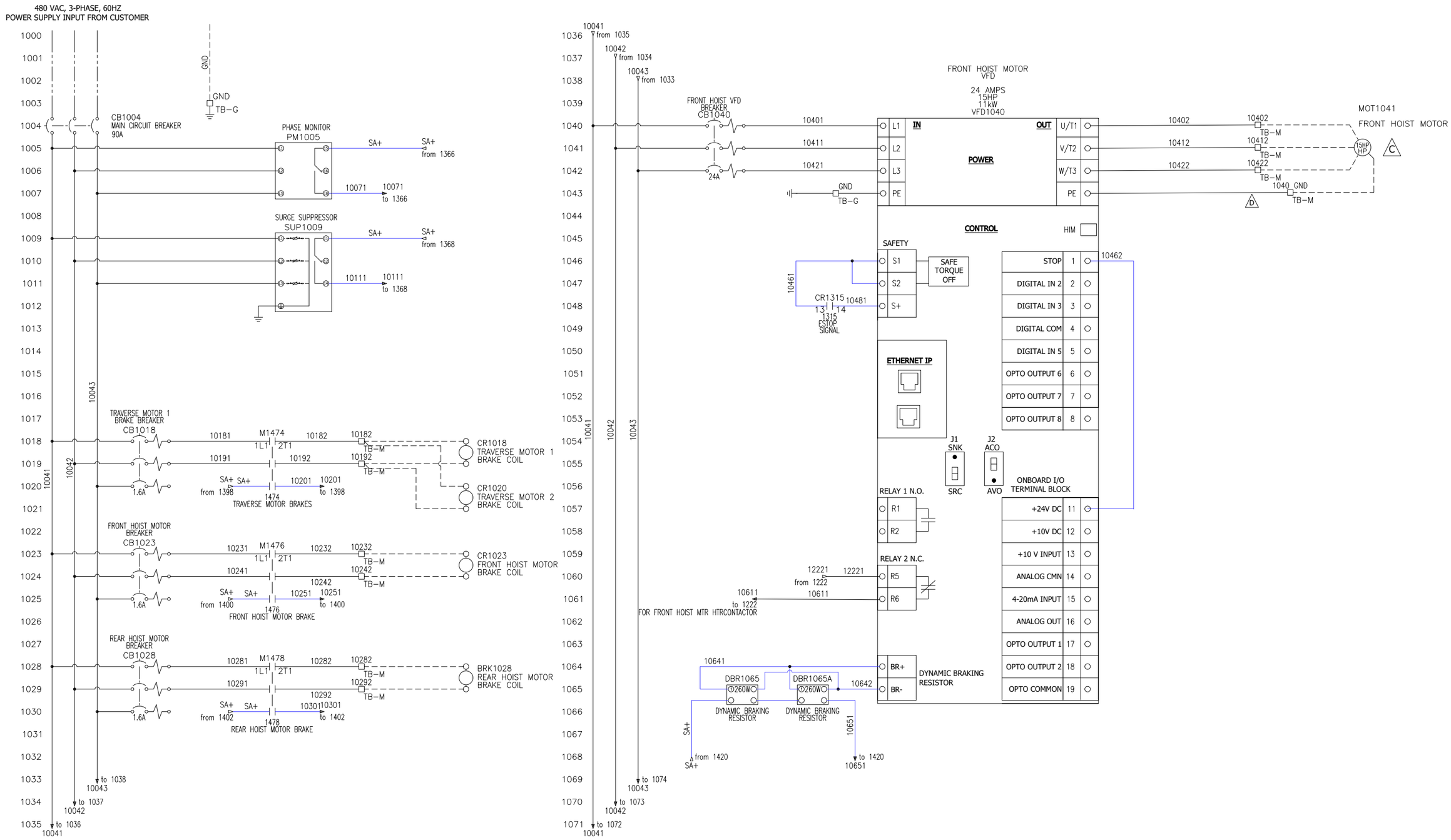

SIZE SHEET (DO NOT SCALE PRINTS)

THIRD ANGLE PROJECTION

© 2020 OVIVO. ALL RIGHTS RESERVED.

WORKMANSHIP STANDARD ES0001 APPLIES

OVIVO

THIS DRAWING CONTAINS CONFIDENTIAL PROPRIETARY INFORMATION OF OVIVO AND ITS AFFILIATES AND IS NOT TO BE DISCLOSED NOR TO BE USED EXCEPT FOR EVALUATING PROPOSALS OF OVIVO OR INSTALLING, OPERATING OR MAINTAINING OVIVO EQUIPMENT UNLESS OTHERWISE AUTHORIZED IN WRITING BY OVIVO. UNCONTROLLED COPY IF PRINTED.

DWG NO. CSW1807-121

REVISION D

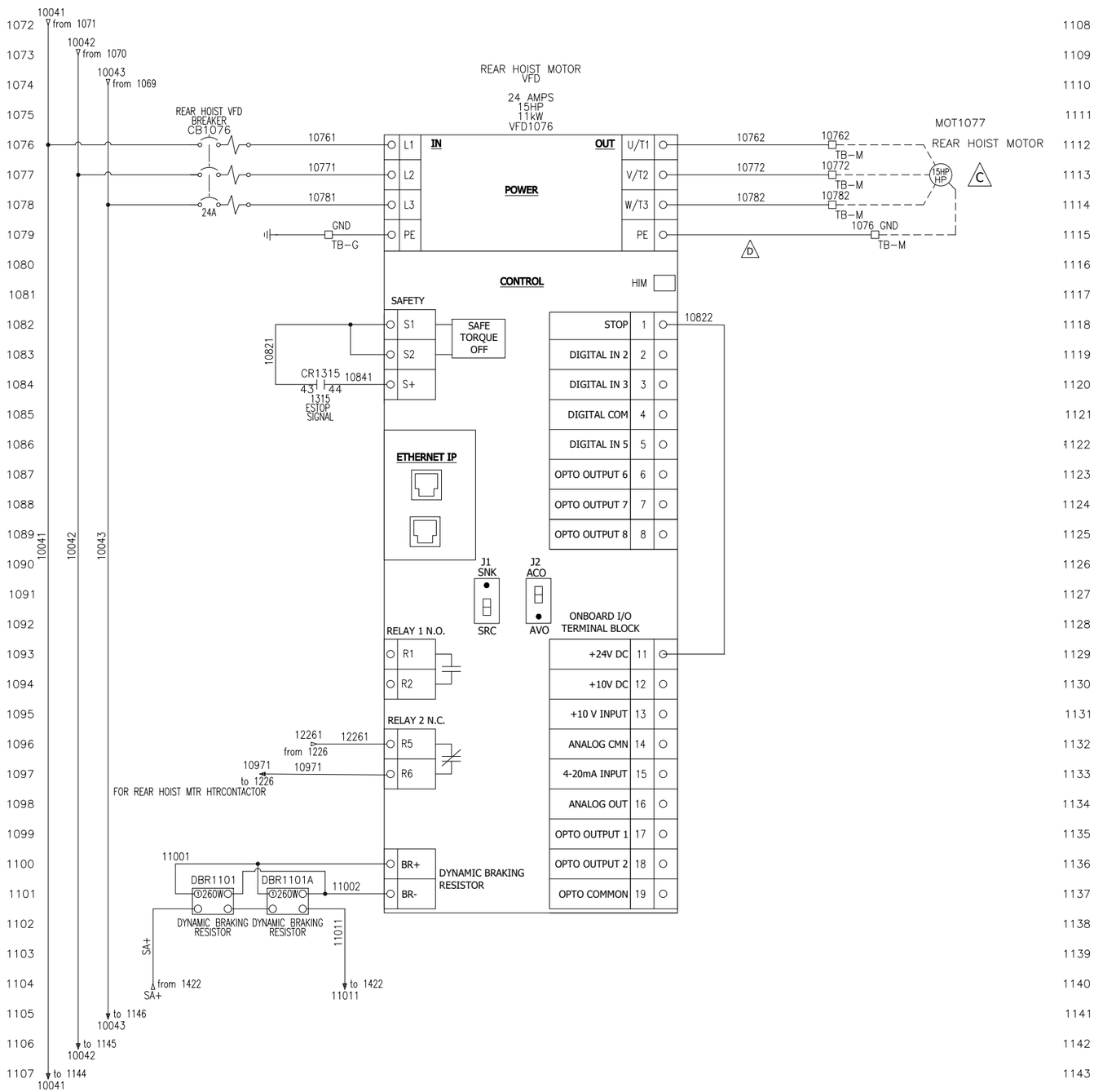

SIZE SHEET (DO NOT SCALE PRINTS)	THIRD ANGLE PROJECTION	OVIVO	THIS DRAWING CONTAINS CONFIDENTIAL PROPRIETARY INFORMATION OF OVIVO AND ITS AFFILIATES AND IS NOT TO BE DISCLOSED NOR TO BE USED EXCEPT FOR EVALUATING PROPOSALS OF OVIVO OR INSTALLING, OPERATING OR MAINTAINING OVIVO EQUIPMENT UNLESS OTHERWISE AUTHORIZED IN WRITING BY OVIVO. UNCONTROLLED COPY IF PRINTED.
© 2020 OVIVO. ALL RIGHTS RESERVED.			DWG NO. CSW1807-121
WORKMANSHIP STANDARD ES0001 APPLIES			11 of 21
			D REVISION

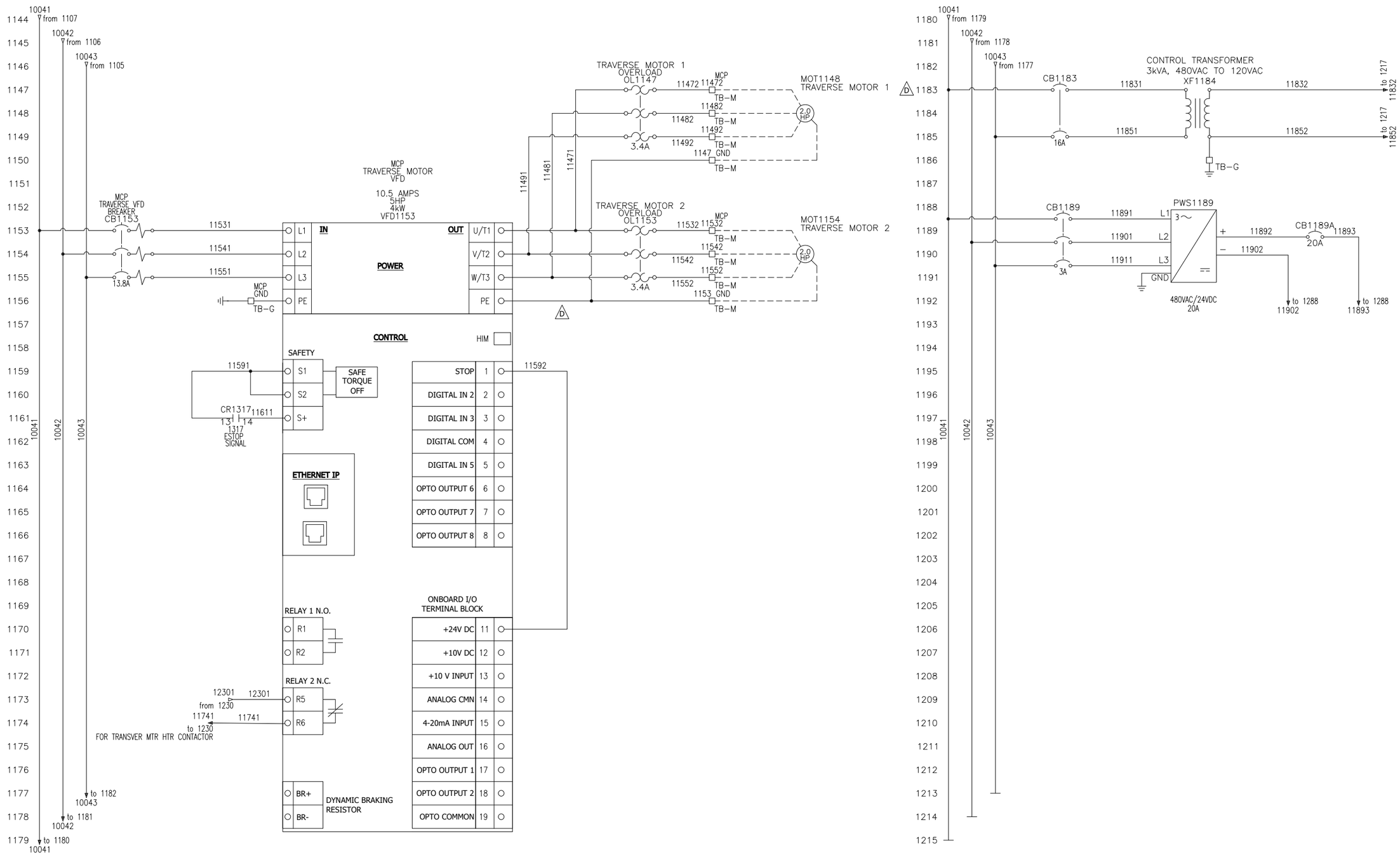

SIZE SHEET (DO NOT SCALE PRINTS)	THIRD ANGLE PROJECTION	
© 2020 OVIVO. ALL RIGHTS RESERVED.	OVIVO	DWG NO. CSW1807-121
WORKMANSHIP STANDARD ES0001 APPLIES		12 of 21

THIS DRAWING CONTAINS CONFIDENTIAL PROPRIETARY INFORMATION OF OVIVO AND ITS AFFILIATES AND IS NOT TO BE DISCLOSED NOR TO BE USED EXCEPT FOR EVALUATING PROPOSALS OF OVIVO OR INSTALLING, OPERATING OR MAINTAINING OVIVO EQUIPMENT UNLESS OTHERWISE AUTHORIZED IN WRITING BY OVIVO. UNCONTROLLED COPY IF PRINTED.

REVISION D

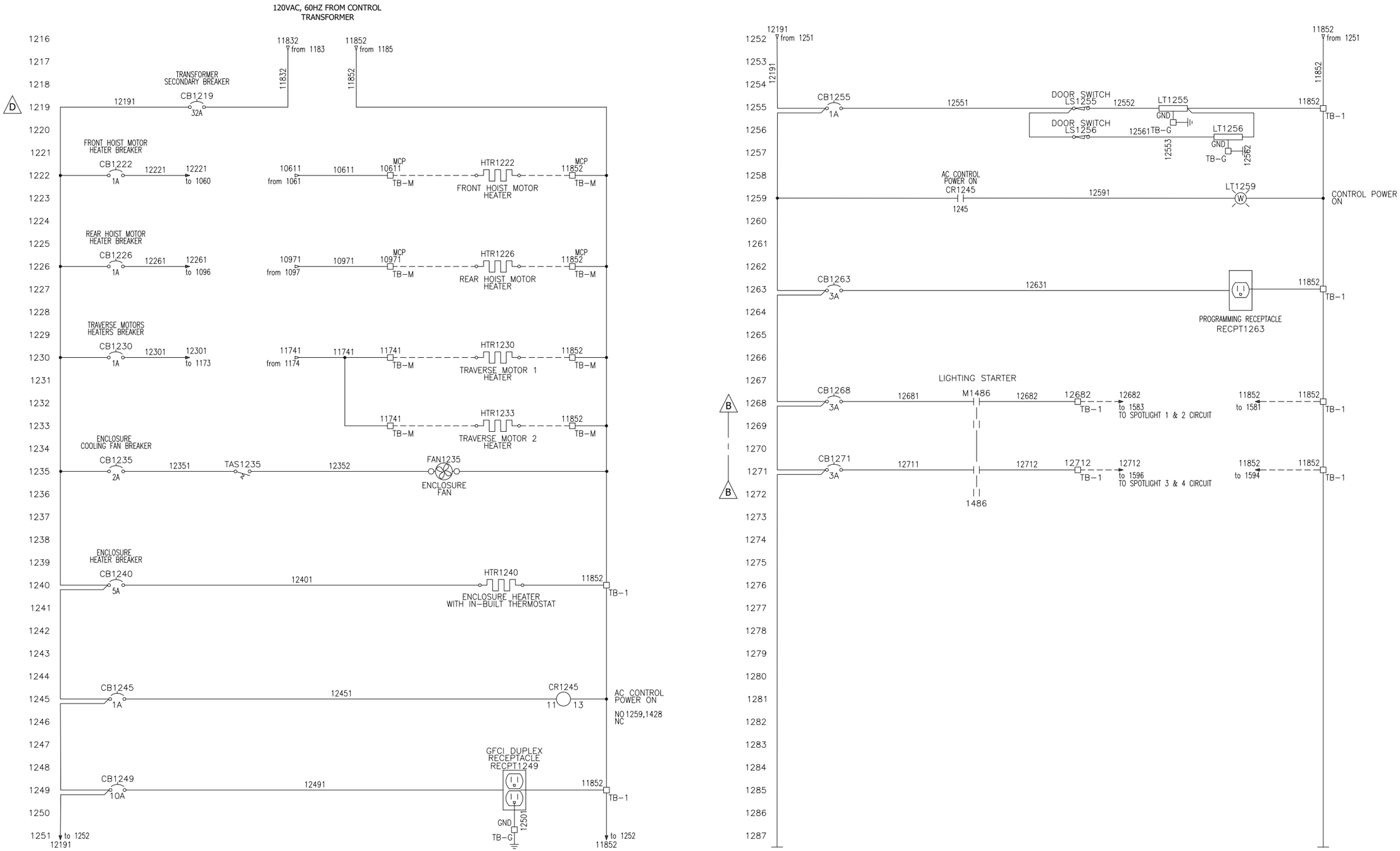

SIZE SHEET (DO NOT SCALE PRINTS)

THIRD ANGLE PROJECTION

© 2020 OVIVO. ALL RIGHTS RESERVED.

WORKMANSHIP STANDARD ES0001 APPLIES

OVIVO

THIS DRAWING CONTAINS CONFIDENTIAL PROPRIETARY INFORMATION OF OVIVO AND ITS AFFILIATES AND IS NOT TO BE DISCLOSED NOR TO BE USED EXCEPT FOR EVALUATING PROPOSALS OF OVIVO OR INSTALLING, OPERATING OR MAINTAINING OVIVO EQUIPMENT UNLESS OTHERWISE AUTHORIZED IN WRITING BY OVIVO. UNCONTROLLED COPY IF PRINTED.

DWG NO. CSW1807-121

REVISION D

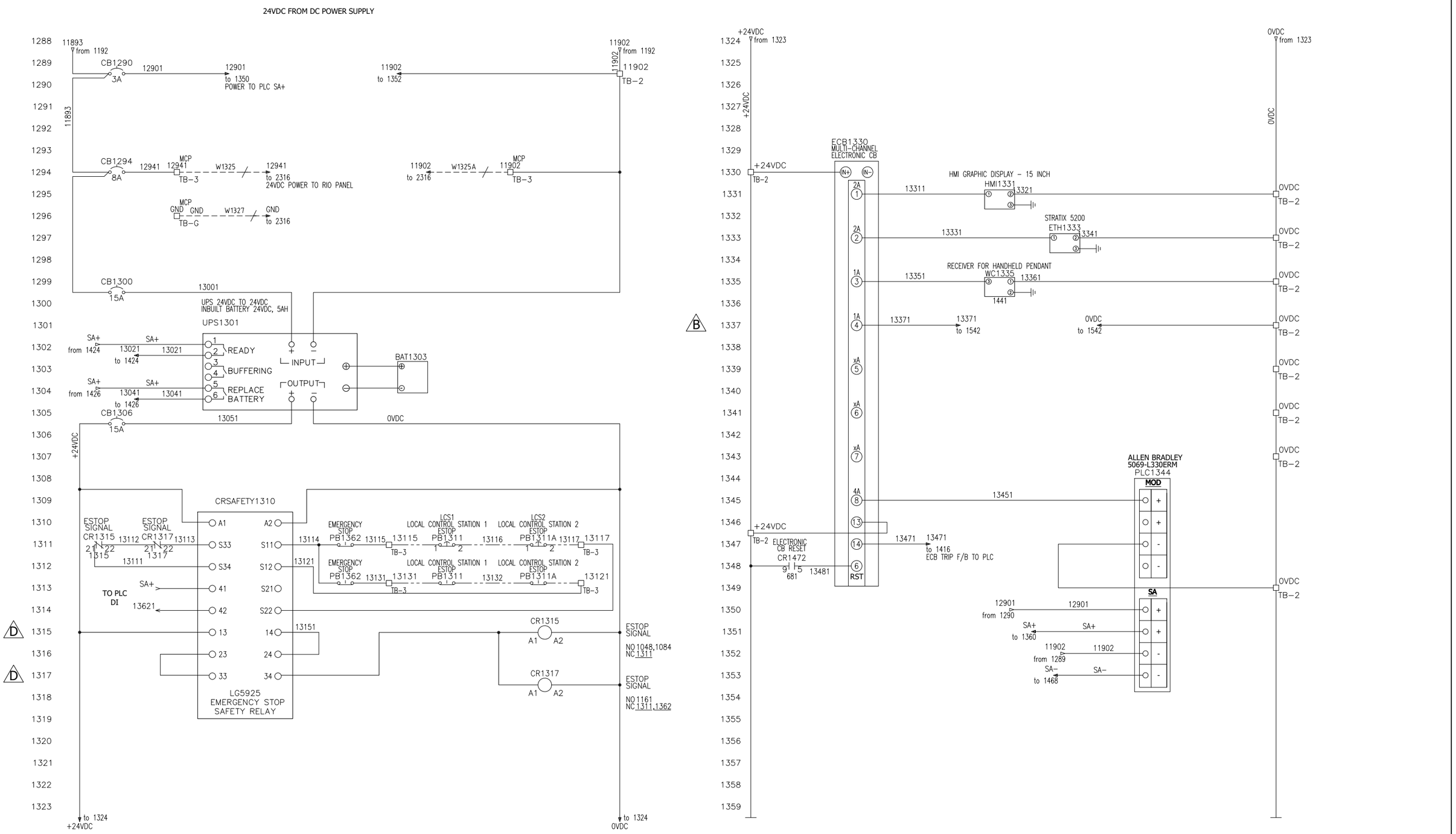
24VDC FROM DC POWER SUPPLY
11893 from 1192
CB1290 3A
12901
12901 to 1350 POWER TO PLC SA+
11902 to 1352
11902 from 1192
11902 TB-2
CB1294 8A
12941
MCP 12941 TB-3
W1325
12941 to 2316 24VDC POWER TO RIO PANEL
11902 to 2316
W1325A
MCP 11902 TB-3
MCP GND GND TB-G
W1327
GND to 2316
CB1300 15A
13001
UPS 24VDC TO 24VDC INBUILT BATTERY 24VDC, 5AH
UPS1301
SA+ from 1424
13021
13021 to 1424
READY
BUFFERING
SA+ from 1426
13041
13041 to 1426
REPLACE BATTERY
INPUT
OUTPUT
BAT1303
CB1306 15A
13051
0VDC
+24VDC
CRSAFETY1310
ESTOP SIGNAL CR1315
13112
ESTOP SIGNAL CR1317
13113
13111
TO PLC DI
SA+
13621
EMERGENCY STOP PB1362
13114
13115
LCS1 LOCAL CONTROL STATION 1 ESTOP PB1311
13116
LCS2 LOCAL CONTROL STATION 2 ESTOP PB1311A
13117
TB-3
13121
13131
13132
13151
LG5925 EMERGENCY STOP SAFETY RELAY
CR1315
CR1317
ESTOP SIGNAL
NO 1048,1084
NC 1311
NO 1161
NC 1311,1362
to 1324 +24VDC
to 1324 0VDC
+24VDC from 1323
0VDC from 1323
ECB1330 MULTI-CHANNEL ELECTRONIC CB
+24VDC TB-2
HMI GRAPHIC DISPLAY - 15 INCH
HMI1331
13311
13321
STRATIX 5200 ETH1333
13331
13341
RECEIVER FOR HANDHELD PENDANT WC1335
13351
13361
1441
13371
13371 to 1542
0VDC to 1542
0VDC TB-2
ALLEN BRADLEY 5069-L330ERM PLC1344
MOD
13451
ELECTRONIC CB RESET CR1472
681
13481
13471
13471 to 1416 ECB TRIP F/B TO PLC
RST
SA
12901 from 1290
SA+ to 1360
11902 from 1289
SA- to 1468
SIZE SHEET (DO NOT SCALE PRINTS)
THIRD ANGLE PROJECTION
© 2020 OVIVO. ALL RIGHTS RESERVED.
WORKMANSHIP STANDARD EB9001 APPLIES
OVIVO
THIS DRAWING CONTAINS CONFIDENTIAL PROPRIETARY INFORMATION OF OVIVO AND ITS AFFILIATES AND IS NOT TO BE DISCLOSED NOR TO BE USED EXCEPT FOR EVALUATING PROPOSALS OF OVIVO OR INSTALLING, OPERATING OR MAINTAINING OVIVO EQUIPMENT UNLESS OTHERWISE AUTHORIZED IN WRITING BY OVIVO. UNCONTROLLED COPY IF PRINTED.
DWG NO.
CSW1807-121
14 of 21
D
REVISION

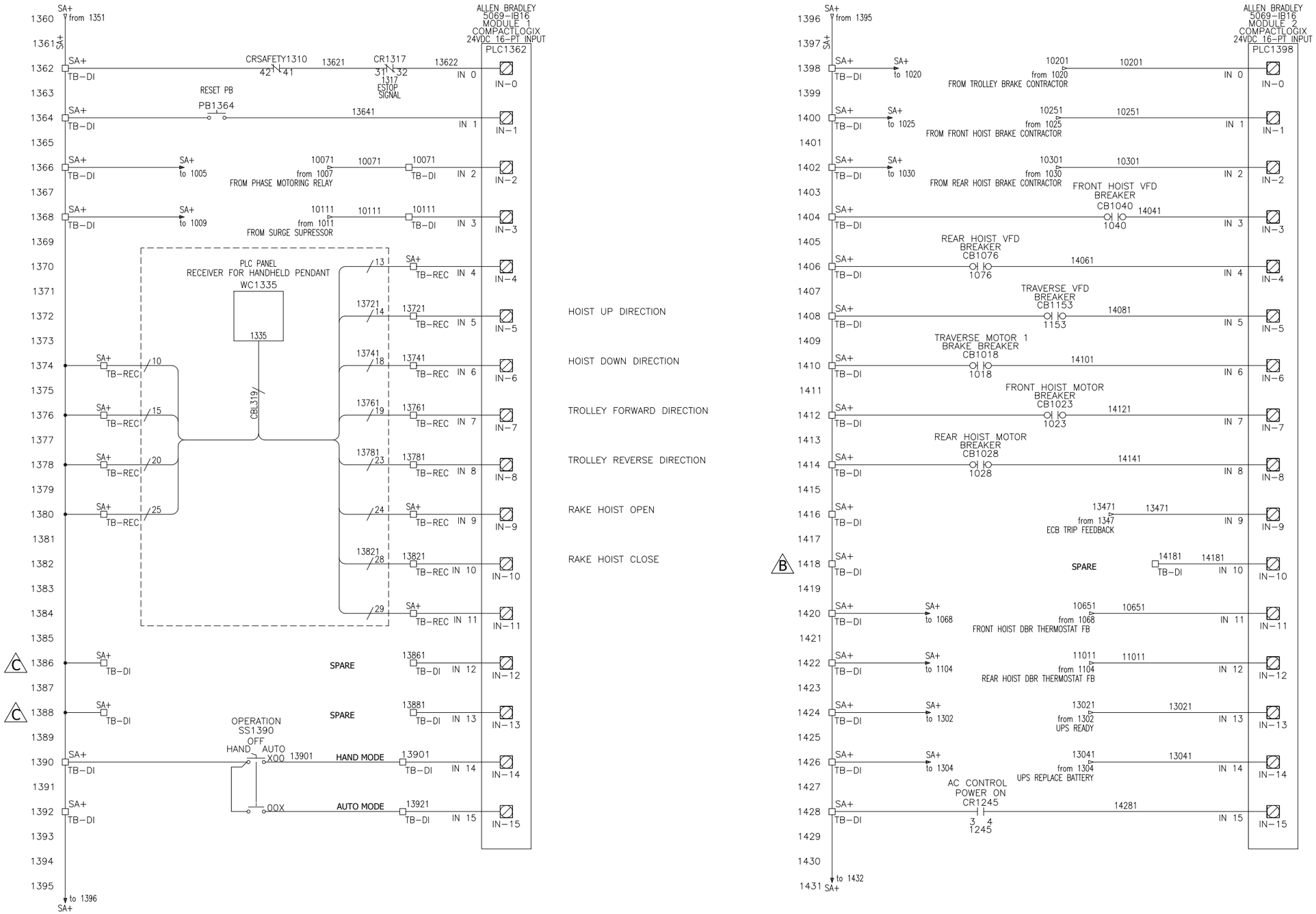

THIS DRAWING CONTAINS CONFIDENTIAL PROPRIETARY INFORMATION OF OVIVO AND ITS AFFILIATES AND IS NOT TO BE DISCLOSED NOR TO BE USED EXCEPT FOR EVALUATING PROPOSALS OF OVIVO OR INSTALLING, OPERATING OR MAINTAINING OVIVO EQUIPMENT UNLESS OTHERWISE AUTHORIZED IN WRITING BY OVIVO. UNCONTROLLED COPY IF PRINTED.

SIZE SHEET (DO NOT SCALE PRINTS)
THIRD ANGLE PROJECTION
© 2020 OVIVO. ALL RIGHTS RESERVED.
WORKMANSHIP STANDARD ES0001 APPLIES
OVIVO

DWG. NO. CSW1807-121

REVISION D

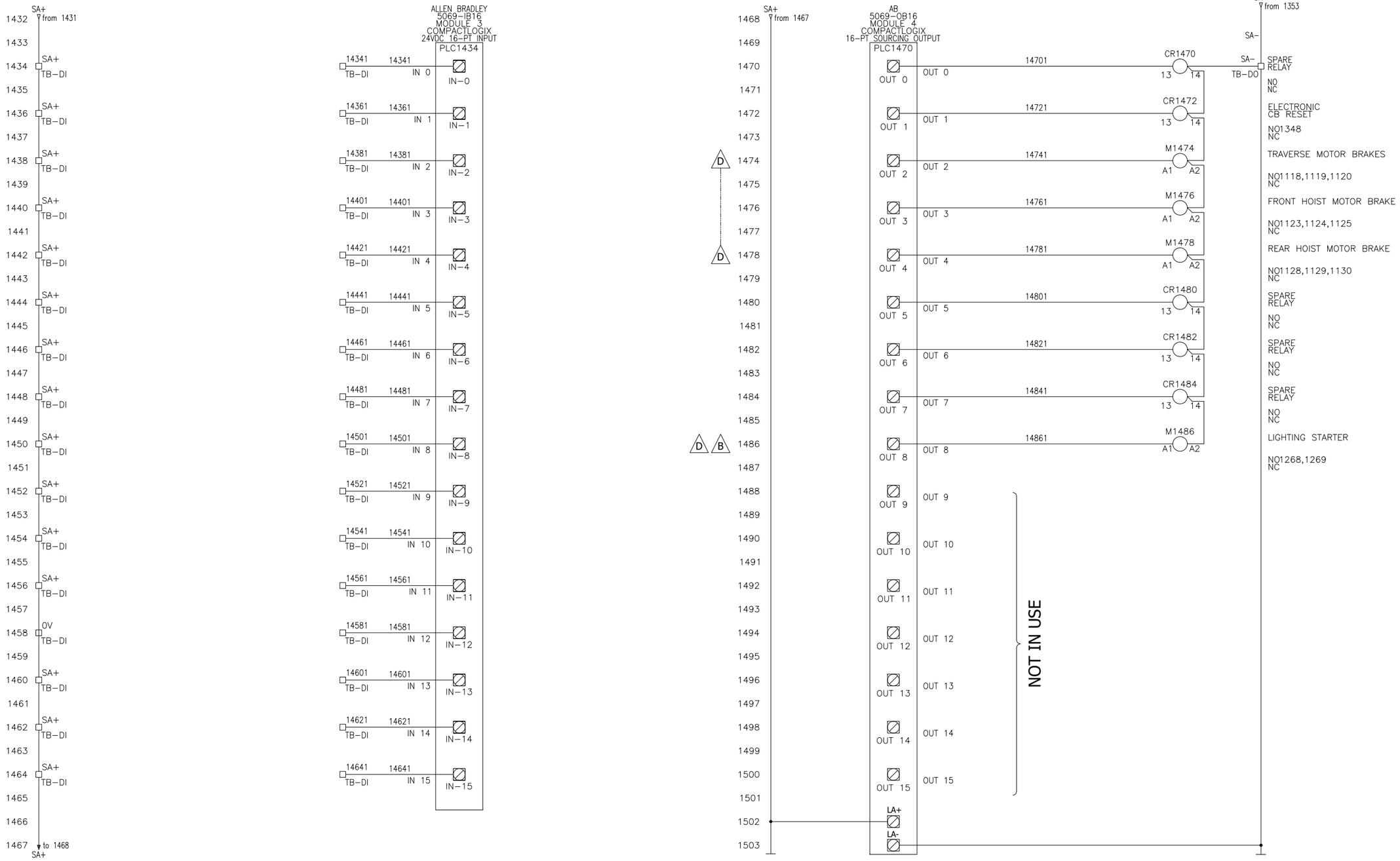

SIZE SHEET (DO NOT SCALE PRINTS) | THIRD ANGLE PROJECTION

© 2020 OVIVO. ALL RIGHTS RESERVED.

WORKMANSHIP STANDARD ES0001 APPLIES

OVIVO

THIS DRAWING CONTAINS CONFIDENTIAL PROPRIETARY INFORMATION OF OVIVO AND ITS AFFILIATES AND IS NOT TO BE DISCLOSED NOR TO BE USED EXCEPT FOR EVALUATING PROPOSALS OF OVIVO OR INSTALLING, OPERATING OR MAINTAINING OVIVO EQUIPMENT UNLESS OTHERWISE AUTHORIZED IN WRITING BY OVIVO. UNCONTROLLED COPY IF PRINTED.

DWG NO. CSW1807-121

REVISION D

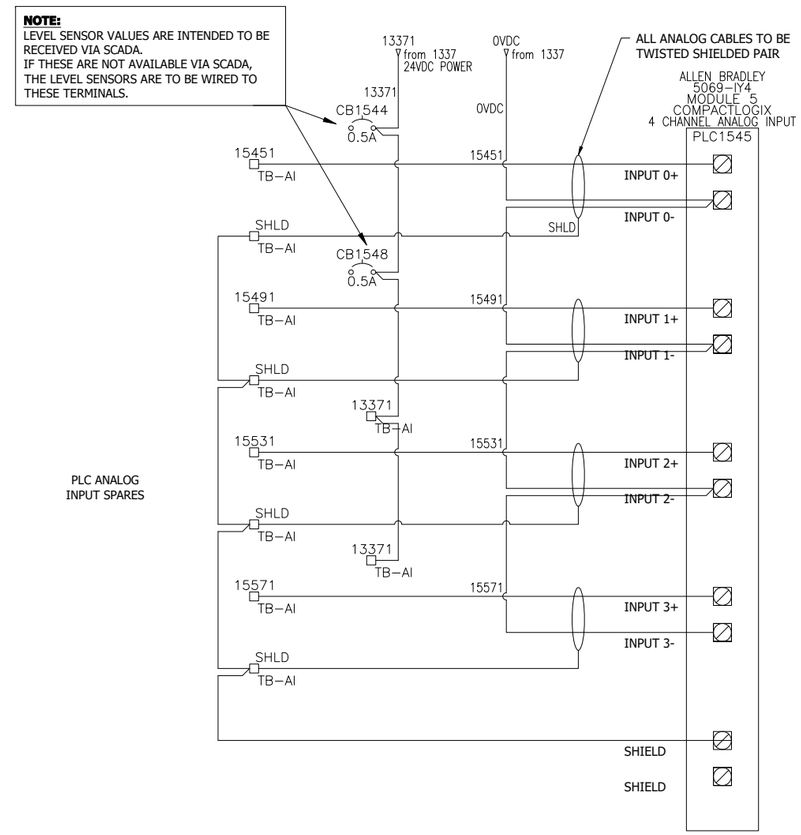

SIZE SHEET (DO NOT SCALE PRINTS)
THIRD ANGLE PROJECTION
© 2020 OVIVO. ALL RIGHTS RESERVED.
WORKMANSHIP STANDARD ES0001 APPLIES
OVIVO
THIS DRAWING CONTAINS CONFIDENTIAL PROPRIETARY INFORMATION OF OVIVO AND ITS AFFILIATES AND IS NOT TO BE DISCLOSED NOR TO BE USED EXCEPT FOR EVALUATING PROPOSALS OF OVIVO OR INSTALLING, OPERATING OR MAINTAINING OVIVO EQUIPMENT UNLESS OTHERWISE AUTHORIZED IN WRITING BY OVIVO. UNCONTROLLED COPY IF PRINTED.
DWG NO. CSW1807-121

D
REVISION

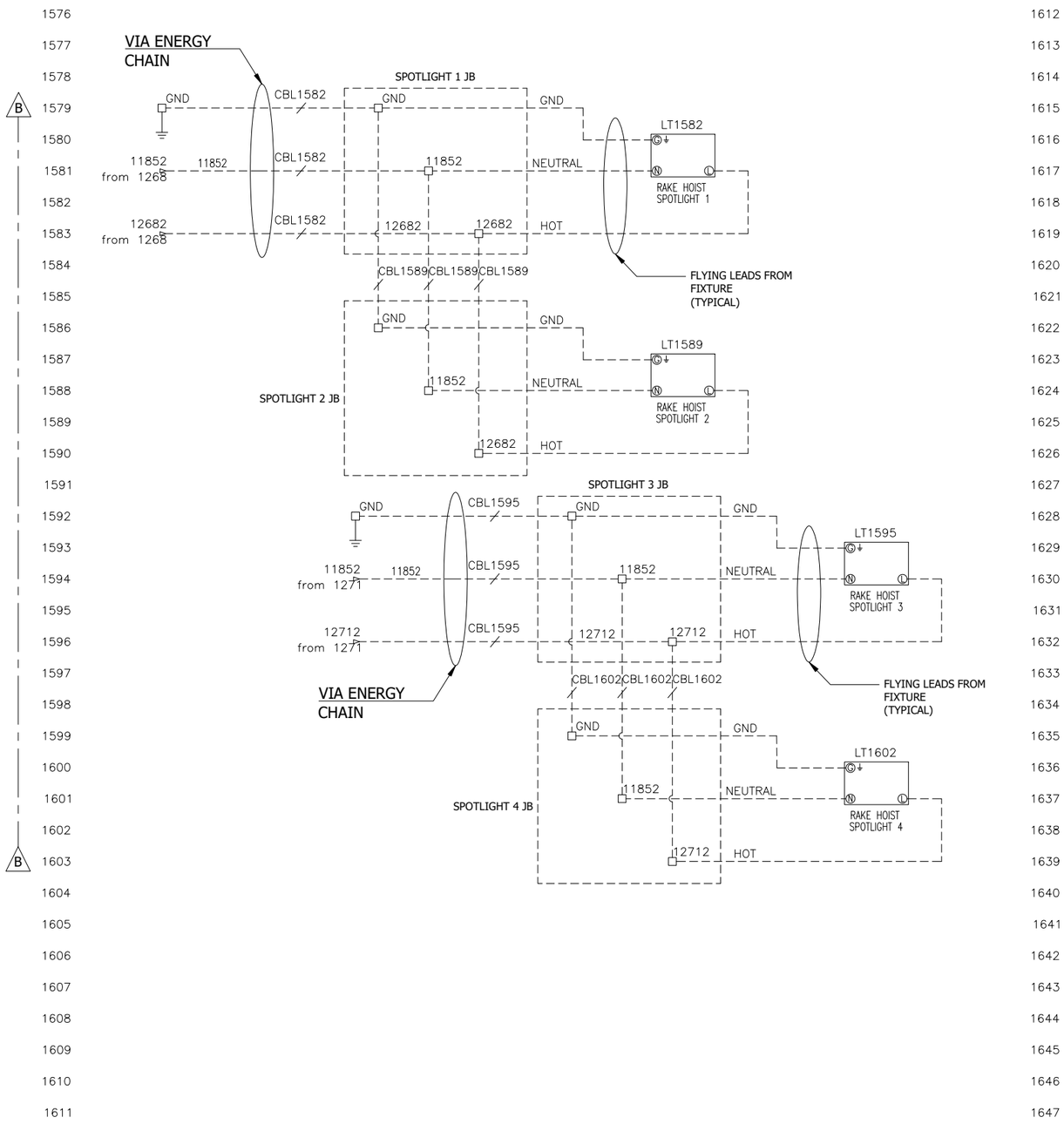

INTENTIONALLY LEFT BLANK

SIZE SHEET (DO NOT SCALE PRINTS)
THIRD ANGLE PROJECTION
© 2020 OVIVO. ALL RIGHTS RESERVED.
WORKMANSHIP STANDARD ES0001 APPLIES
THIS DRAWING CONTAINS CONFIDENTIAL PROPRIETARY INFORMATION OF OVIVO AND ITS AFFILIATES AND IS NOT TO BE DISCLOSED NOR TO BE USED EXCEPT FOR EVALUATING PROPOSALS OF OVIVO OR INSTALLING, OPERATING OR MAINTAINING OVIVO EQUIPMENT UNLESS OTHERWISE AUTHORIZED IN WRITING BY OVIVO. UNCONTROLLED COPY IF PRINTED.

INTENTIONALLY LEFT BLANK

SIZE SHEET
DO NOT SCALE PRINTS
THIRD ANGLE PROJECTION
© 2020 OVIVO.
ALL RIGHTS RESERVED.
WORKMANSHIP STANDARD ES0001 APPLIES
OVIVO
THIS DRAWING CONTAINS CONFIDENTIAL PROPRIETARY INFORMATION OF OVIVO AND ITS AFFILIATES AND IS NOT TO BE DISCLOSED NOR TO BE USED EXCEPT FOR EVALUATING PROPOSALS OF OVIVO OR INSTALLING, OPERATING OR MAINTAINING OVIVO EQUIPMENT UNLESS OTHERWISE AUTHORIZED IN WRITING BY OVIVO. UNCONTROLLED COPY IF PRINTED.
DWG NO. CSW1807-121

D
REVISION

INTENTIONALLY LEFT BLANK

SIZE SHEET
DO NOT SCALE PRINTS
THIRD ANGLE PROJECTION
© 2020 OVIVO.
ALL RIGHTS RESERVED.
WORKMANSHIP STANDARD ES0001 APPLIES
OVIVO
THIS DRAWING CONTAINS CONFIDENTIAL PROPRIETARY INFORMATION OF OVIVO AND ITS AFFILIATES AND IS NOT TO BE DISCLOSED NOR TO BE USED EXCEPT FOR EVALUATING PROPOSALS OF OVIVO OR INSTALLING, OPERATING OR MAINTAINING OVIVO EQUIPMENT UNLESS OTHERWISE AUTHORIZED IN WRITING BY OVIVO. UNCONTROLLED COPY IF PRINTED.
DWG NO. CSW1807-121

D
REVISION

INTENTIONALLY LEFT BLANK

SIZE SHEET DO NOT SCALE PRINTS
THIRD ANGLE PROJECTION
© 2020 OVIVO. ALL RIGHTS RESERVED.
WORKMANSHIP STANDARD ES0001 APPLIES
THIS DRAWING CONTAINS CONFIDENTIAL PROPRIETARY INFORMATION OF OVIVO AND ITS AFFILIATES AND IS NOT TO BE DISCLOSED NOR TO BE USED EXCEPT FOR EVALUATING PROPOSALS OF OVIVO OR INSTALLING, OPERATING OR MAINTAINING OVIVO EQUIPMENT UNLESS OTHERWISE AUTHORIZED IN WRITING BY OVIVO. UNCONTROLLED COPY IF PRINTED.