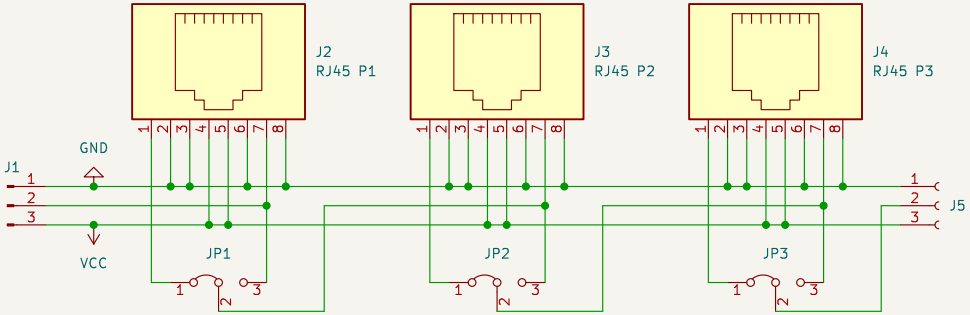

© CC-BY-SA 4.0

Jan Graichen

Sheet: /

File: ws2811-adapter.kicad_sch

Title: MGP Decoder adapter board to RJ45 loop

Size: A5	Date: 2023-12-20	**Rev: 2.0**
KiCad E.D.A. eeschema 7.0.10-7.0.10~ubuntu22.04.1		Id: 1/1