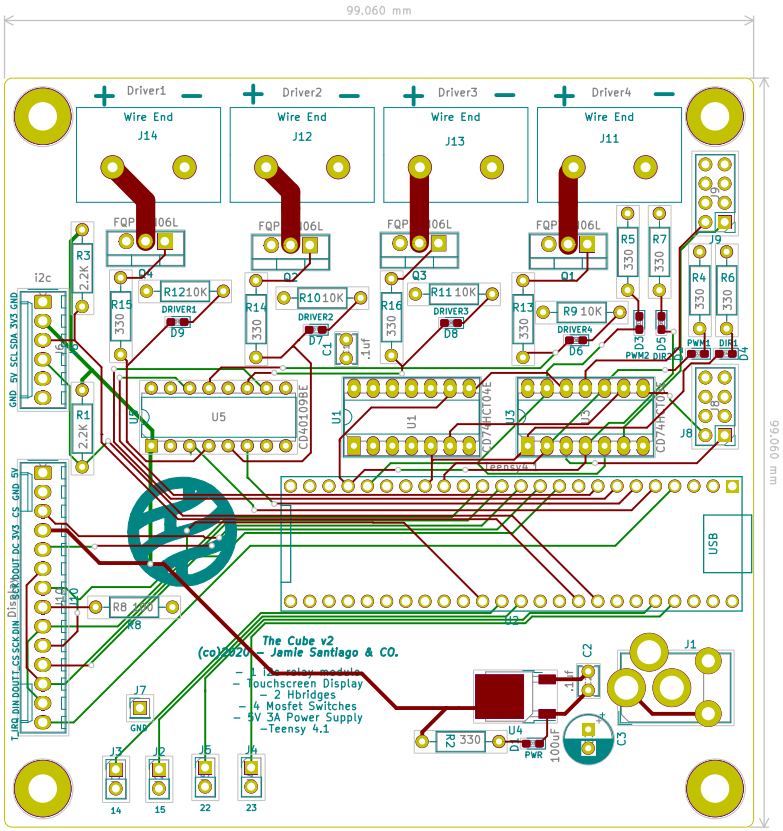


| | | |
|---|---|---|
| Sheet: File: Generic_Controller.kicad_pcb | | |
| Title: | | |
| Size: A4 | Date: | Rev: |
| KiCad E.D.A. kicad (5.1.6)-1 | | Id: 1/1 |