Team Name

LJCJ UR20

Timeline

Fall 2024 – Spring 2025

Students

- Luis Contreras – CPE
- Christopher Gonzalez– CSE
- Joshua Dominguez – CSE
- Jasper Gustafson – CPE

Sponsor

Dr. Christopher D. McMurrough

Abstract

Abstract text goes here

Background

This project explores the development and implementation of a palletizing application using a UR20 collaborative robot arm, designed to mimic a full-scale assembly line operation. The system integrates a conveyor belt that transports boxes to a designated stop point. A photoelectric sensor (photo-eye) monitors this stop point and halts the conveyor when the sensor beam is interrupted by an incoming box. The photo-eye is connected to a relay module, which controls the start/stop function of the conveyor belt. Once the conveyor is stopped, the UR20 robot arm is triggered to pick up the box and place it onto a pallet, following a predefined grid pattern to ensure organized and stable stacking. To prioritize safety in human-robot interaction, a safety scanner is implemented to monitor the surrounding area. The scanner automatically stops the robot's operation if a person enters the predefined safety zone. As an additional safety enhancement, a camera is mounted on the side of the system to monitor the scanner's

blind spot or "dead zone." This camera serves as a secondary emergency stop (E-stop) by detecting any human presence within this range and halting the robot's activity accordingly.

Project Requirements

- **PLC (Programmable Logic Controller):** Serves as the central interface between all system layers. Programmed using URScript. Handles key functions including sensor control and the palletizing algorithm.

- **Safety Sensor:** Detects human presence in the UR20 work zone using a safety laser scanner. Sends stop signals to the PLC to halt UR20 movement until the area is clear.

- **UR20 Robot Arm:** Composed of a robotic arm, vacuum gripper, and air compressor controller. Executes motion and gripper actions based on commands from the PLC.

- **Conveyor Belt System:** Motor-driven belt with two states: on or off. Equipped with a guide for box reorientation and a photo eye bracket.

- **Camera System (Dead Zone Monitoring):** Covers blind spots not visible to the safety scanner. Triggers an emergency stop when human presence is detected in the blind zone.

- **Photoelectric Sensor (Photo-eye):** Detects incoming boxes at the stop point of the conveyor. Connected to a relay module to control conveyor start/stop.

- **Vacuum Gripper:** Designed for reliable box pickup. Must meet safety requirements for use with the UR20 collaborative robot.

- **Solenoid for Air Valve:** Connected to the control box to manage vacuum gripper operations. Enables on/off control for box grabbing and releasing during palletizing.

- **Input Function Logic**: Built into the PLC, processes inputs from both the photo eye and safety systems. Directs flow to box offset and position algorithms accordingly.

- **Position and Offset Algorithms**: Determine motion path for the UR20 to place boxes accurately on the pallet.

Design Constraints

Laboratory equipment lockout/tagout (LOTO) procedure: Any fabrication equipment provided used in the development of the project shall be used in accordance with OSHA standard LOTO procedures. Locks and tags are installed on all equipment items that present use hazards, and ONLY the course instructor or designated teaching assistants may remove a lock. All locks will be immediately replaced once the equipment is no longer in use.Equipment usage, due to lock removal policies, will be limited to availability of the course instructor and designed teaching assistants.Occupational Safety and Health Standards 1910.147 - The control of hazardous energy (lockout/tagout).

National Electric Code (NEC) wiring compliance:Any electrical wiring must be completed in compliance with all requirements specified in the National Electric Code. This includes wire runs, insulation, grounding, enclosures, over-current protection, and all other specifications.High voltage power sources, as defined in NFPA 70, will be avoided as much as possible in order to minimize potential hazards.

RIA robotic manipulator safety standards:robotic manipulators, if used, will either housed in a compliant lockout cell with all required safety interlocks, or certified as a "collaborative" unit from the manufacturer.boratory policyCollaborative robotic manipulators will be preferred over non-collaborative units in order to minimize potential hazards. Sourcing and use of any required safety interlock mechanisms will be the responsibility of the engineering team.

American National Standard for Industrial Robots and Robot Systems: Collaborative robots remain dangerous, and collaborators entering the work area of a Co-bot shall adhere to specific safety requirements in order to prevent bodily

harm. The movement path of the collaborator(s) must be kept free of tripping or other movement hazards while the Cobot is powered on. A collaborator shall not enter the workspace with dangling jewelry, loose clothing, or long loose hair.Collaborator(s) must not enter the marked Cobot operating space while the Cobot is active.Those not adhering to the safety requirements listed in ISO/TS 15066 shall be prohibited from collaboration with the Cobot until adherence to the requirements resumes.

Collaborate robot workspace clearance requirements The collaborative robot workspace should be clear of hazards that could impede the movement of the collaborator(s) or the Cobot itself. The collaborative space of the Cobot, where humans are safe to interact, must be visibly delineated from the operating space of the Cobot.The Cobot shall function with reduced force when a human is present. In calculating these reduced forces, the weight of the payload must be considered. The workspace of the Cobot must be kept free of blockages or other movement hazards while the Cobot is powered on. Possible locations of quasi-static contact (where a human may be clamped between any part of the Cobot and the working environment, including another part of the Cobot) must be identified and removed where possible. Possible locations of transient contact (where the Cobot or the environment may collide with a human) must be identified and removed where possible. The force of contact should also be considered.

International Organization for Standardization Not all possible locations of contact will be removable. To account for this, dangerous areas must be delineated as part of the Cobot operating space. Risk of injury at these locations shall be minimized by calculating the reduced force used by the Cobot according to ISO 10218-1:2011.

Engineering Standards

All Senior Design projects may be subject to some of the below design constraints as applicable to the specific project. Discuss or elaborate upon any of the applicable constraints (minimum 5):
(These should be documented in the System Requirement Specification document)

- Authentication & Encryption/Security Standards

- Building Codes (ADA, County/City/Municipal, etc) (each counts as 1)
- Common Engineering Standards (IEEE, ISO, NEMA, NIST, etc) (each counts as 1)
- OSHA Compliance
- Programming/Web Dev Standards

System Overview

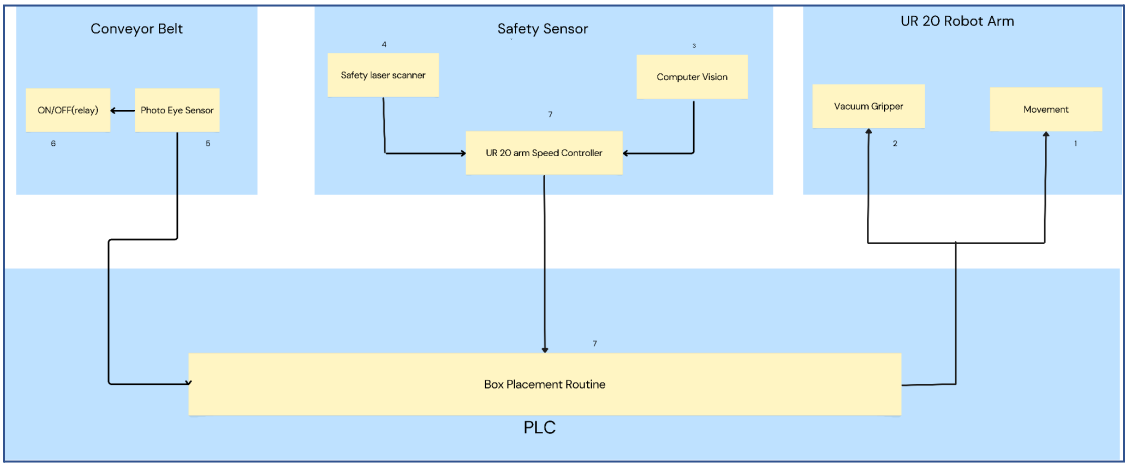

Results

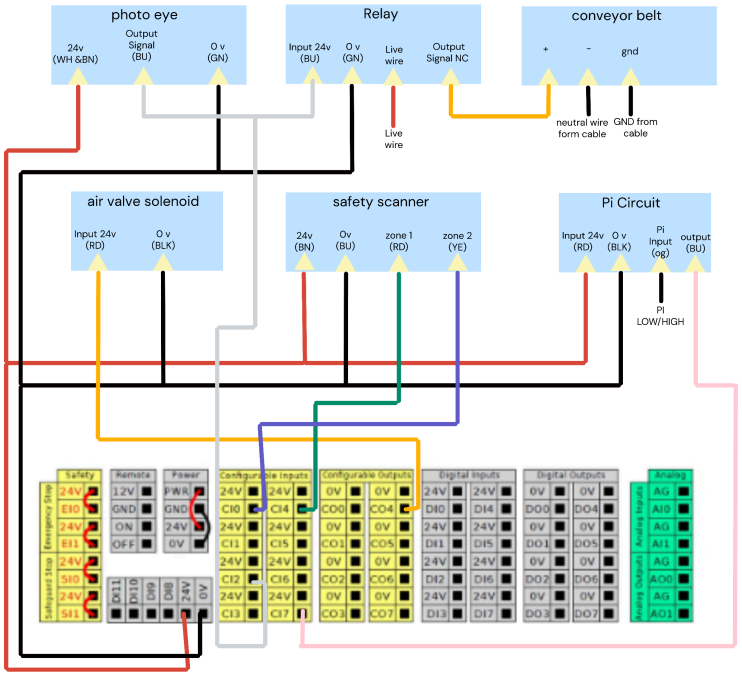
photo eye
24v (WH &BN)
Output Signal (BU)
O v (GN)
Relay
Input 24v (BU)
O v (GN)
Live wire
Output Signal NC
Live wire
conveyor belt
+
-
gnd
neutral wire form cable
GND from cable
air valve solenoid
Input 24v (RD)
O v (BLK)
safety scanner
24v (BN)
0v (BU)
zone 1 (RD)
zone 2 (YE)
Pi Circuit
Input 24v (RD)
O v (BLK)
Pi Input (og)
output (BU)
PI LOW/HIGH
Safety
Remote
Power
Configurable Inputs
Configurable Outputs
Digital Inputs
Digital Outputs
Analog
Emergency Stop
Safeguard Stop
Analog Inputs
Analog Outputs

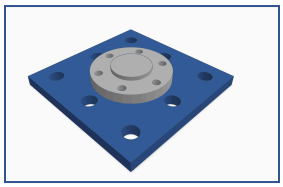

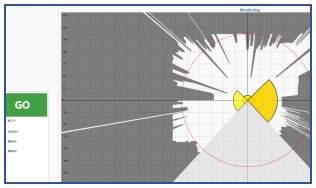
GO

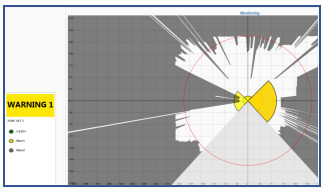
WARNING 1

Future Work

This project successfully demonstrates a functional palletizing application using a UR20 collaborative robot, integrating conveyor control,sensor-based automation, and layered safety mechanisms. The system effectively mimics a real-world assembly line, ensuring both operational efficiency and human safety. For future improvement, the current dead zone camera setup can be enhanced by repositioning it to a bird's-eye view, allowing for broader and more effective coverage of the safety scanners blind spot.improving the systems responsiveness to unexpected intrusions/additionally, addressing voltage interference issues from the Raspberry PI will be essential for ensuring consistency.

Project Files

Project Charter (link)
System Requirements Specification (link)
Architectural Design Specification (link)
Detailed Design Specification (link)
Poster (link)
Closeout Materials

Demo Video (link)

References

[1] Md Abdullah-Al-Noman, Anika Nawer Eva, Tabassum Binth Yeahyea, and Riasat Khan. Computer vision-based robotic arm for object color, shape, and size detection. Journal of Robotics and Control (JRC), 3, 2022.

[2] Yi Deng, Tao Zhou, Guojin Zhao, Kuihu Zhu, Zhaixin Xu, and Hai Liu. Energy saving planner model via differential evolutionary algorithm for bionic palletizing robot. Sensors, 22, 2022.

[3] Vehbi C. Gungor and Gerhard P. Hancke. Industrial wireless sensor networks: Challenges, design principles, and technical approaches. IEEE Transactions on Industrial Electronics, 56, 2009.

[4] Robotiq. Automated palletizing with robotiq palletizers, 2024.

[5] Junjie Xu, Long Xiao, Muquan Lin, and Xiaojing Tan. Application of fuzzy pid position control algorithm in motion control system design of palletizing robot. Security and Communication Networks, 2022, 2022.