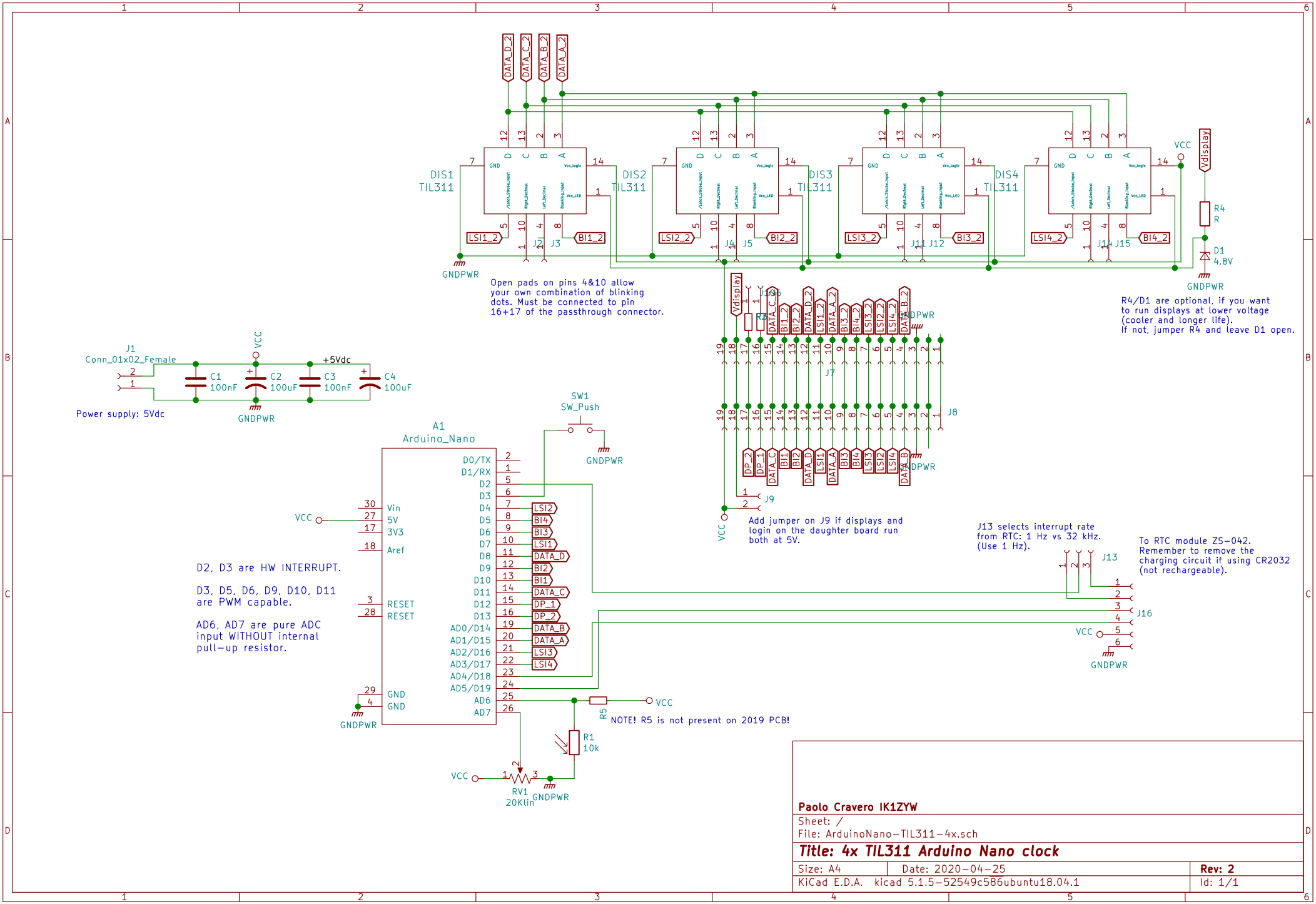

Paolo Cravero IK1ZYW

Sheet: /

File: ArduinoNano-TIL311-4x.sch

Title: 4x TIL311 Arduino Nano clock

Size: A4	Date: 2020-04-25	Rev: 2
KiCad E.D.A. kicad 5.1.5-52549c586ubuntu18.04.1		Id: 1/1