PIC32CM LE00/LS00/LS60

PIC32CM LE00/LS00/LS60 Curiosity Pro User Guide

Preface

The Microchip® PIC32CM LE00, PIC32CM LS00, and PIC32CM LS60 Curiosity Pro evaluation kits are hardware platforms for evaluating the PIC32CM LE00/LS00/LS60 microcontrollers (MCUs). Each evaluation kit is supported by the MPLAB® X Integrated Development Environment (IDE) and MPLAB Harmony v3 featuring application examples.

The Curiosity Pro evaluation kits include an on-board embedded debugger to program or debug the target microcontroller. This enables an easy start to a project, and provides application examples that can be used in the design of a custom application.

The Curiosity Pro evaluation kits provide easy access to the features of the microcontroller, and are integrated with Arduino Uno, mikroBUS™, and extension headers to interface with Xplained Pro extension boards for a rapid prototyping and expanded functionality.

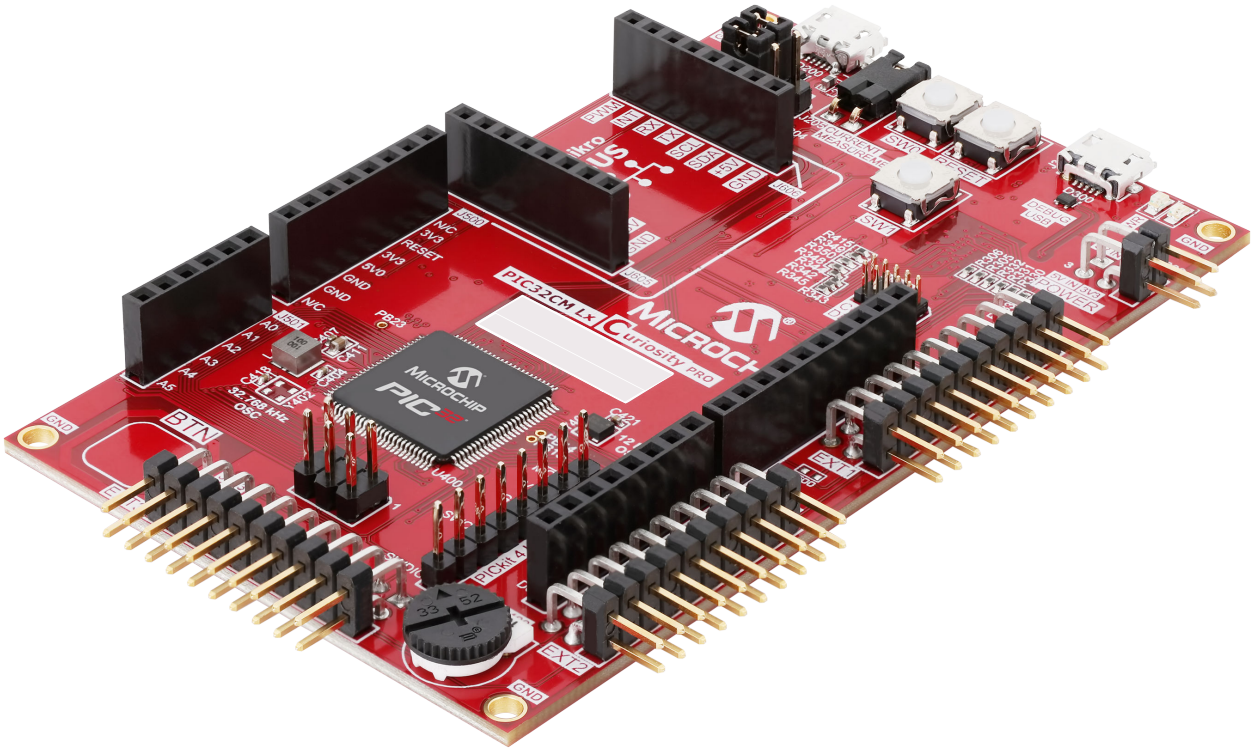

Table of Contents

Preface....1

1. Introduction....3
   - 1.1. Features....3
   - 1.2. Overview of Available Kits....3

2. Getting Started....7

3. Curiosity Pro....8
   - 3.1. Embedded Debugger....8
   - 3.2. Curiosity Pro Embedded Current Measurement Circuitry (XAM)....9

4. Hardware User Guide....11
   - 4.1. Power Sources....11
   - 4.2. Headers and Connectors....12
   - 4.3. Peripherals....20
   - 4.4. Embedded Debugger Implementation....22
   - 4.5. Embedded Current Measurement Circuitry (XAM) Configuration....24

5. Product Identifier and Revision....25

6. Revision History....26

The Microchip Website....27

Product Change Notification Service....27

Customer Support....27

Microchip Devices Code Protection Feature....27

Legal Notice....27

Trademarks....28

Quality Management System....28

Worldwide Sales and Service....29

1. Introduction

1.1 Features

The following are key features of the board:

- PIC32CM5164LE00100, PIC32CM5164LS00100, and PIC32CM5164LS60100 microcontrollers
- One mechanical reset button
- Two mechanical programmable buttons
- Two user LEDs (green and red)
- One Touch button
- One Potentiometer
- 32.768 kHz oscillator
- 12 MHz oscillator
- USB interface, Host or Device
- Three extension headers compatible with a wide range of Xplained Pro extension kits
- mikroBUS header connector
- Arduino Uno header connectors
- 10-pin Cortex® Debug header (SWD)
- 8-pin PICkit 4 Interface header (SWD)
- Embedded debugger (EDBG)
  - Auto ID for board identification in MPLAB X IDE
  - One status LED (yellow)
  - One board power LED (green)
  - Symbolic debug of complex data types, including scope information
  - Programming and debugging, including power measurements
  - Data Gateway Interface: SPI, I^2C, four GPIOs
  - Virtual COM port (CDC)
- Embedded current measurement circuitry (XAM) with MPLAB Data Visualizer support for data visualization
- USB powered
- Power Header for external power source
- Supported with application examples in MPLAB Harmony v3

1.2 Overview of Available Kits

The following are part numbers of the three evaluation kits:

- PIC32CM LE00 Curiosity Pro – EV80P12A
- PIC32CM LS00 Curiosity Pro – EV12U44A
- PIC32CM LS60 Curiosity Pro – EV76R77A

The evaluation kit offers a set of features that enables the user to start with the microcontroller peripherals immediately and to obtain an understanding of how to integrate the device in their design.

© 2022 Microchip Technology Inc.
and its subsidiaries

Figure 1-1. PIC32CM LE00/LS00/LS60 Curiosity Pro Evaluation Board Layout (Top View)

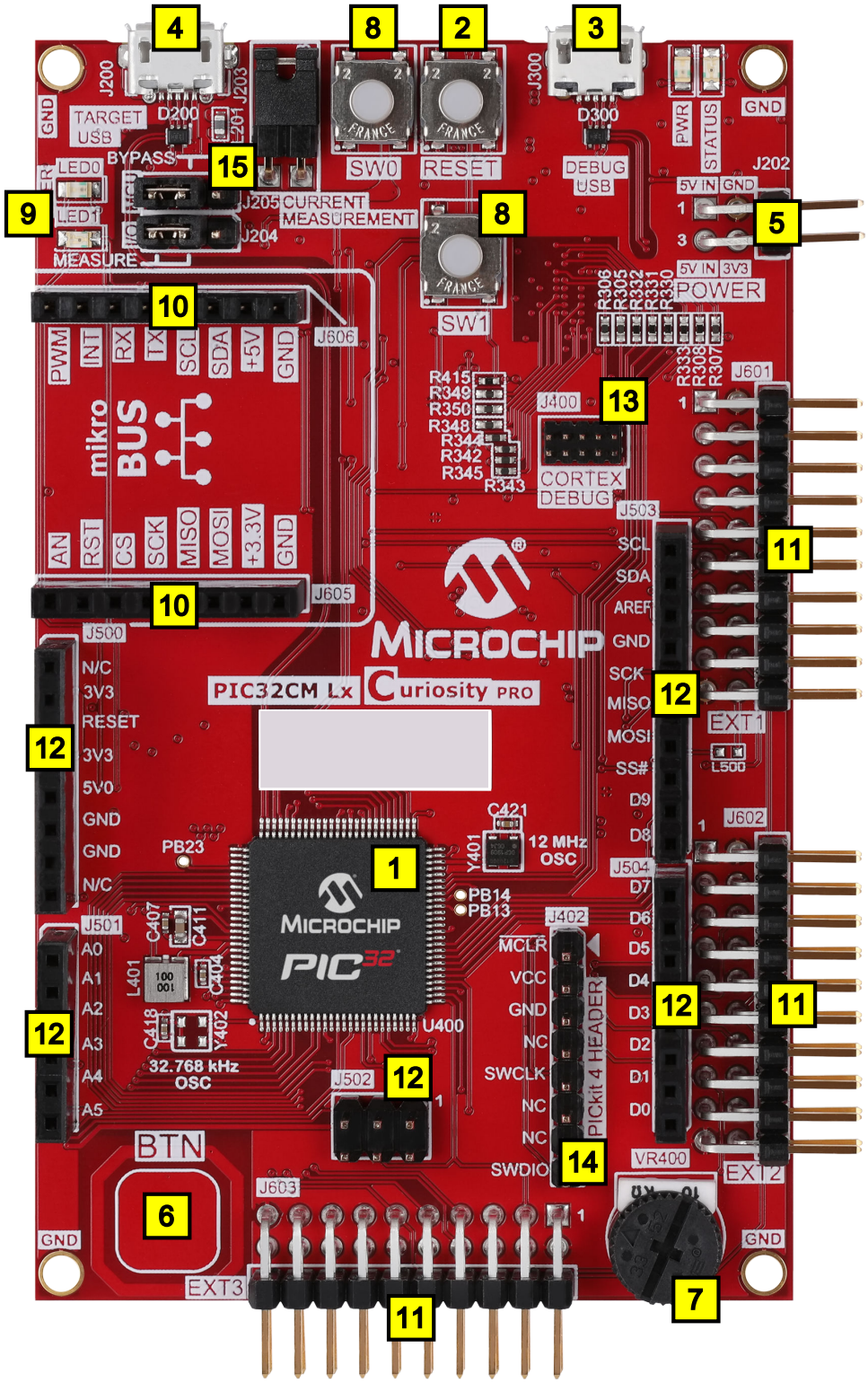

Figure 1-2. PIC32CM LE00/LS00/LS60 Curiosity Pro Evaluation Board Layout (Bottom View)

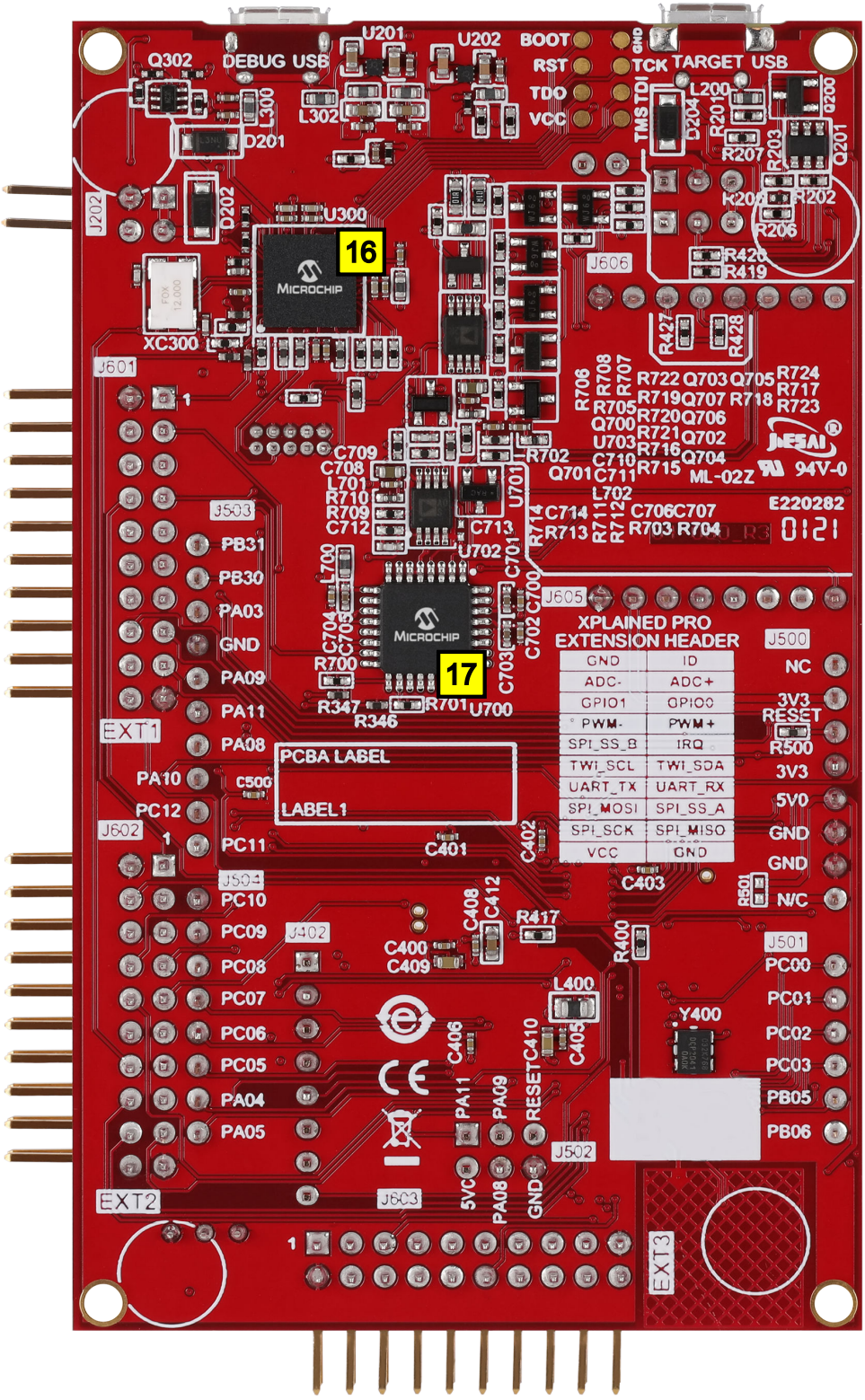

Table 1-1. PIC32CM LE00/LS00/LS60 Curiosity Pro Board Features and Location

Number	Item Description
1	PIC32CM LE00/LS00/LS60
2	Reset button
3	EDBG USB power supply
4	USB interface, Host and device
5	Power Header for external power source
6	Touch button
7	Potentiometer
8	Programmable buttons
9	User LEDs (Green and Red)
10	mikroBUS header connector
11	Extension headers
12	Arduino Uno header connectors
13	10-pin Cortex Debug header (SWD)
14	8-pin PICkit™ 4 Interface header (SWD)
15	Embedded Current Measurement jumpers
16	Embedded Debugger (EDBG)
17	Embedded Current Measurement (XAM)

Table 1-2. PIC32CM LE00/LS00/LS60 Microchip Total System Solutions (TSS)

TSS Components	Quantity (per board)	Function
PIC32CM5164LE00100-I/PF PIC32CM5164LS00100-I/PF PIC32CM5164LS60100-I/PF-PROTO	1(1)	Target MCU
DSC6083CE2A-032K768	1	External 32.768 kHz Oscillator
DSC6003JI2B-012.0000	1	External 12 MHz Oscillator
MIC5528-3.3YMT-T5	2	LDO for 3.3V DC Output
AT32UC3A4256J-C1UR	1	Embedded Debugger (EDBG) MCU
ATSAMD20E17A-AUT	1	Current Measurement (XAM) MCU

Note:

1. Only one target MCU per kit.

2. Getting Started

Follow these steps to explore the Curiosity Pro platform:

1. Download MPLAB X IDE.
2. Launch MPLAB X IDE.
3. Connect the DEBUG USB port on the kit to the computer using a USB cable (Standard-A to Micro-B, or Micro-AB).

Note: When the Curiosity Pro MCU kit is connected to the computer for the first time, the operating system will install the software driver. The software driver supports both 32-bit and 64-bit versions of Microsoft® Windows®XP, Windows Vista®, Windows 7, Windows 8, and Windows 10.

When the Curiosity Pro MCU board is powered, the power LED (green) will glow and MPLAB X IDE will auto-detect the specific Curiosity Pro MCU and extension boards that are connected to it. MPLAB X IDE will present relevant information, such as data sheets and kit documentation.

The PIC32CM LE00/LS00/LS60 devices can be programmed and debugged by the on-board embedded debugger (EDBG), hence external programmer or debugger tool is not required.

Note: Users can connect external debugger tools using the Cortex-M Debugger or the PICkit™ 4 Interface headers.

3. Curiosity Pro

The Curiosity Pro is a user-friendly rapid prototyping platform. It is supported with MPLAB X IDE and MPLAB Harmony v3 software development framework that comes with demonstration codes, middleware, PLIBs, and drivers.

The Curiosity Pro evaluation kits support a wide range of extension boards which are connected through a set of standardized headers and connectors. Each extension board has an identification (ID) chip to uniquely identify which boards are connected to the Curiosity Pro evaluation kit. When an extension board is connected, some relevant information, such as board features, supported interfaces, serial number, links to documentation, and so on is read and displayed on the MPLAB X IDE kit window.

3.1 Embedded Debugger

The Curiosity Pro contains Embedded Debugger (EDBG) for on-board debugging. The EDBG is a USB composite device with the following interfaces:

- Debugger (SWD)
- Virtual COM port (CDC)
- Data gateway interface (DGI)

Together with MPLAB X IDE the EDBG debugger interface can program and debug the microcontroller. On the PIC32CM LE00/LS00/LS60 Curiosity Pro, the SWD interface is connected between the EDBG and the microcontroller.

The virtual COM Port is connected to a UART on the microcontroller and provides a straight forward way to communicate with the target application through terminal software. It offers variable baud rate, parity, and stop bit settings. The settings on the microcontroller must match the settings given in the terminal software.

Note: The virtual COM port in the EDBG requires the terminal software to set the data terminal ready (DTR) signal to enable the UART pins connected to the microcontroller. If the DTR signal is not enabled, the UART pins on the EDBG is kept in High-Z (tristate), rendering the COM port unusable. The DTR signal is set automatically by some terminal software, but it must be manually enabled in the terminal.

The DGI consists of several physical interfaces for communication with the Host computer. Communication over the interfaces is bidirectional. It can be used to send events and values from the microcontroller or as a generic *printf*-style data channel. Traffic over the interfaces can be time stamped on the EDBG for accurate tracing of events. Timestamping imposes an overhead that reduces maximum throughput. The MPLAB Data Visualizer Extension, installed with MPLAB X IDE, is used to send and receive data through the DGI.

The EDBG controls two LEDs on the PIC32CM LE00/LS00/LS60 Curiosity Pro: a power LED and a status LED. The following table provides how the LEDs are controlled in different operation modes.

Table 3-1. EDBG LED Control

Operation Mode	Power LED	Status LED
Normal Operation	Power LED is lit when power is applied to the board.	Activity indicator, LED flashes when any communication happens to the EDBG.
Bootloader Mode (idle)	The power LED and the status LED blink simultaneously.	
Bootloader Mode (firmware upgrade)	The power LED and the status LED blink in an alternating pattern.	

For additional information on EDBG, refer to the Microchip EDBG User Guide.

3.2 Curiosity Pro Embedded Current Measurement Circuitry (XAM)

3.2.1 Overview

The Curiosity Pro Embedded Current Measurement Circuitry (XAM) extends the embedded debugger with high dynamic range current measurement, and this enables the power profiling of the target system.

Figure 3-1. Curiosity Pro Embedded Current Measurement Circuitry (XAM)

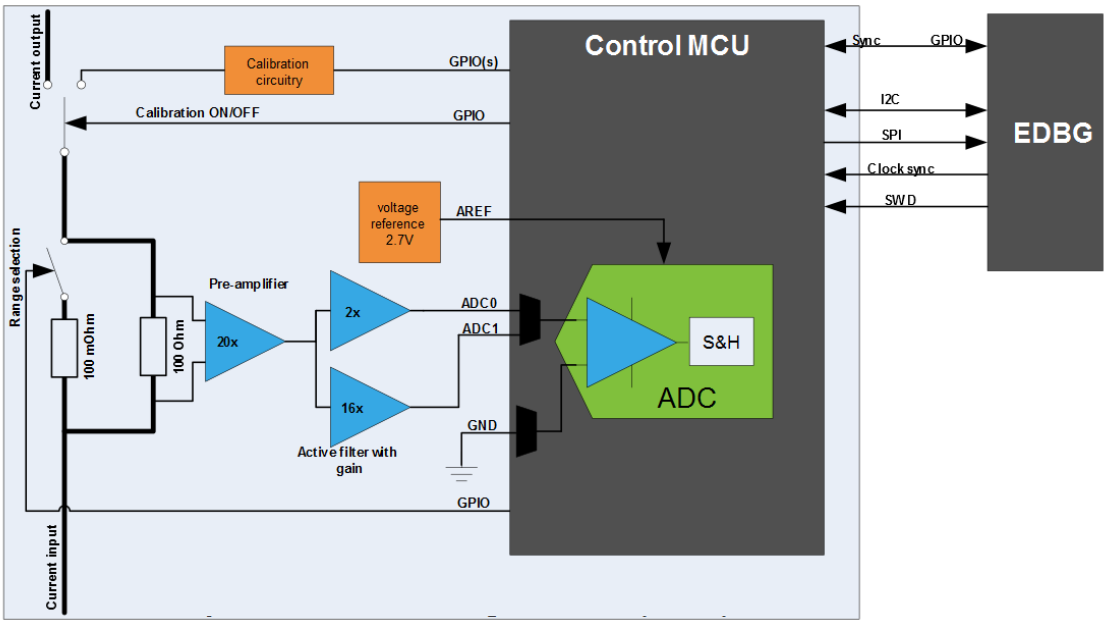

The following are key features of the XAM:

- Calibration circuitry
- Voltage reference
- Analog front end
  - Shunt resistors with a range selection switch
  - Preamplifier
  - Two active filters with gain
- Control MCU
  - Analog-to-Digital Converter (ADC)
  - Signal processing
  - Control or communication interface to the EDBG

The current measurement front end is a high-side shunt measurement with a preamplifier, and a second active filter stage with gain. The wide dynamic range is achieved by four measurement ranges which are defined by two shunts, and the two parallel second stage active filters with gain.

3.2.2 EDBG Interface

The Curiosity Pro Embedded Current Measurement Circuitry (XAM) is connected to the EDBG with the following interfaces:

- I^2C: Used to control and configure the XAM.
- SPI: Current measurement data is streamed to the EDBG through this interface. This is a one-way data transfer channel from the XAM to the EDBG.
- SWD: The MCU in the XAM is programmed through SWD from the EDBG.
- GPIO: At least one GPIO that is connected to the EDBG from the target MCU is also connected to the current measurement unit to enable the user to sync current measurements with their application.

- Clock sync: Synchronization signal to synchronize ADC measurements with EDBG.

3.2.3 Measurement Ranges and Accuracy

The XAM has the following four measurement ranges, which are defined by two shunt resistors and two gain stages as provided in the table below:

Table 3-2. XAM Measurement Ranges and Accuracy

Measurement Range	Hardware	Resolution	Accuracy	Comments
Range 1	Low-current shunt and high-gain stage	20 nA	1 LSB ±1%	Below 1 µA the error will increase. Typical error for 300 nA is 1 LSB ±10%
Range 2	Low-current shunt and low-gain stage	150 nA	1 LSB ±1%	-
Range 3	High-current shunt and high-gain stage	10 µA	1 LSB ±1%	-
Range 4	High current shunt and low gain stage	100 µA	1 LSB ±1%	Above 100 mA the error will increase to 1 LSB ±5% at 400 mA. Maximum current is 400 mA

The ranges are switched automatically by the XAM to achieve best measurement results and the current active range is visualized in the MPLAB Data Visualizer front end tool. The maximum voltage drops over the shunt resistor is 100 mV, and the XAM will switch the range automatically before this limit is reached.

4. Hardware User Guide

4.1 Power Sources

The PIC32CM LE00/LS00/LS60 Curiosity Pro can be powered by several power sources:

- EDBG USB
- Target USB
- External power

The following table provides power input requirements.

Table 4-1. Power Sources for PIC32CM LE00/LS00/LS60 Curiosity Pro

Power Input	Voltage Requirements	Current Requirements	Silkscreen Text
EDBG USB	4.4V to 5.25V (according to USB specifications).	500 mA (according to USB specifications).	DEBUG USB
Target USB	4.4V to 5.25V (according to USB specifications).	500 mA (according to USB specifications).	TARGET USB
External Power	4.3V to 5.5V if a USB Host operation is not required. 5V ±2% (±100 mV) for USB Host operation.	In USB Host applications, a minimum of 1A is recommended to supply the kit and the USB device. Recommended maximum is 2A.	POWER

Note: External power is required when 500 mA from a USB connector is not enough to power the board with possible extension boards. The connected USB device in a USB Host application might exceed this limit.

The evaluation kit has the following on-board 3.3V voltage regulators:

- One for the Embedded Debugger (EDBG) and the Embedded Current Measurement Circuitry (XAM)
- One for the MCU and other on-board peripherals

Figure 4-1. Power Supply Block Diagram

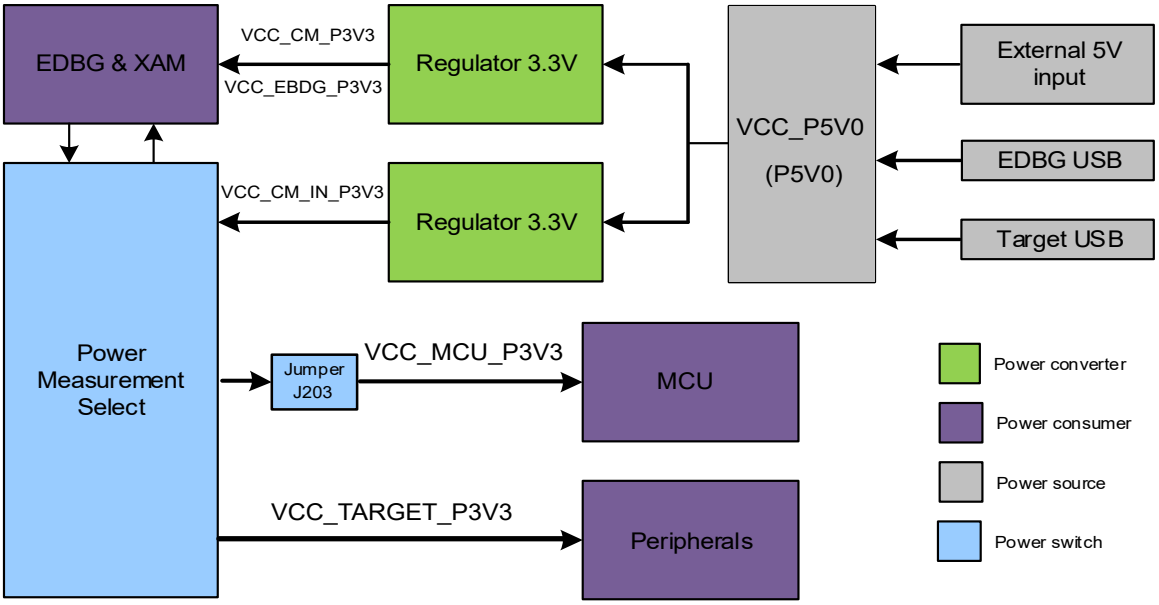

4.2 Headers and Connectors

The following sections describe the implementation of different headers and connectors on the PIC32CM LE00/LS00/LS60 Curiosity Pro and their connections to the PIC32CM LE00/LS00/LS60 microcontroller.

The tables in the following sections describe which signals are shared between the headers and on-board functionality.

4.2.1 Curiosity Pro Power Header

The power header (POWER) can be used to connect external 5V power to the PIC32CM LE00/LS00/LS60 Curiosity Pro evaluation kit.

The power header can also be used as a supply for external peripherals or extension boards. Care must be taken not to exceed the total current limitation of the on-board regulator when using the 3.3V pin.

Table 4-2. Curiosity Pro Power Header (J202)

Pin Number	Pin Name	Function	Pin Description
1	5V IN	VCC_EXT_P5V0	External 5V input
2	GND	GND	Ground
3	5V IN	VCC_EXT_P5V0	External 5V input
4	3V3	VCC_TARGET_P3V3	Regulated 3.3V (output, used as main power supply for the kit)

4.2.2 Extension Headers

All Curiosity Pro evaluation kits have several dual rows, 20-pin, 100 mil extension headers (with a pitch of 2.54 mm), which can be used to connect to a variety of Xplained Pro extension boards, or to access the pins of the target.

The Curiosity Pro evaluation kits have male headers and the extension boards have their female counterparts. All pins are not always connected, and the connected pins follow the defined pin-out descriptions given in the following table.

Table 4-3. Extension Header

Pin Number	Pin Name	Pin Description
1	ID_EXTx	Communication line to the ID chip on an extension board EXTx
2	GND	Ground
3	ADC(+)	Analog-to-Digital Converter (ADC) alternatively positive part of differential ADC
4	ADC(-)	ADC alternatively negative part of differential ADC
5	GPIO	General purpose I/O
6	GPIO	General purpose I/O
7	PWM(+)	Pulse-Width Modulator (PWM) alternatively positive part of differential PWM
8	PWM(-)	PWM alternatively negative part of differential PWM
9	IRQ/GPIO	Interrupt Request Line and general purpose I/O
10	SPI_SS_B/GPIO	SPI Select and general purpose I/O
11	TWI_SDA	Data line for I²C interface
12	TWI_SCL	Clock line for I²C interface
13	UART_RX	Receiver line of target device UART
14	UART_TX	Transmitter line of target device UART

© 2022 Microchip Technology Inc.
and its subsidiaries

.....continued

Pin Number	Pin Name	Pin Description
15	SPI_SS_A	SPI Select. Must preferably be unique.
16	SPI_MOSI	Host out Client in line of serial peripheral interface
17	SPI_MISO	Host in Client out line of serial peripheral interface
18	SPI_SCK	Clock for SPI. Always implemented, bus type.
19	GND	Ground
20	VCC	Power for extension board

The PIC32CM LE00/LS00/LS60 extension headers, EXT1, EXT2 and EXT3, offer access to the I/O of the microcontroller to expand the board by connecting extensions. These headers are based on the standard extension header and are specified in the following tables.

Table 4-4. Extension Header EXT1 (J601)

EXT1 Pin	MCU Pin	Function	Shared Functionality
1 [ID]	-	ID_EXT1	Communication line to the ID Chip on the extension board
2 [GND]	-	GND	Ground
3 [ADC(+)]	PA02	ADC/AIN[0]	mikroBUS
4 [ADC(-)]	PA03	ADC/AIN[1]	Arduino
5 [GPIO1]	PA10	GPIO	Arduino
6 [GPIO2]	PA11	GPIO	Arduino
7 [PWM(+)]	PB08	TC0/WO[0]	mikroBUS
8 [PWM(-)]	PB09	TC0/WO[1]	-
9 [IRQ/GPIO]	PB07	EIC/EXTINT[7] - GPIO	mikroBUS
10 [SPI_SS_B/GPIO]	PB04	GPIO	mikroBUS
11 [TWI_SDA]	PB30	SERCOM5/PAD[0] I²C SDA	EXT2, EXT3, mikroBUS, Arduino, EDBG DGI
12 [TWI_SCL]	PB31	SERCOM5/PAD[1] I²C SCL	EXT2, EXT3, mikroBUS, Arduino, EDBG DGI
13 [USART_RX]	PA23	SERCOM2/PAD[1] UART RX	mikroBUS
14 [USART_TX]	PA22	SERCOM2/PAD[0] UART TX	mikroBUS
15 [SPI_SS_A]	PB00	SERCOM3/PAD[2] SS_A	mikroBUS
16 [SPI_MOSI]	PB02	SERCOM3/PAD[0] MOSI	mikroBUS
17 [SPI_MISO]	PB01	SERCOM3/PAD[3] MISO	mikroBUS
18 [SPI_SCK]	PB03	SERCOM3/PAD[1] SCK	mikroBUS
19 [GND]	-	GND	Ground
20 [VCC]	-	VCC_TARGET_P3V3	Power for extension Board

© 2022 Microchip Technology Inc.
and its subsidiaries

Table 4-5. Extension Header EXT2 (J602)

EXT2 Pin	MCU Pin	Function	Shared Functionality
1 [ID]	-	ID_EXT2	Communication line to the ID Chip on the extension board
2 [GND]	-	GND	Ground
3 [ADC(+)]	PA05	ADC/AIN[3]	Arduino
4 [ADC(-)]	PA06	ADC/AIN[4]	-
5 [GPIO1]	PB05	GPIO	Arduino
6 [GPIO2]	PB06	GPIO	Arduino
7 [PWM(+)]	PB16	TC2/WO[0]	-
8 [PWM(-)]	PB17	TC2/WO[1]	-
9 [IRQ/GPIO]	PB15	EIC/EXTINT[15] - GPIO	-
10 [SPI_SS_B/GPIO]	PC26	GPIO	-
11 [TWI_SDA]	PB30	SERCOM5/PAD[0] I²C SDA	EXT1, EXT3, mikroBUS, Arduino, EDBG DGI
12 [TWI_SCL]	PB31	SERCOM5/PAD[1] I²C SCL	EXT1, EXT3, mikroBUS, Arduino, EDBG DGI
13 [USART_RX]	PB21	SERCOM3/PAD[1] UART RX	EDBG CDC
14 [USART_TX]	PB20	SERCOM3/PAD[0] UART TX	EDBG CDC
15 [SPI_SS_A]	PC24	SERCOM4/PAD[2] SS_A	EDBG DGI
16 [SPI_MOSI]	PB24	SERCOM4/PAD[0] MOSI	EDBG DGI
17 [SPI_MISO]	PC25	SERCOM4/PAD[3] MISO	EDBG DGI
18 [SPI_SCK]	PB25	SERCOM4/PAD[1] SCK	EDBG DGI
19 [GND]	-	GND	Ground
20 [VCC]	-	VCC_TARGET_P3V3	Power for extension Board

Table 4-6. Extension Header EXT3 (J603)

EXT3 Pin	MCU Pin	Function	Shared Functionality
1 [ID]	-	ID_EXT3	Communication line to the ID Chip on the extension board
2 [GND]	-	GND	Ground
3 [ADC(+)]	PA08	ADC/AIN[6]	Arduino
4 [ADC(-)]	PA09	ADC/AIN[7]	Arduino
5 [GPIO1]	PC17	GPIO	-
6 [GPIO2]	PC18	GPIO	-
7 [PWM(+)]	PB18	TCC0/WO[0]	-
8 [PWM(-)]	PB19	TCC0/WO[1]	-
9 [IRQ/GPIO]	PB22	EIC/EXTINT[6] - GPIO	-
10 [SPI_SS_B/GPIO]	PA15	GPIO	-
11 [TWI_SDA]	PB30	SERCOM5/PAD[0] I²C SDA	EXT1, EXT2, mikroBUS, Arduino, EDBG DGI

© 2022 Microchip Technology Inc.
and its subsidiaries

.....continued

EXT3 Pin	MCU Pin	Function	Shared Functionality
12 [TWI_SCL]	PB31	SERCOM5/PAD[1] I²C SCL	EXT1, EXT2, mikroBUS, Arduino, EDBG DGI
13 [USART_RX]	PA13	SERCOM4/PAD[1] UART RX	-
14 [USART_TX]	PA12	SERCOM4/PAD[0] UART TX	-
15 [SPI_SS_A]	PA18	SERCOM0/PAD[2] SS_A	-
16 [SPI_MOSI]	PA16	SERCOM0/PAD[0] MOSI	-
17 [SPI_MISO]	PA19	SERCOM0/PAD[3] MISO	-
18 [SPI_SCK]	PA17	SERCOM0/PAD[1] SCK	-
19 [GND]	-	GND	Ground
20 [VCC]	-	VCC_TARGET_P3V3	Power for extension Board

4.2.3 mikroBUS Header Connector

The mikroBUS socket is comprised of a pair of 1×8 female headers with a proprietary pin configuration and silkscreen markings.

The pinout (always laid out in the same order) consists of three groups of communication pins (SPI, UART and I^2C), five additional pins (PWM, interrupt, analog input, reset and chip select), and two power groups (+3.3V and 5V).

The following table provides the mikroBUS header details.

Table 4-7. mikroBUS Header Connector (J605/J606)

mikroBUS Pin	MCU Pin	Function	Shared Functionality
[AN]	PA02	ADC/AIN[0]	EXT1
[RST]	PB04	GPIO	EXT1
[CS]	PB00	SERCOM3/PAD[2] CS	EXT1
[SCK]	PB03	SERCOM3/PAD[1] SCK	EXT1
[MISO]	PB01	SERCOM3/PAD[3] MISO	EXT1
[MOSI]	PB02	SERCOM3/PAD[0] MOSI	EXT1
[+3.3V]	-	VCC_TARGET_P3V3	-
[GND]	-	GND	-
[PWM]	PB08	TC0/WO[0]	EXT1
[INT]	PB07	EIC/EXTINT[7]	EXT1
[RX]	PA23	SERCOM2/PAD[1] UART RX	EXT1
[TX]	PA22	SERCOM2/PAD[0] UART TX	EXT1
[SCL]	PB31	SERCOM5/PAD[1] I²C SCL	EXT1, EXT2, EXT3, Arduino, EDBG DGI
[SDA]	PB30	SERCOM5/PAD[0] I²C SDA	EXT1, EXT2, EXT3, Arduino, EDBG DGI
[+5V]	-	VCC_P5V0	-
[GND]	-	GND	Ground

4.2.4 Arduino Uno Header Connectors

The PIC32CM LE00/LS00/LS60 Curiosity Pro implements Arduino shield header connectors based on the Arduino Uno. All references to the Arduino pin names are considered from the official Arduino schematics of the Arduino Uno.

Tip: All pins do not have the same functionality on the Arduino Uno as on the shield connectors. Each shield must be checked for compatibility before it is connected.

Table 4-8. Power (J500)

J500 Pin	MCU Pin	Function	Shared Functionality
1 [RFU]	-	N/C	-
2 [IOREF]	-	VCC_TARGET_P3V3	-
3 [RESET]	/RESET	TARGET_RESETN	EDBG SWD, Cortex Debug, PICkit 4 Interface, RESET button
4 [3.3V]	-	VCC_TARGET_P3V3	-
5 [5V]	-	VCC_P5V0	-
6 [GND]	-	GND	-
7 [GND]	-	GND	-
8 [VIN]	-	N/C	-

Table 4-9. Analog (J501)

J501 Pin (SHIELD_ANA)	MCU Pin	Function	Shared Functionality
1 [A0]	PC00	ADC/AIN[20]	-
2 [A1]	PC01	ADC/AIN[21]	-
3 [A2]	PC02	ADC/AIN[22]	-
4 [A3]	PC03	ADC/AIN[23]	-
5 [A4]	PB05	ADC/AIN[13]	EXT2
6 [A5]	PB06	ADC/AIN[14]	EXT2

Table 4-10. Digital Low (J504)

J504 Pin (SHIELD_DIG)	MCU Pin	Function	Shared Functionality
1 [RX/D0]	PA05	SERCOM0/PAD[1] UART RX	EXT2
2 [TX/D1]	PA04	SERCOM0/PAD[0] UART TX	-
3 [D2]	PC05	GPIO	-
4 [PWM/D3]	PC06	GPIO	-
5 [D4]	PC07	GPIO	-
6 [PWM/D5]	PC08	GPIO	-
7 [PWM/D6]	PC09	GPIO	-
8 [D7]	PC10	GPIO	-

© 2022 Microchip Technology Inc.
and its subsidiaries

Table 4-11. Digital High (J503)

J503 Pin (SHIELD_DIG)	MCU Pin	Function	Shared Functionality
1 [D8]	PC11	GPIO	-
2 [PWM/D9]	PC12	GPIO	-
3 [PWM/D10]	PA10	GPIO	EXT1
4 [PWM/D11]	PA08	SERCOM2/PAD[0] SPI MOSI	EXT3
5 [D12]	PA11	SERCOM2/PAD[3] SPI MISO	EXT1
6 [D13]	PA09	SERCOM2/PAD[1] SPI SCK	EXT3
7 [GND]	-	GND	-
8 [AREF]	PA03	ADC / DAC VREFA	EXT1
9 [SDA/D14]	PB30	SERCOM5 PAD[0] I²C SDA	EXT1, EXT2, EXT3, mikroBUS, EDBG DGI
10 [SCL/D15]	PB31	SERCOM5 PAD[1] I²C SCL	EXT1, EXT2, EXT3, mikroBUS, EDBG DGI

Table 4-12. SPI (J502)

J502 Pin (SHIELD_DIG)	MCU Pin	Function	Shared Functionality
1 [MISO]	PA11	SERCOM2/PAD[3] SPI MISO	EXT1
2 [5V]	-	VCC_P5V0	-
3 [SCK]	PA09	SERCOM2/PAD[1] SPI SCK	EXT3
4 [MOSI]	PA08	SERCOM2/PAD[0] SPI MOSI	EXT3
5 [RESET]	/RESET	TARGET_RESETN	EDBG SWD, Cortex Debug, PICkit 4 Interface, RESET button
6 [GND]	-	GND	-

4.2.5 MCU Current Measurement Header

An angled 1x2, 100 mil pin-header marked with CURRENT MEASUREMENT is located at the upper edge of the Curiosity Pro. All power to the PIC32CM LE00/LS00/LS60 is routed through this header. To measure the power consumption of the device, remove the jumper and replace it with an ammeter.

Table 4-13. MCU Current Measurement (J203)

Current Measurement Header Pin	Function
1	-
2	VCC_MCU_P3V3

⚠ CAUTION Removing the jumper from the pin-header while the kit is powered may cause the PIC32CM LE00/LS00/LS60 to be powered through its I/O pins. This may cause permanent damage to the device.

4.2.6 USB

The PIC32CM LE00/LS00/LS60 Curiosity Pro has a USB Micro-AB connector to use with the PIC32CM LE00/LS00/LS60 USB module, labeled TARGET USB on the kit.

In Device mode, for USB self-powered devices, a GPIO (VBUS_DET) is used to detect the VBUS voltage.

The USB ID signal is connected to another GPIO (USB_ID_DET) and can be used to check if a Host cable is connected.

In Host mode, the VBUS voltage is enabled by setting a GPIO (VBUS_HOST_EN) to low.

Table 4-14. Target USB Connections (J200)

MCU Pin	Function	Shared Functionality
PA24	USB/DM	-
PA25	USB/DP	-
PA21	GPIO (VBUS_DET)	-
PA20	GPIO (USB_ID_DET)	-
PC21	GPIO ($\overline{\text{VBUS_HOSTEN}}$)	-

4.2.7 Cortex Debug Header

The Curiosity Pro has a 10-pin, 50-mil Cortex Debug header that can be used to attach external debug probes to the PIC32CM LE00/LS00/LS60.

Table 4-15. Cortex Debug Header (J400)

Cortex Debug Header Pin	MCU Pin	Function	Shared Functionality
1 [VCC]	-	VCC_TARGET_P3V3	-
2 [SWDIO/TMS]	PA31/SWDIO	SWDIO	EDBG SWD, PICkit 4 Interface
3 [GND]	-	GND	-
4 [SWCLK/TCK]	PA30/SWCLK	SWCLK	EDBG SWD, PICkit 4 Interface
5 [GND]	-	GND	-
6 [SWO/TDO]	N/C	-	-
7 [KEY]	N/C	-	-
8 [NC/TDI]	N/C	-	-
9 [GNDDetect]	GND	GND	-
10 [nRESET]	/RESET	TARGET_RESETN	EDBG SWD, PICkit 4 Interface, Arduino, RESET button

4.2.8 PICkit 4 Interface Header

The Curiosity Pro has an 8-pin SIL header that can be used to attach PICkit™ 4 debug probes to the PIC32CM LE00/LS00/LS60.

Table 4-16. PICkit 4 Interface Header (J402)

PICkit 4 Interface Header Pin	MCU Pin	Function	Shared Functionality
1 [/MCLR]	/RESET	TARGET_RESETN	EDBG SWD, Cortex Debug, Arduino, RESET button
2 [VTG]	-	VCC_TARGET_P3V3	-

.....continued

PICkit 4 Interface Header Pin	MCU Pin	Function	Shared Functionality
3 [GND]	-	GND	-
4 [SWO]	N/C	-	-
5 [SWCLK]	PA30/SWCLK	SWCLK	EDBG SWD, Cortex Debug
6 [N/C]	N/C	-	-
7 [N/C]	N/C	-	-
8 [SWDIO]	PA31/SWDIO	SWDIO	EDBG SWD, Cortex Debug

4.3 Peripherals

4.3.1 Oscillators

The Curiosity Pro evaluation kit contains two oscillators, a 32.768 kHz and a 12 MHz, which can be used as clock sources to the PIC32CM LE00/LS00/LS60 devices.

Table 4-17. External 32.768 kHz Oscillator Connection

Silkscreen Text	MCU Pin	Function	Shared Functionality
32.768 kHz OSC	PA00/XIN32	XIN32	-

Table 4-18. External 12 MHz Oscillator Connection

Silkscreen Text	MCU Pin	Function	Shared Functionality
12 MHz OSC	PA14/XIN	XIN	-

Note: The external 12 MHz Oscillator, which feeds the XIN pin, is permanently powered. The oscillator current consumption must be considered, especially when measuring the current consumption of the MCU in Standby and Off modes. Users can disconnect the oscillator to remove this extra current consumption.

4.3.2 Mechanical Buttons

The Curiosity Pro board contains three mechanical buttons: one Reset button connected to the PIC32CM LE00/LS00/LS60 reset line, and two generic user configurable buttons. When a button is pressed, it will drive the I/O line to GND. The mechanic button details are provided in the table below.

Tip: The pull-up resistor is not connected to the generic user-configurable buttons. Ensure to enable their internal pull-up in the PIC32CM LE00/LS00/LS60 device to use these buttons.

Table 4-19. Mechanical Buttons Connection

Silkscreen Text	MCU Pin	Function	Shared Functionality
RESET	/RESET	TARGET_RESETN	EDBG SWD, Cortex Debug, PICkit 4 Interface, Arduino
SW0	PC20	GPIO	-
SW1	PC28	GPIO	-

4.3.3 LEDs

One green LED and one red LED are available on the Curiosity Pro evaluation board, and these LEDs can be turned on and off. The LEDs can be activated by driving the connected I/O line to GND.

Table 4-20. LEDs Connection

Silkscreen Text	MCU Pin	Function	Shared Functionality
LED0 (Green)	PC19	GPIO	-
LED1 (Red)	PC27	GPIO	-

© 2022 Microchip Technology Inc.
and its subsidiaries

4.3.4 Touch Button

One self-capacitance button is available on the Curiosity Pro board. The Touch button is intended to be driven by the built-in Peripheral Touch Controller (PTC) of the device. A dedicated driven shield pin is also available for the Touch button.

Note: To get started with Touch, refer to the MPLAB Harmony v3 Touch Library.

Table 4-21. Touch Button Connection

Silkscreen Text	Schematics Text	MCU Pin	Function	Shared Functionality
BTN	BTN	PB12	PTC/XY[30]	-
-	BTN SHIELD	PA01	GPIO	-

4.3.5 Potentiometer

One Round Trimming Potentiometer with 10Ω to 2MΩ resistance range is available on the Curiosity Pro board.

Table 4-22. Potentiometer Connection

Silkscreen Text	MCU Pin	Function	Shared Functionality
VR400	PA07	ADC/AIN[5]	-

4.4 Embedded Debugger Implementation

The Curiosity Pro contains an Embedded Debugger (EDBG) that can be used to program and debug the PIC32CM LE00/LS00/LS60 using Serial Wire Debug (SWD). The Embedded Debugger also includes a virtual COM port interface over UART, a Data Gateway Interface (DGI) over SPI, TWI (I^2C), and four of the PIC32CM LE00/LS00/LS60 GPIOs.

MPLAB X IDE can be used as a front end for the Embedded Debugger.

4.4.1 Serial Wire Debug (EDBG SWD)

The Serial Wire Debug (SWD) uses two pins to communicate with the target. For additional information on how to use the programming and debugging capabilities of the EDBG, refer to the Embedded Debugger User Guide.

Table 4-23. Serial Wire Debug (SWD) Connection

Schematics Text	MCU Pin	Function	Shared Functionality
[EDBG_SWD] TARGET_CHIP_RESET	/RESET	TARGET_RESETN	Cortex Debug, PICkit 4 Interface, Arduino, RESET button
[EDBG_SWD] SWCLK	PA30/SWCLK	SWCLK	Cortex Debug, PICkit 4 Interface
[EDBG_SWD] SWDIO	PA31/SWDIO	SWDIO	Cortex Debug, PICkit 4 Interface

4.4.2 Virtual COM Port (EDBG CDC)

The Embedded Debugger acts as a virtual COM port gateway using any one of the PIC32CM LE00/LS00/LS60 UARTs. For additional information on how to use the virtual COM port, refer to the Embedded Debugger User Guide.

Table 4-24. Virtual COM Port (CDC) Connection

Schematics Text	MCU Pin	Function	Shared Functionality
[EDBG_UART] TX	PB21	SERCOM3/PAD[1] UART RX	EXT2
[EDBG_UART] RX	PB20	SERCOM3/PAD[0] UART TX	EXT2

4.4.3 Data Gateway Interface (EDBG DGI)

The Embedded Debugger features a Data Gateway Interface (DGI) using either a SPI or I^2C. The DGI can be used to send data from the PIC32CM LE00/LS00/LS60 to the Host PC.

For additional information on how to use the DGI interface, refer to the Data Gateway Interface User's Guide and Embedded Debugger User Guide.

Table 4-25. DGI Interface (DGI) Connections When Using SPI

Schematics Text	MCU Pin	Function	Shared Functionality
[DGI_SPI SS]	PC24	GPIO	EXT2
[DGI_SPI MOSI]	PB24	SERCOM4/PAD[0] MOSI	EXT2
[DGI_SPI MISO]	PC25	SERCOM4/PAD[3] MISO	EXT2
[DGI_SPI SCK]	PB25	SERCOM4/PAD[1] SCK	EXT2

Table 4-26. DGI Interface (DGI) When Using I^2C

Schematics Text	MCU Pin	Function	Shared Functionality
[DGI_I2C SCL]	PB31	SERCOM5/PAD[1] I²C SCL	EXT1, EXT2, EXT3, Arduino, mikroBUS
[DGI_I2C SDA]	PB30	SERCOM5/PAD[0] I²C SDA	EXT1, EXT2, EXT3, Arduino, mikroBUS

Four GPIO lines are connected to the Embedded Debugger. The EDBG can monitor these lines and time stamp the pin value changes. This makes it possible to accurately time stamp events in the application code.

Table 4-27. GPIO Lines Connected to the EDBG

Schematics Text	MCU Pin	Function	Shared Functionality
[DGI_GPIO0]	PC13	GPIO	-
[DGI_GPIO1]	PC14	GPIO	-
[DGI_GPIO2]	PC15	GPIO	-
[DGI_GPIO3]	PC16	GPIO	-

4.5 Embedded Current Measurement Circuitry (XAM) Configuration

On the PIC32CM LE00/LS00/LS60 Curiosity Pro, the MCU and the on-board peripherals or components are powered by their own regulator as shown in the following figure.

All other parts of the board, specifically the embedded debugger and accompanying Curiosity Pro Embedded Current Measurement Circuitry (XAM), are powered from a separate regulator.

Figure 4-2. XAM Configuration

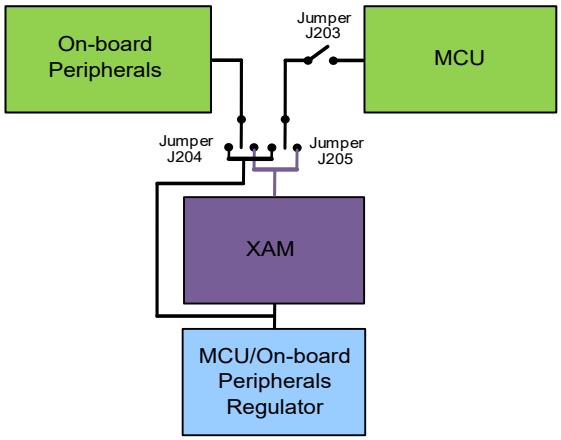

The current to the MCU and the on-board peripherals or components can be separately measured by connecting them to the XAM circuit through their dedicated jumper.

Table 4-28. XAM On-Board Peripherals/Components Current Measurement (J204)

Jumper Setting	Function
1-2	XAM is bypassed for the On-board Peripherals/Components
2-3	XAM is measuring the On-board Peripherals/Components current consumption

Table 4-29. XAM MCU Current Measurement (J205)

Jumper Setting	Function
1-2	XAM is bypassed for the MCU
2-3	XAM is measuring the MCU current consumption

On the Curiosity Pro, the XAM can be used in the following four configurations:

- No current measurement or external MCU current measurement: The XAM is bypassed, and the MCU and the on-board Peripherals/Components are supplied by the regulator. Set both the jumpers in the BYPASS position. In this configuration, users can connect external measurement tools on the Curiosity Pro MCU power measurement header to measure MCU current directly instead of using the XAM.
- MCU current measurement: The XAM measures only the MCU current while the on-board Peripherals/Components are supplied by the regulator. For this configuration, place the jumper for the on-board Peripherals/Components into the BYPASS position and the MCU into the MEASURE position.
- Peripherals measurement: The XAM measures only the current of the on-board Peripherals/Components while the MCU is supplied by the regulator. For this configuration place the jumper for MCU into the BYPASS position and the on-board Peripherals/Components jumper into the MEASURE position.
- MCU and peripherals measurement: In this configuration both the MCU and the on-board Peripherals/Components are measured by the XAM. Place both the jumpers on the on-board Peripherals/Components and MCU headers in the MEASURE position.

© 2022 Microchip Technology Inc.
and its subsidiaries

5. Product Identifier and Revision

The revision and product identifier of Curiosity Pro boards can be identified in their unique serial number, either using MPLAB X IDE or by looking at the sticker on the bottom of the PCB.

By connecting a Curiosity Pro board to a computer with MPLAB X IDE running, an information window containing the kit details, such as its serial number will be displayed.

The board serial number string has the following format:

- MPLAB X IDE: MCHPnnnnrrsssssssss
- PCB: A09-nnnn/rr, SN:sssssssss

Where,

n = Product identifier

r = Revision

s = Board number

Table 5-1. PIC32C LE00/LS00/LS60 Curiosity Pro Product Identifiers

Family	Product Identifier
PIC32CM LE00	3365
PIC32CM LS00	3366
PIC32CM LS60	3383

6. Revision History

Rev E - 03/2022
The following updates were implemented in this revision:

- A note was added to Table 4-18 in Oscillators
- Verbiage was updated in Product Identifier and Revision to denote the addition of MPLAB X IDE content and describe the serial number format

Rev D - 12/2021
The SPI, I^2S, and I^2C standards use the terminology "Master" and "Slave". The equivalent Microchip terminology used in this document is "Host" and "Client" respectively. These terms have been updated throughout this document for this revision.

Minor typographical edits were done throughout this document revision.

The following changes were made to specific sections of the document:

- Updated EDBG I^2C to EDBG DGI in the following sections:
  - Extension Headers
  - mikroBUS Header Connector
  - Arduino Uno Header Connectors

Rev C - 08/2021
Minor typographical edits were done throughout this document revision.

The following changes were made to specific sections of the document:

- Updated the naming of the Xplained Pro Extension Board throughout the document
- Updated the listed part numbers in Table 1-2 of Overview of Available Kits

Rev B - 04/2021
Minor typographical edits were done throughout this document revision.

The following changes were made to specific sections of the document:

- Images were replaced in the following topics:
  - Preface
  - Kit Overview
  - Overview
  - Headers and Connectors

Rev A - 10/2020
This is the initial released version of this document.

The Microchip Website

Microchip provides online support via our website at www.microchip.com/. This website is used to make files and information easily available to customers. Some of the content available includes:

- **Product Support** – Data sheets and errata, application notes and sample programs, design resources, user's guides and hardware support documents, latest software releases and archived software
- **General Technical Support** – Frequently Asked Questions (FAQs), technical support requests, online discussion groups, Microchip design partner program member listing
- **Business of Microchip** – Product selector and ordering guides, latest Microchip press releases, listing of seminars and events, listings of Microchip sales offices, distributors and factory representatives

Product Change Notification Service

Microchip's product change notification service helps keep customers current on Microchip products. Subscribers will receive email notification whenever there are changes, updates, revisions or errata related to a specified product family or development tool of interest.

To register, go to www.microchip.com/pcn and follow the registration instructions.

Customer Support

Users of Microchip products can receive assistance through several channels:

- Distributor or Representative
- Local Sales Office
- Embedded Solutions Engineer (ESE)
- Technical Support

Customers should contact their distributor, representative or ESE for support. Local sales offices are also available to help customers. A listing of sales offices and locations is included in this document.

Technical support is available through the website at: www.microchip.com/support

Microchip Devices Code Protection Feature

Note the following details of the code protection feature on Microchip devices:

- Microchip products meet the specification contained in their particular Microchip Data Sheet.
- Microchip believes that its family of products is one of the most secure families of its kind on the market today, when used in the intended manner and under normal conditions.
- There are dishonest and possibly illegal methods used to breach the code protection feature. All of these methods, to our knowledge, require using the Microchip products in a manner outside the operating specifications contained in Microchip's Data Sheets. Most likely, the person doing so is engaged in theft of intellectual property.
- Microchip is willing to work with the customer who is concerned about the integrity of their code.
- Neither Microchip nor any other semiconductor manufacturer can guarantee the security of their code. Code protection does not mean that we are guaranteeing the product as "unbreakable."

Code protection is constantly evolving. We at Microchip are committed to continuously improving the code protection features of our products. Attempts to break Microchip's code protection feature may be a violation of the Digital Millennium Copyright Act. If such acts allow unauthorized access to your software or other copyrighted work, you may have a right to sue for relief under that Act.

Legal Notice

Information contained in this publication regarding device applications and the like is provided only for your convenience and may be superseded by updates. It is your responsibility to ensure that your application meets with

your specifications. MICROCHIP MAKES NO REPRESENTATIONS OR WARRANTIES OF ANY KIND WHETHER EXPRESS OR IMPLIED, WRITTEN OR ORAL, STATUTORY OR OTHERWISE, RELATED TO THE INFORMATION, INCLUDING BUT NOT LIMITED TO ITS CONDITION, QUALITY, PERFORMANCE, MERCHANTABILITY OR FITNESS FOR PURPOSE. Microchip disclaims all liability arising from this information and its use. Use of Microchip devices in life support and/or safety applications is entirely at the buyer's risk, and the buyer agrees to defend, indemnify and hold harmless Microchip from any and all damages, claims, suits, or expenses resulting from such use. No licenses are conveyed, implicitly or otherwise, under any Microchip intellectual property rights unless otherwise stated.

Trademarks

The Microchip name and logo, the Microchip logo, Adaptec, AnyRate, AVR, AVR logo, AVR Freaks, BesTime, BitCloud, chipKIT, chipKIT logo, CryptoMemory, CryptoRF, dsPIC, FlashFlex, flexPWR, HELDO, IGLOO, JukeBlox, KeeLoq, Kleer, LANCheck, LinkMD, maXStylus, maXTouch, MediaLB, megaAVR, Microsemi, Microsemi logo, MOST, MOST logo, MPLAB, OptoLyzer, PackeTime, PIC, picoPower, PICSTART, PIC32 logo, PolarFire, Prochip Designer, QTouch, SAM-BA, SenGenuity, SpyNIC, SST, SST Logo, SuperFlash, Symmetricom, SyncServer, Tachyon, TempTrackr, TimeSource, tinyAVR, UNI/O, Vectron, and XMEGA are registered trademarks of Microchip Technology Incorporated in the U.S.A. and other countries.

APT, ClockWorks, The Embedded Control Solutions Company, EtherSynch, FlashTec, Hyper Speed Control, HyperLight Load, IntelliMOS, Libero, motorBench, mTouch, Powermite 3, Precision Edge, ProASIC, ProASIC Plus, ProASIC Plus logo, Quiet-Wire, SmartFusion, SyncWorld, Temux, TimeCesium, TimeHub, TimePictra, TimeProvider, Vite, WinPath, and ZL are registered trademarks of Microchip Technology Incorporated in the U.S.A.

Adjacent Key Suppression, AKS, Analog-for-the-Digital Age, Any Capacitor, AnyIn, AnyOut, BlueSky, BodyCom, CodeGuard, CryptoAuthentication, CryptoAutomotive, CryptoCompanion, CryptoController, dsPICDEM, dsPICDEM.net, Dynamic Average Matching, DAM, ECAN, EtherGREEN, In-Circuit Serial Programming, ICSP, INICnet, Inter-Chip Connectivity, JitterBlocker, KleerNet, KleerNet logo, memBrain, Mindi, MiWi, MPASM, MPF, MPLAB Certified logo, MPLIB, MPLINK, MultiTRAK, NetDetach, Omniscient Code Generation, PICDEM, PICDEM.net, PICkit, PICtail, PowerSmart, PureSilicon, QMatrix, REAL ICE, Ripple Blocker, SAM-ICE, Serial Quad I/O, SMART-I.S., SQI, SuperSwitcher, SuperSwitcher II, Total Endurance, TSHARC, USBCheck, VariSense, ViewSpan, WiperLock, Wireless DNA, and ZENA are trademarks of Microchip Technology Incorporated in the U.S.A. and other countries.

SQTP is a service mark of Microchip Technology Incorporated in the U.S.A.

The Adaptec logo, Frequency on Demand, Silicon Storage Technology, and Symmcom are registered trademarks of Microchip Technology Inc. in other countries.

GestIC is a registered trademark of Microchip Technology Germany II GmbH & Co. KG, a subsidiary of Microchip Technology Inc., in other countries.

All other trademarks mentioned herein are property of their respective companies.

© 2020, Microchip Technology Incorporated, Printed in the U.S.A., All Rights Reserved.

ISBN: 978-1-6683-0073-2

Quality Management System

For information regarding Microchip's Quality Management Systems, please visit www.microchip.com/quality.

Worldwide Sales and Service

AMERICAS	ASIA/PACIFIC	ASIA/PACIFIC	EUROPE
Corporate Office	**Australia - Sydney**	**India - Bangalore**	**Austria - Wels**
2355 West Chandler Blvd.	Tel: 61-2-9868-6733	Tel: 91-80-3090-4444	Tel: 43-7242-2244-39
Chandler, AZ 85224-6199	**China - Beijing**	**India - New Delhi**	Fax: 43-7242-2244-393
Tel: 480-792-7200	Tel: 86-10-8569-7000	Tel: 91-11-4160-8631	**Denmark - Copenhagen**
Fax: 480-792-7277	**China - Chengdu**	**India - Pune**	Tel: 45-4485-5910
Technical Support:	Tel: 86-28-8665-5511	Tel: 91-20-4121-0141	Fax: 45-4485-2829
www.microchip.com/support	**China - Chongqing**	**Japan - Osaka**	**Finland - Espoo**
Web Address:	Tel: 86-23-8980-9588	Tel: 81-6-6152-7160	Tel: 358-9-4520-820
www.microchip.com	**China - Dongguan**	**Japan - Tokyo**	**France - Paris**
Atlanta	Tel: 86-769-8702-9880	Tel: 81-3-6880- 3770	Tel: 33-1-69-53-63-20
Duluth, GA	**China - Guangzhou**	**Korea - Daegu**	Fax: 33-1-69-30-90-79
Tel: 678-957-9614	Tel: 86-20-8755-8029	Tel: 82-53-744-4301	**Germany - Garching**
Fax: 678-957-1455	**China - Hangzhou**	**Korea - Seoul**	Tel: 49-8931-9700
Austin, TX	Tel: 86-571-8792-8115	Tel: 82-2-554-7200	**Germany - Haan**
Tel: 512-257-3370	**China - Hong Kong SAR**	**Malaysia - Kuala Lumpur**	Tel: 49-2129-3766400
Boston	Tel: 852-2943-5100	Tel: 60-3-7651-7906	**Germany - Heilbronn**
Westborough, MA	**China - Nanjing**	**Malaysia - Penang**	Tel: 49-7131-72400
Tel: 774-760-0087	Tel: 86-25-8473-2460	Tel: 60-4-227-8870	**Germany - Karlsruhe**
Fax: 774-760-0088	**China - Qingdao**	**Philippines - Manila**	Tel: 49-721-625370
Chicago	Tel: 86-532-8502-7355	Tel: 63-2-634-9065	**Germany - Munich**
Itasca, IL	**China - Shanghai**	**Singapore**	Tel: 49-89-627-144-0
Tel: 630-285-0071	Tel: 86-21-3326-8000	Tel: 65-6334-8870	Fax: 49-89-627-144-44
Fax: 630-285-0075	**China - Shenyang**	**Taiwan - Hsin Chu**	**Germany - Rosenheim**
Dallas	Tel: 86-24-2334-2829	Tel: 886-3-577-8366	Tel: 49-8031-354-560
Addison, TX	**China - Shenzhen**	**Taiwan - Kaohsiung**	**Israel - Ra'anana**
Tel: 972-818-7423	Tel: 86-755-8864-2200	Tel: 886-7-213-7830	Tel: 972-9-744-7705
Fax: 972-818-2924	**China - Suzhou**	**Taiwan - Taipei**	**Italy - Milan**
Detroit	Tel: 86-186-6233-1526	Tel: 886-2-2508-8600	Tel: 39-0331-742611
Novi, MI	**China - Wuhan**	**Thailand - Bangkok**	Fax: 39-0331-466781
Tel: 248-848-4000	Tel: 86-27-5980-5300	Tel: 66-2-694-1351	**Italy - Padova**
Houston, TX	**China - Xian**	**Vietnam - Ho Chi Minh**	Tel: 39-049-7625286
Tel: 281-894-5983	Tel: 86-29-8833-7252	Tel: 84-28-5448-2100	**Netherlands - Drunen**
Indianapolis	**China - Xiamen**		Tel: 31-416-690399
Noblesville, IN	Tel: 86-592-2388138		Fax: 31-416-690340
Tel: 317-773-8323	**China - Zhuhai**		**Norway - Trondheim**
Fax: 317-773-5453	Tel: 86-756-3210040		Tel: 47-72884388
Tel: 317-536-2380			**Poland - Warsaw**
Los Angeles			Tel: 48-22-3325737
Mission Viejo, CA			**Romania - Bucharest**
Tel: 949-462-9523			Tel: 40-21-407-87-50
Fax: 949-462-9608			**Spain - Madrid**
Tel: 951-273-7800			Tel: 34-91-708-08-90
Raleigh, NC			Fax: 34-91-708-08-91
Tel: 919-844-7510			**Sweden - Gothenberg**
New York, NY			Tel: 46-31-704-60-40
Tel: 631-435-6000			**Sweden - Stockholm**
San Jose, CA			Tel: 46-8-5090-4654
Tel: 408-735-9110			**UK - Wokingham**
Tel: 408-436-4270			Tel: 44-118-921-5800
Canada - Toronto			Fax: 44-118-921-5820
Tel: 905-695-1980			
Fax: 905-695-2078			

© 2022 Microchip Technology Inc.
and its subsidiaries