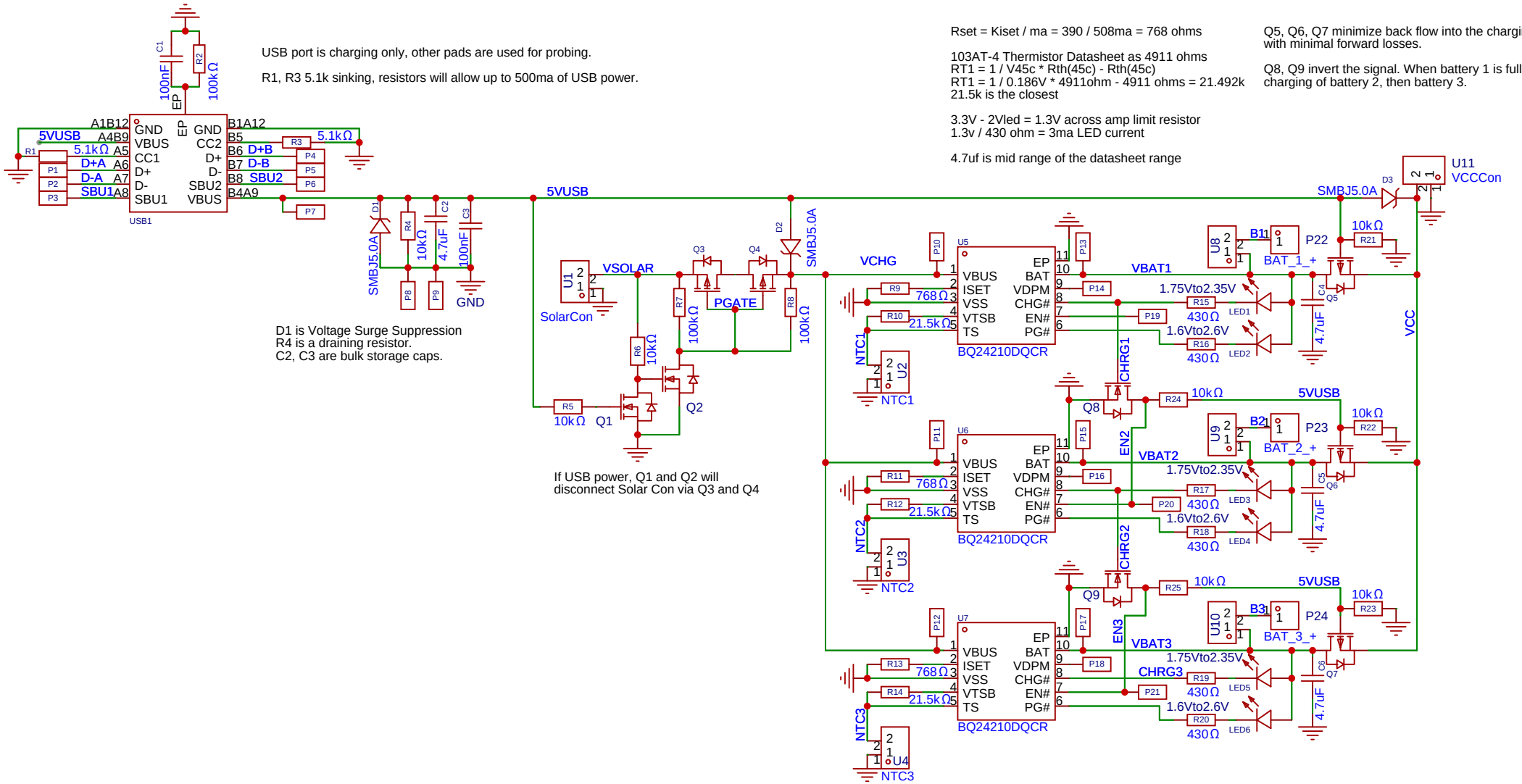

Notes
-- Trace width is 10mils per IPC 2221 w/ 10C rise and 0.5ozcu can handle 0.529 amps. Max amps is 0.5A

TODO
-- ADD switch to charge LED only show LED's when button is pressed.
-- Change battery switches to single thro with 4 contacts

Ref
https://www.youtube.com/watch?v=TvTJO_6ITuA&t=431s
https://hackaday.com/2023/01/04/all-about-usb-c-resistors-and-emarkers/
https://youtu.be/37kGva3NW8w?si=npvO5ycclXB4x59t&t=715

Schematic	TDeck 18650 circuit	Update Date	2024-02-17
		Create Date	2024-02-16
Page	P1	Part Number	JLCPCB-002
Drawn	NA	TDeck_18650_Charger	
Reviewed	NA		
		VER	SIZE	PAGE 1 OF 1
EasyEDA		V0.1	A4	Self