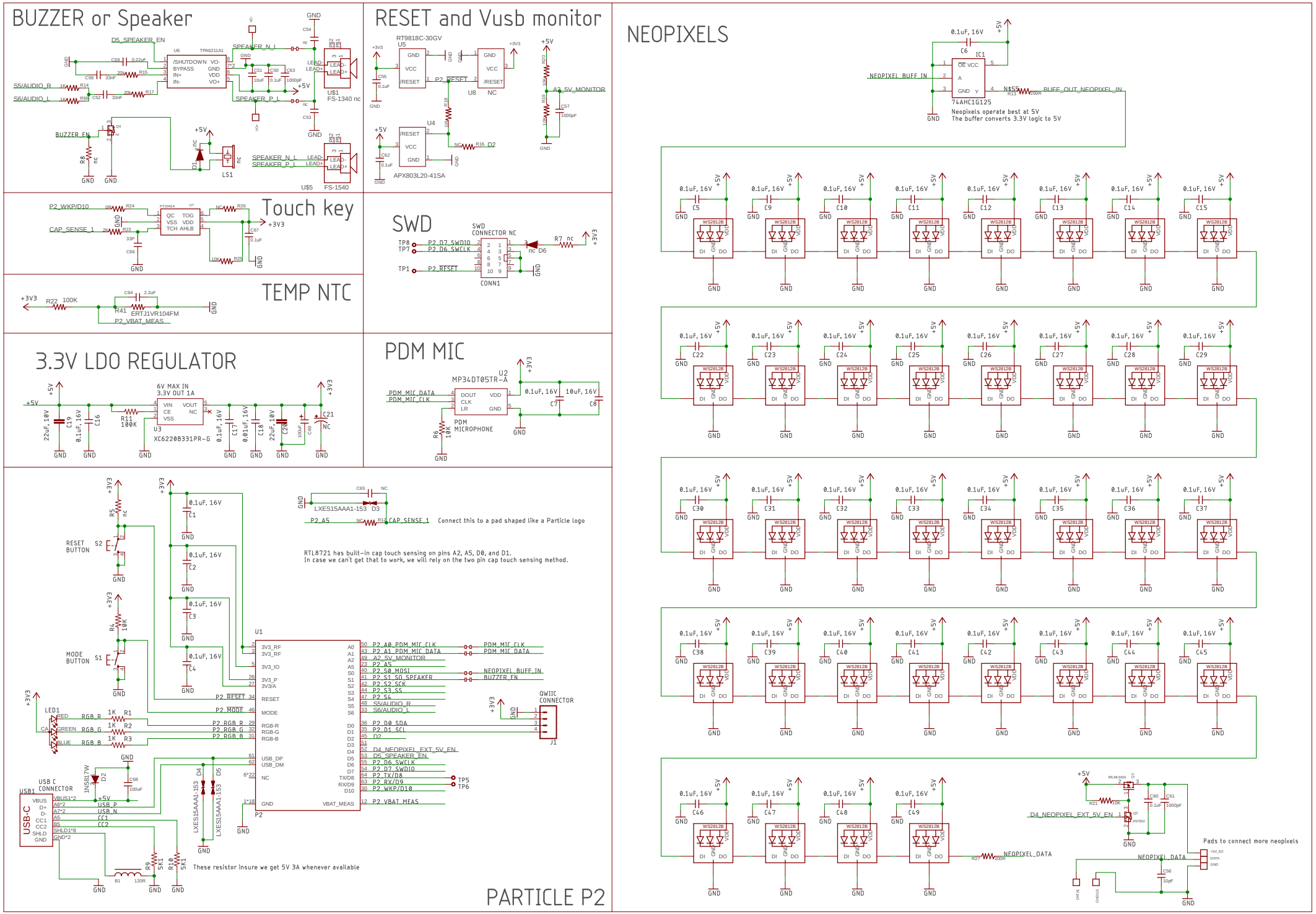
BUZZER or Speaker
D5_SPEAKER_EN
U6 TPA6211A1
/SHUTDOWN BYPASS IN+ IN-
VO- GND VDD VO+
SPEAKER_N_L
SPEAKER_P_L
S5/AUDIO_R
S6/AUDIO_L
BUZZER_EN
LS1
U5 FS-1340 nc
U5 FS-1540
RESET and Vusb monitor
RT9818C-30GV
U5
P2_RESET
U8 NC
U4
APX803L20-41SA
A2_5V_MONITOR
D2
Touch key
P2_WKP/D10
CAP_SENSE_1
PT2041A U7
QC TOG VSS VDD TCH AHLB
SWD
SWD CONNECTOR NC
TP8 P2_D7_SWDIO
TP7 P2_D6_SWCLK
TP1 P2_RESET
CONN1
R7 nc
TEMP NTC
R22 100K
R41 ERTJ1VR104FM
P2_VBAT_MEAS
3.3V LDO REGULATOR
6V MAX IN
3.3V OUT 1A
VIN CE VSS VOUT NC
U3
XC6220B331PR-G
R11 100K
PDM MIC
U2
MP34DT05TR-A
DOUT CLK LR VDD GND
PDM_MIC_DATA
PDM_MIC_CLK
PDM MICROPHONE
R6 10K
RESET BUTTON
S2
MODE BUTTON
S1
LED1
RED GREEN BLUE
RGB_R RGB_G RGB_B
USB C CONNECTOR
USB1
USB-C
VBUS D+ D- CC1 CC2 SHLD GND
VBUS1*2 A6*2 A7*2 A5 B5 SHLD1*8 GND*2
USB_P USB_N CC1 CC2
LXES15AAA1-153 D3
P2_A5
CAP_SENSE_1
Connect this to a pad shaped like a Particle logo
RTL8721 has built-in cap touch sensing on pins A2, A5, D0, and D1.
In case we can't get that to work, we will rely on the two pin cap touch sensing method.
U1
3V3_RF 3V3_RF 3V3_IO 3V3_P 3V3/A RESET MODE RGB-R RGB-G RGB-B USB_DP USB_DM NC GND
A0 A1 A2 A5 S0 S1 S2 S3 S4 S5 S6 D0 D1 D2 D3 D4 D5 D6 D7 TX/D8 RXD9 D10 VBAT_MEAS
P2_A0_PDM_MIC_CLK
P2_A1_PDM_MIC_DATA
A2_5V_MONITOR
P2_A5
P2_S0_MOSI
P2_S1_SO_SPEAKER
P2_S2_SCK
P2_S3_SS
P2_S4
S5/AUDIO_R
S6/AUDIO_L
P2_D0_SDA
P2_D1_SCL
D2
D4_NEOPIXEL_EXT_5V_EN
D5_SPEAKER_EN
P2_D6_SWCLK
P2_D7_SWDIO
P2_TX/D8
P2_RX/D9
P2_WKP/D10
P2_VBAT_MEAS
PDM_MIC_CLK
PDM_MIC_DATA
NEOPIXEL_BUFF_IN
BUZZER_EN
QWIIC CONNECTOR
J1
TP5
TP6
P2_RESET
P2_MODE
P2_RGB_R
P2_RGB_G
P2_RGB_B
These resistor insure we get 5V 3A whenever available
PARTICLE P2
NEOPIXELS
74AHC1G125
Neopixels operate best at 5V
The buffer converts 3.3V logic to 5V
NEOPIXEL_BUFF_IN
BUFF_OUT_NEOPIXEL_IN
WS2812B
NEOPIXEL_DATA
D4_NEOPIXEL_EXT_5V_EN
Pads to connect more neopixels