ACERBIC

This

NOT

That

DIY

This

NOT

That

SKEPTICAL

This

NOT

That

RETRO

This

NOT

That

SMART

This

NOT

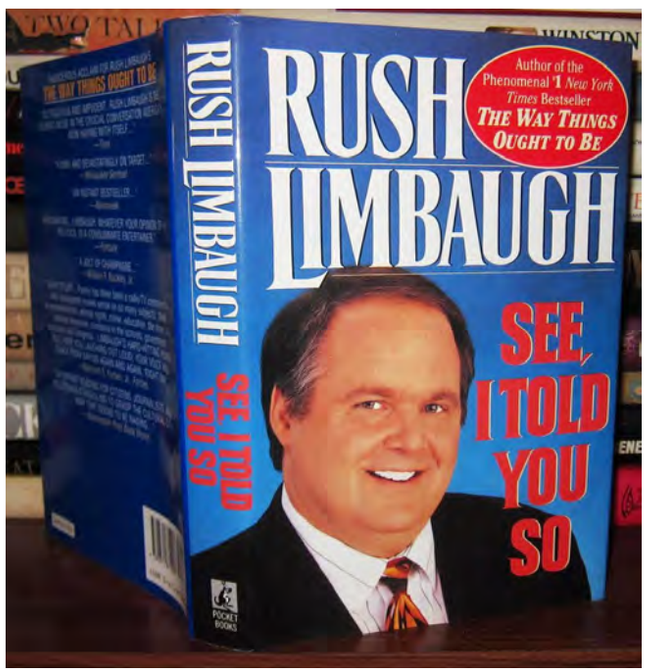

That

OBSCURE

NOT

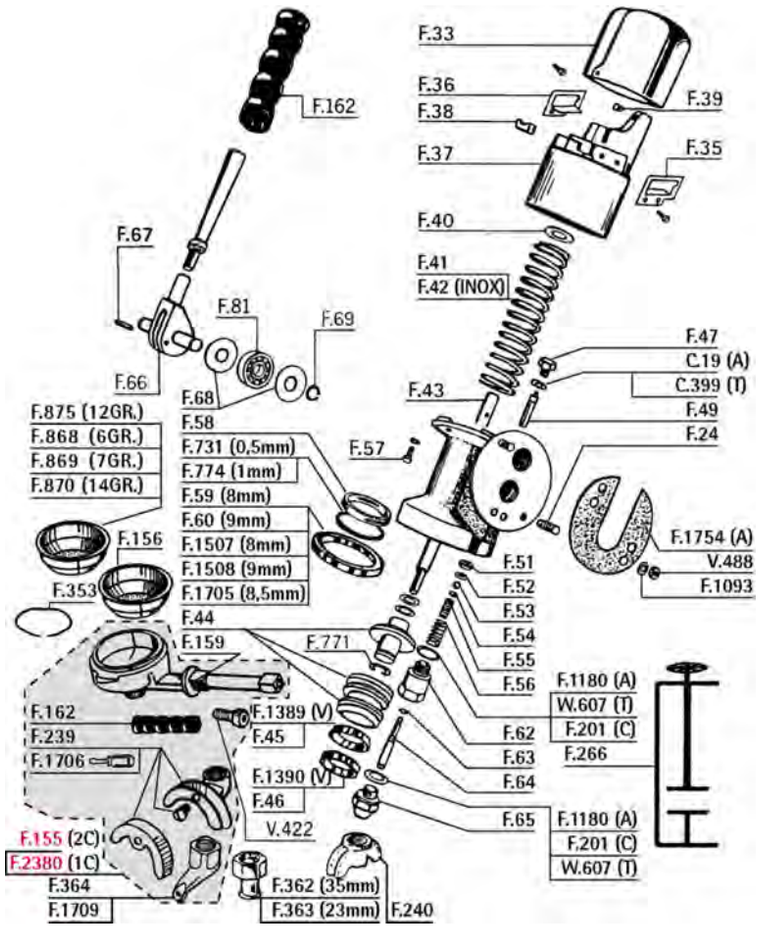

This **That**

IRREVERENT

NOT

This

That

CASUAL

NOT

This **That**

WRY

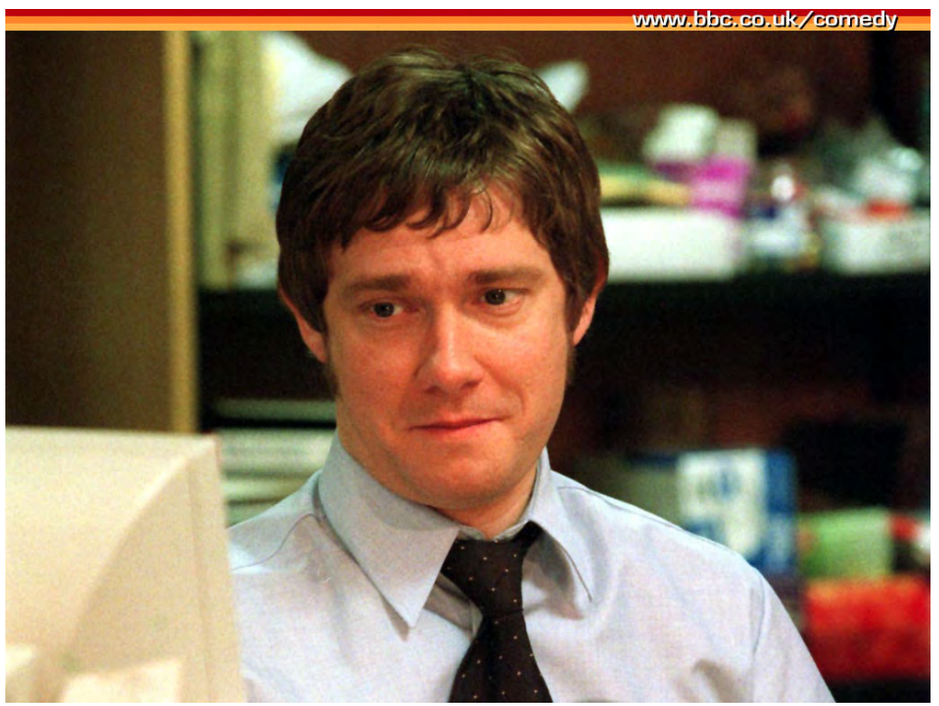

This

NOT

That

WITTY

NOT

This **That**

HONEST

NOT

This **That**