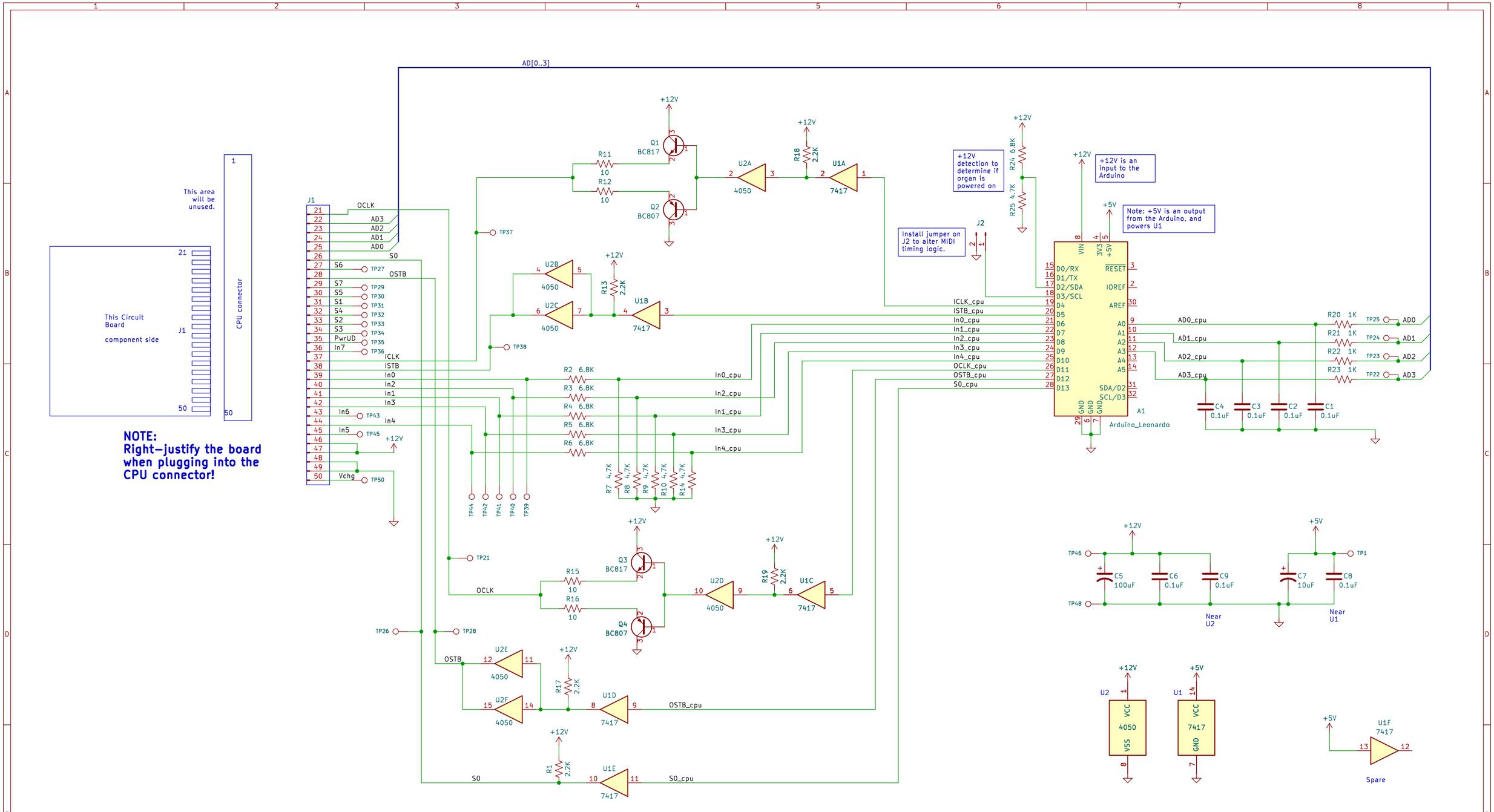

Drawn By: HGP

PINMAR Organs

Sheet: /

File: Rodgers890.kicad_sch

Title: Rodgers 890 CPU replacement implementing MIDI

Size: B	Date: 2023-07-19	**Rev: 0.1**
KiCad E.D.A. kicad (7.0.0-0)		Id: 1/1