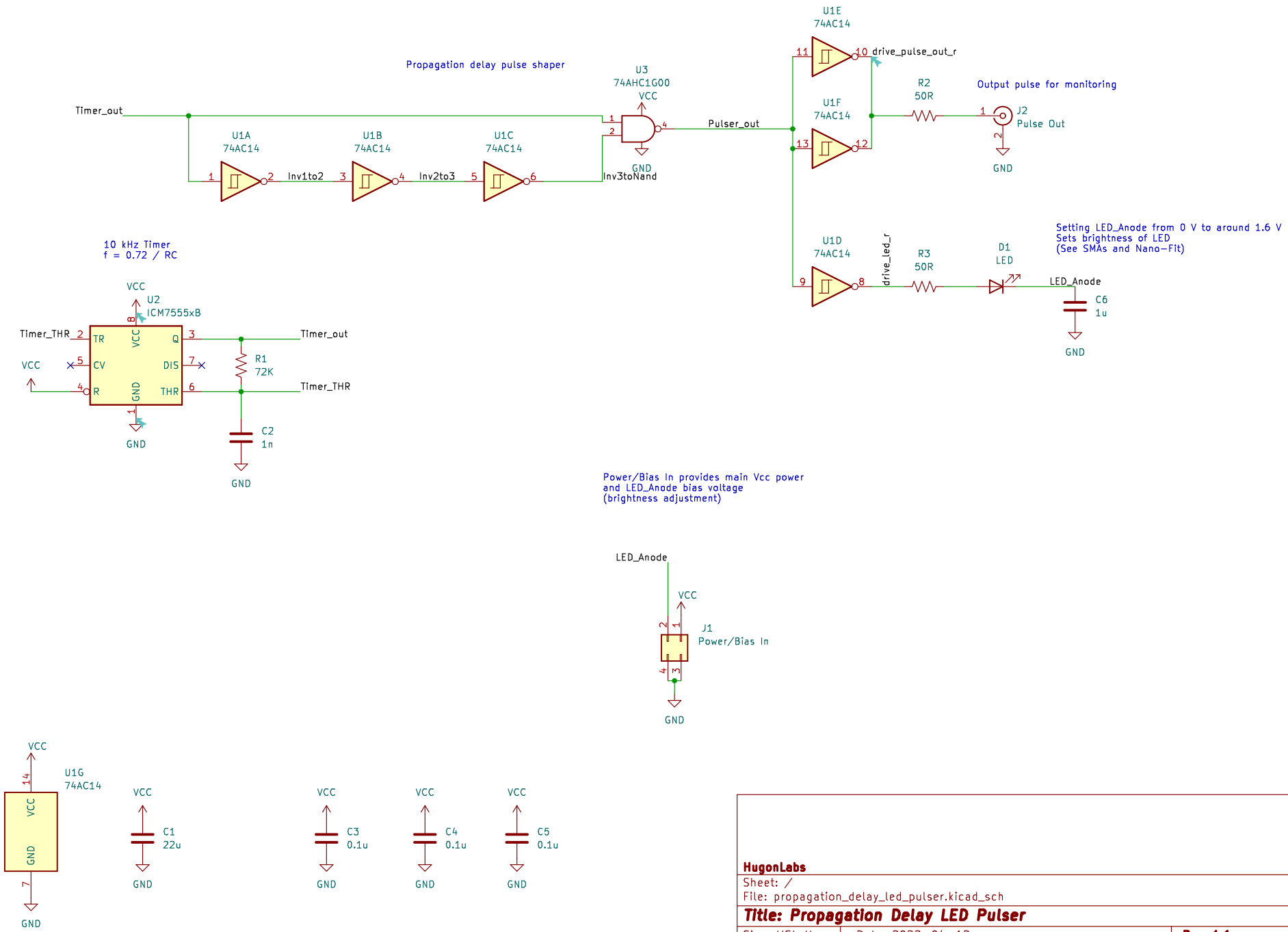

HugonLabs

Sheet: /

File: propagation_delay_led_pulser.kicad_sch

Title: Propagation Delay LED Pulser

Size: USLetter	Date: 2022-04-12	**Rev: 1.1**
KiCad E.D.A. kicad 6.0.4-6f826c9f35~116~ubuntu20.04.1		Id: 1/1