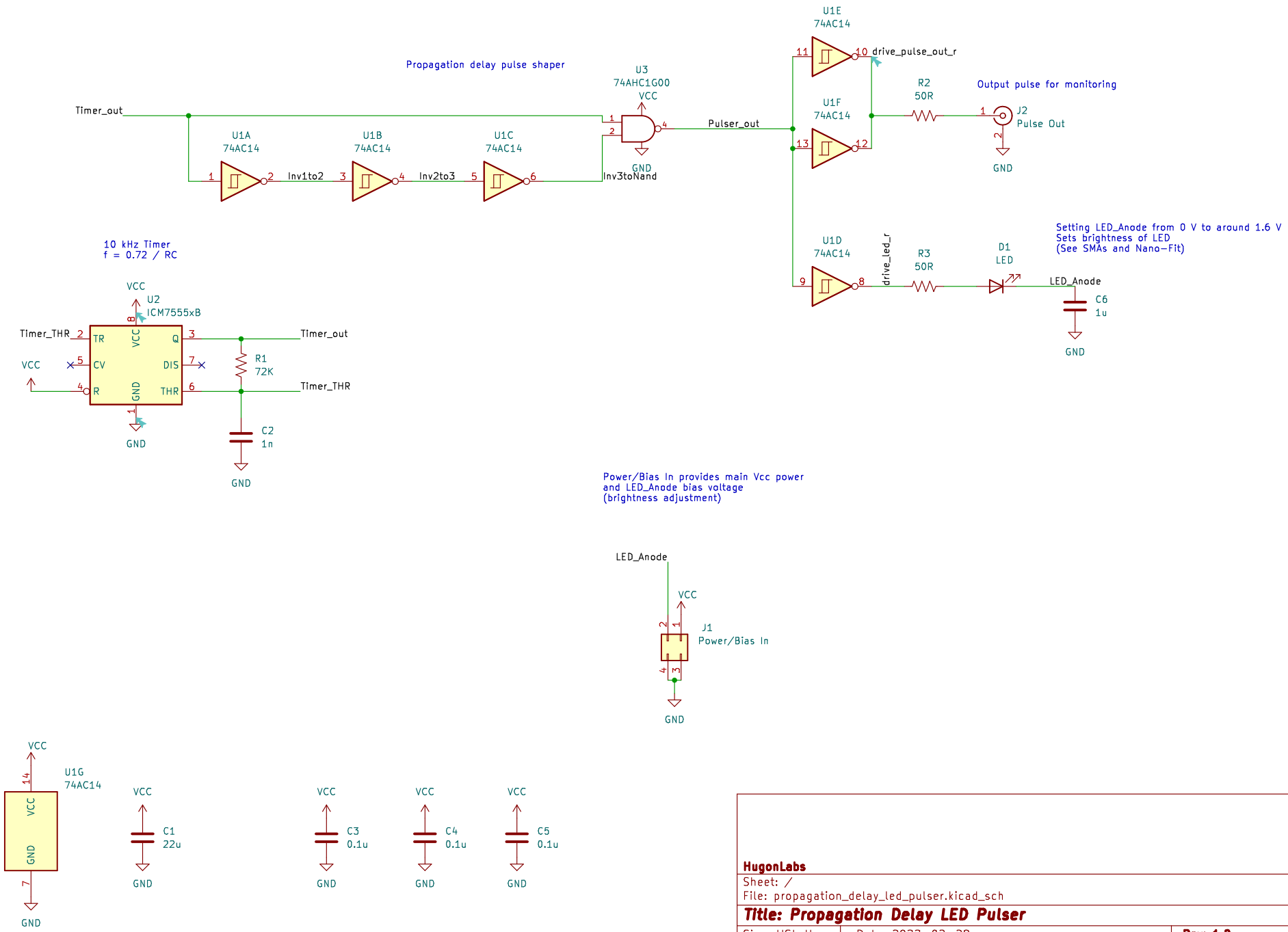

HugonLabs

Sheet: /

File: propagation_delay_led_pulser.kicad_sch

Title: Propagation Delay LED Pulser

Size: USLetter	Date: 2022-02-28	**Rev: 1.0**
KiCad E.D.A. kicad 6.0.2-378541aBeb~116~ubuntu20.04.1		Id: 1/1