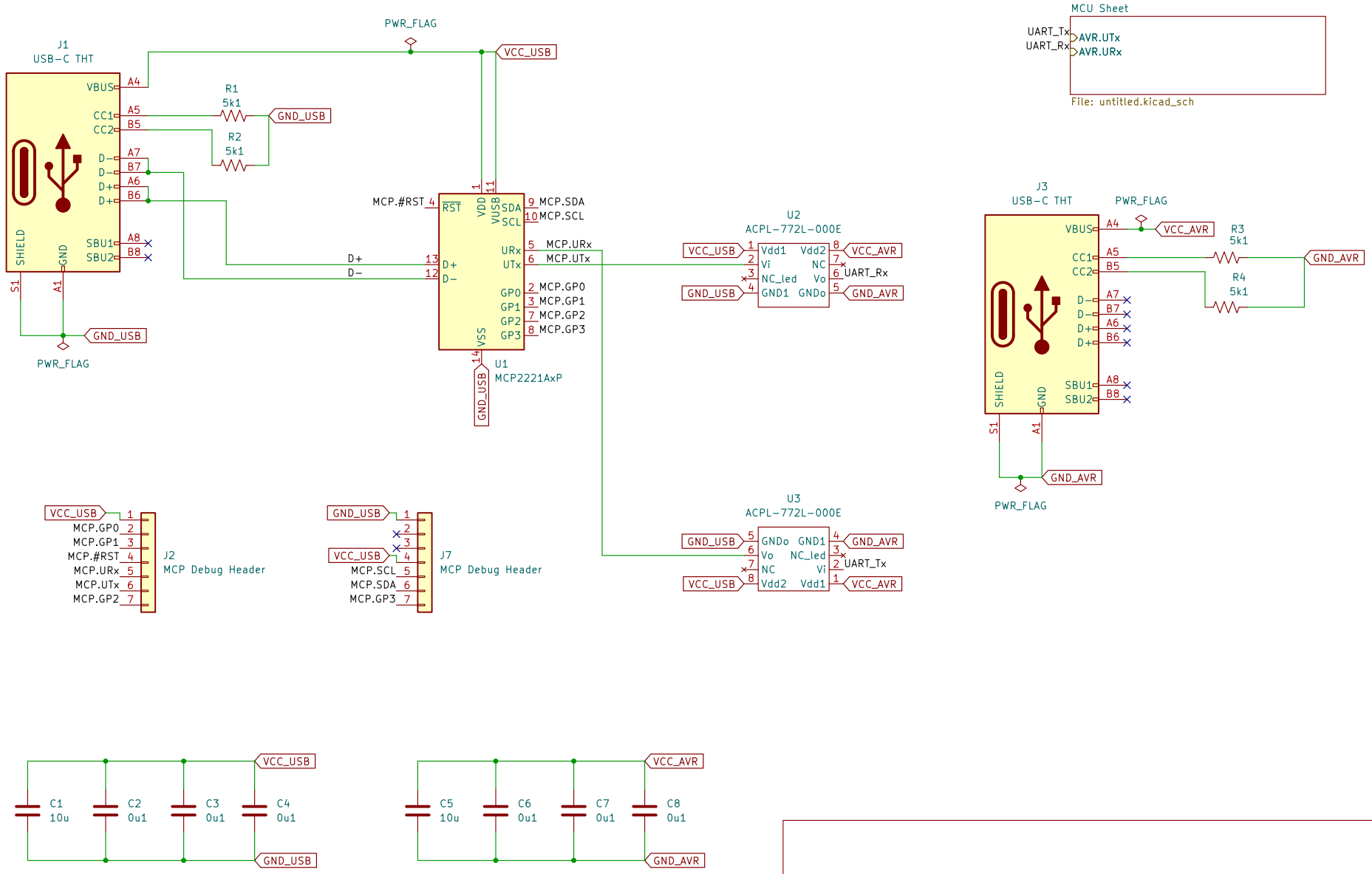

This version is all through-hole and has opto-isolators on the UART lines

HugonLabs

Sheet: /

File: avr328usbc.kicad_sch

Title: AVR328-USB

Size: USLetter	Date: 2024-03-28	**Rev: 1.0**
KiCad E.D.A. 8.0.1		Id: 1/2

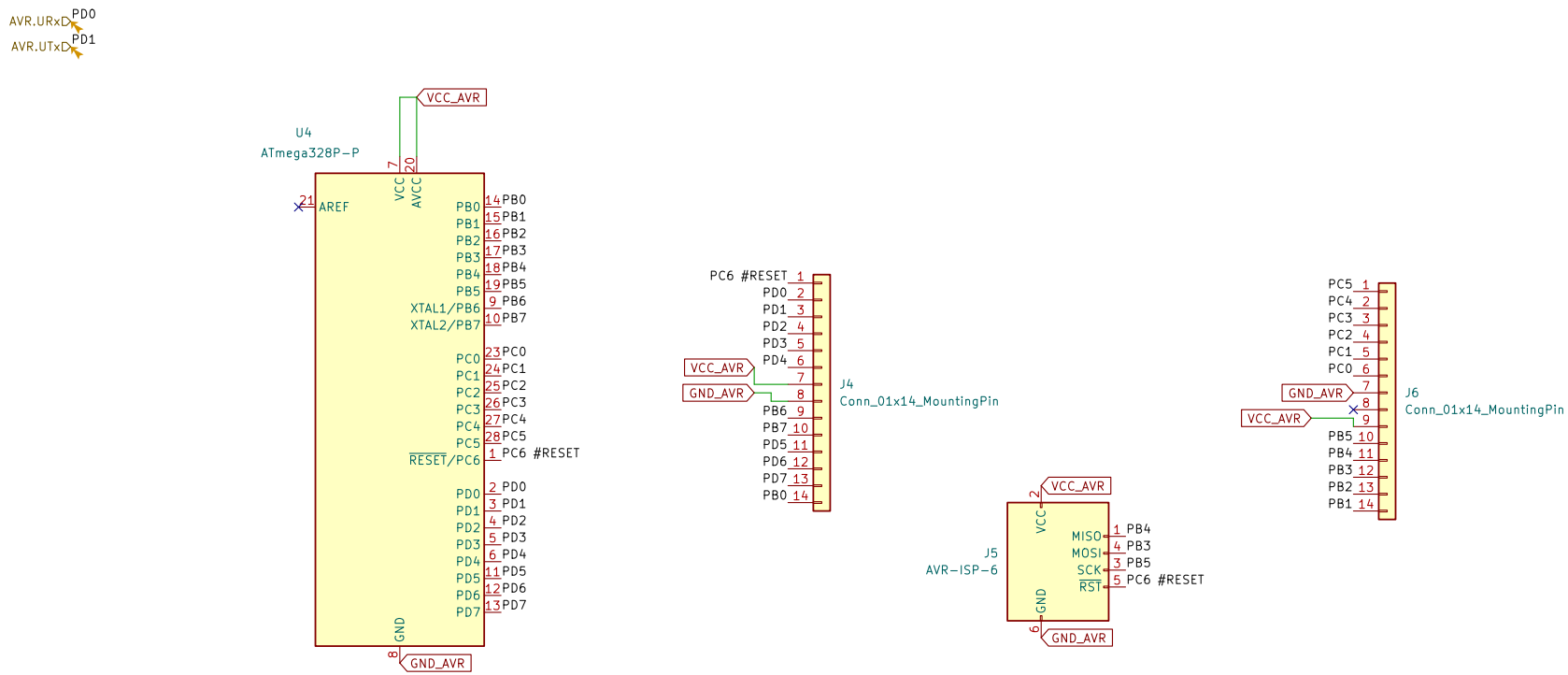

This version is all through-hole and has opto-isolators on the UART lines

HugonLabs

Sheet: /MCU Sheet/

File: untitled.kicad_sch

Title: AVR328-USB

Size: A4	Date: 2024-03-28	**Rev: 1.0**
KiCad E.D.A. 8.0.1		Id: 2/2