Item No.	Quantity	Part number	Material	Description
1	1	106-121-127-003	Hardened Carbon Steel	DOUBLE BEARING BASE
2	2	106-121-127-003	Bronze (8-14% Sn)	VIBRATION BUSHING
3	1	106-121-127-002	Hardened Carbon Steel	DOUBLE BEARING CAP
4	6	008-163-524-031	Hardened Carbon Steel	1/2-13 UNC-3C X 2 X 1-1/4 HEX CAP SCREW

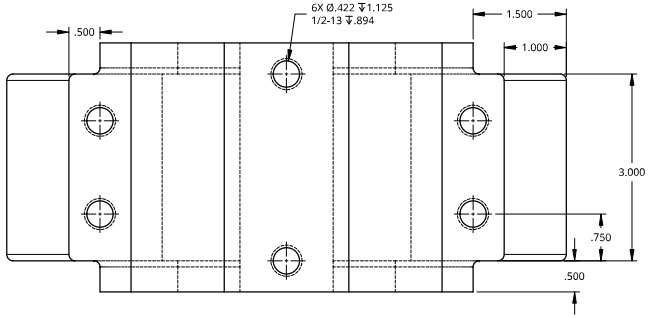

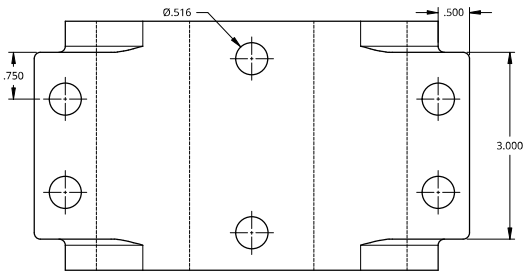

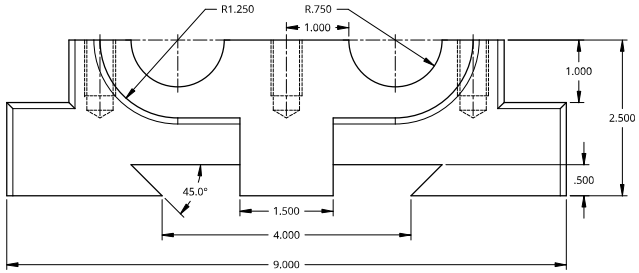

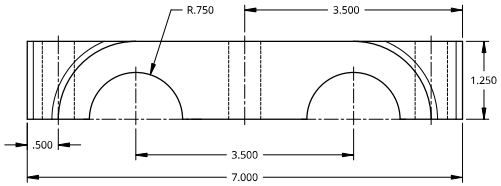

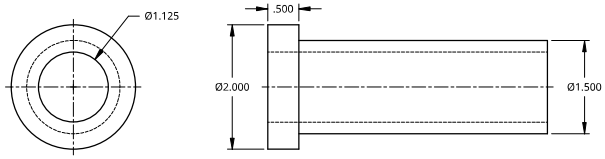

FILLETS AND ROUNDS 0.10

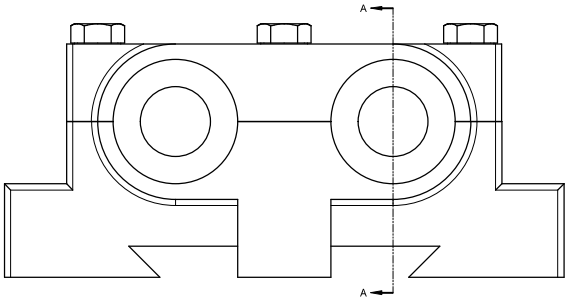

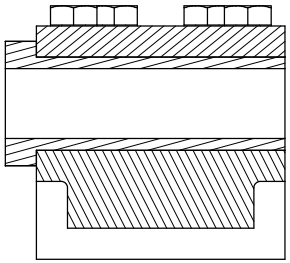

SECTION A - A

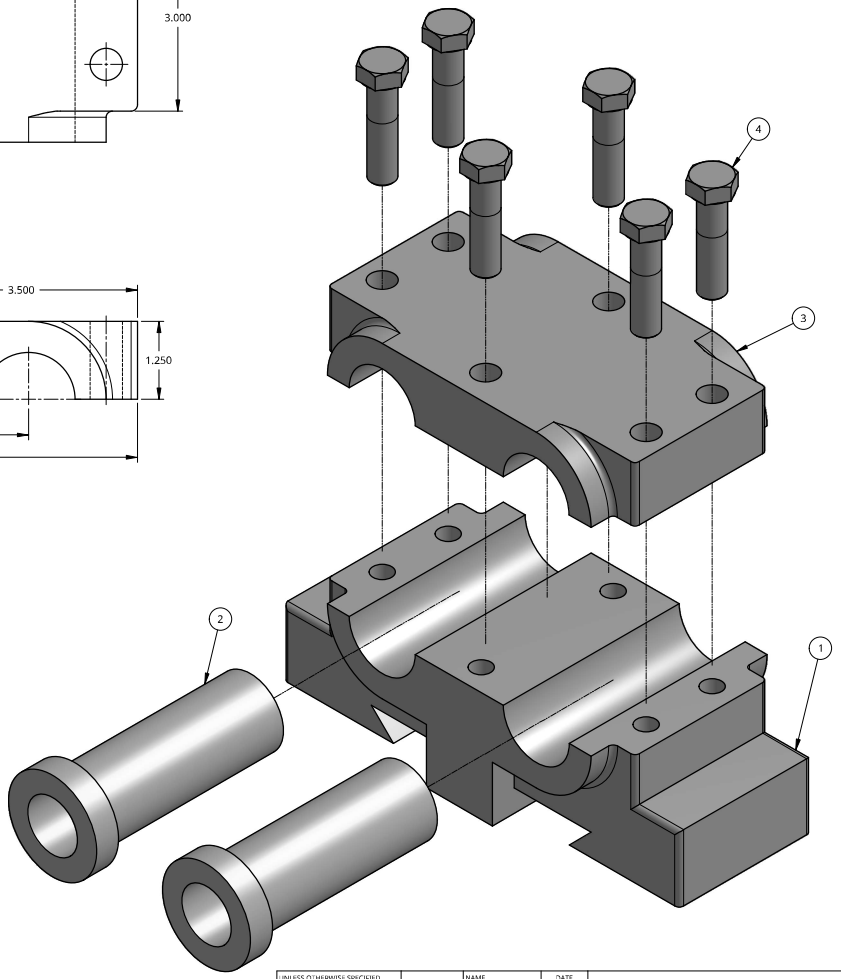

UNLESS OTHERWISE SPECIFIED, DIMENSIONS ARE IN INCHES
.XX = ±.0-
.XXX = ±.00-
.XXXX = ±.000-
ANGULAR = ± °
FRACTIONAL = ±
SURFACE FINISH

DO NOT SCALE DRAWING

BREAK ALL SHARP EDGES AND REMOVE BURRS

THIRD ANGLE PROJECTION

	NAME	DATE
DRAWN	JESSICA HUNTER	11/12/2020

CIBOLA HIGH SCHOOL
1510 ELLISON DR NW
ALBUQUERQUE, NM 87114

BASE

DESCRIPTION
DOUBLE BEARING BASE

SIZE	DWG NO.	REV
D	106-121-127-003	1

SCALE	MATERIAL	SHEET
1:1	SEE BOM	1 of 1