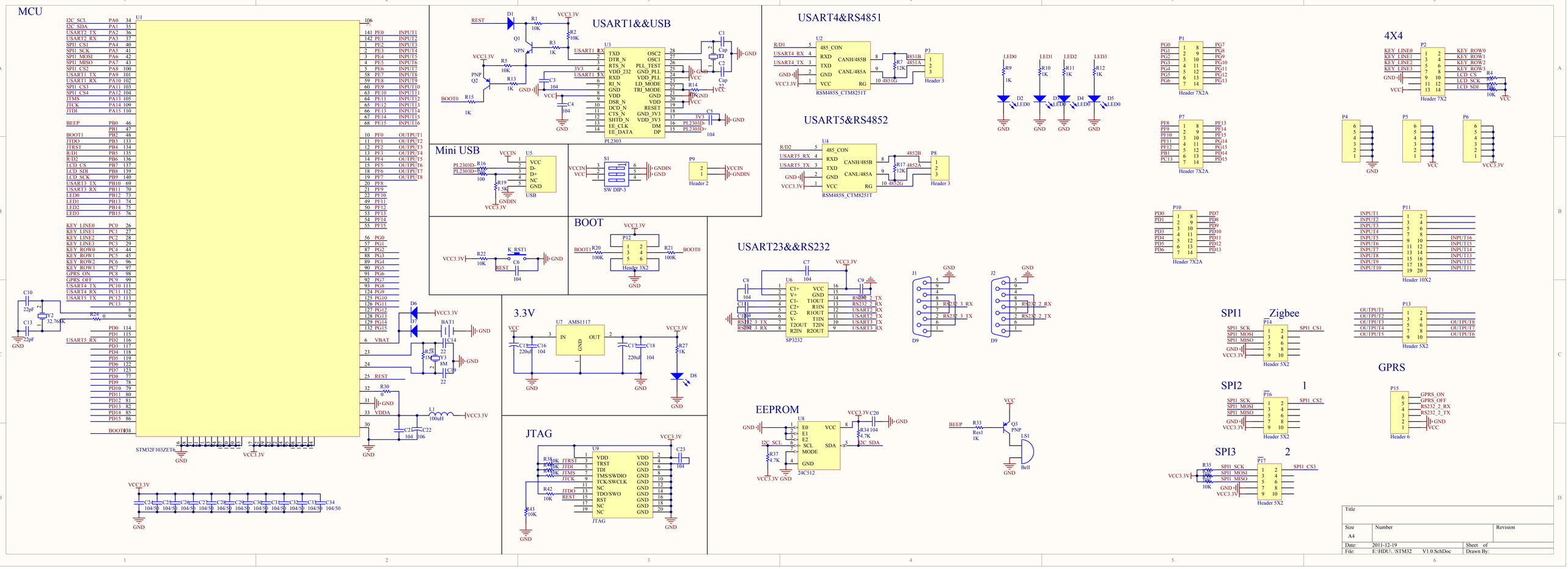
MCU
U1
STM32F103ZET6
USART1&&USB
U2
485_CON
RSM485S_CTM8251T
P3
Header 3
USART4&RS4851
U4
RSM485S_CTM8251T
P8
Header 3
USART5&RS4852
LED0
LED1
LED2
LED3
P1
Header 7X2A
P7
Header 7X2A
4X4
P2
Header 7X2
P4
P5
P6
Mini USB
U5
USB
S1
SW DIP-3
P9
Header 2
BOOT
P12
Header 3X2
P10
Header 7X2A
P11
Header 10X2
USART23&&RS232
U6
SP3232
J1
D9
J2
D9
3.3V
U7 AMS1117
SPI1
Zigbee
P14
Header 5X2
P13
Header 5X2
SPI2
1
P16
Header 5X2
GPRS
P15
Header 6
SPI3
2
P17
Header 5X2
EEPROM
U8
24C512
JTAG
U9
Q3
PNP
LS1
Bell
Title
Size
A4
Number
Revision
Date: 2011-12-19
Sheet of
File: E:\HDU\..\STM32 V1.0.SchDoc
Drawn By:

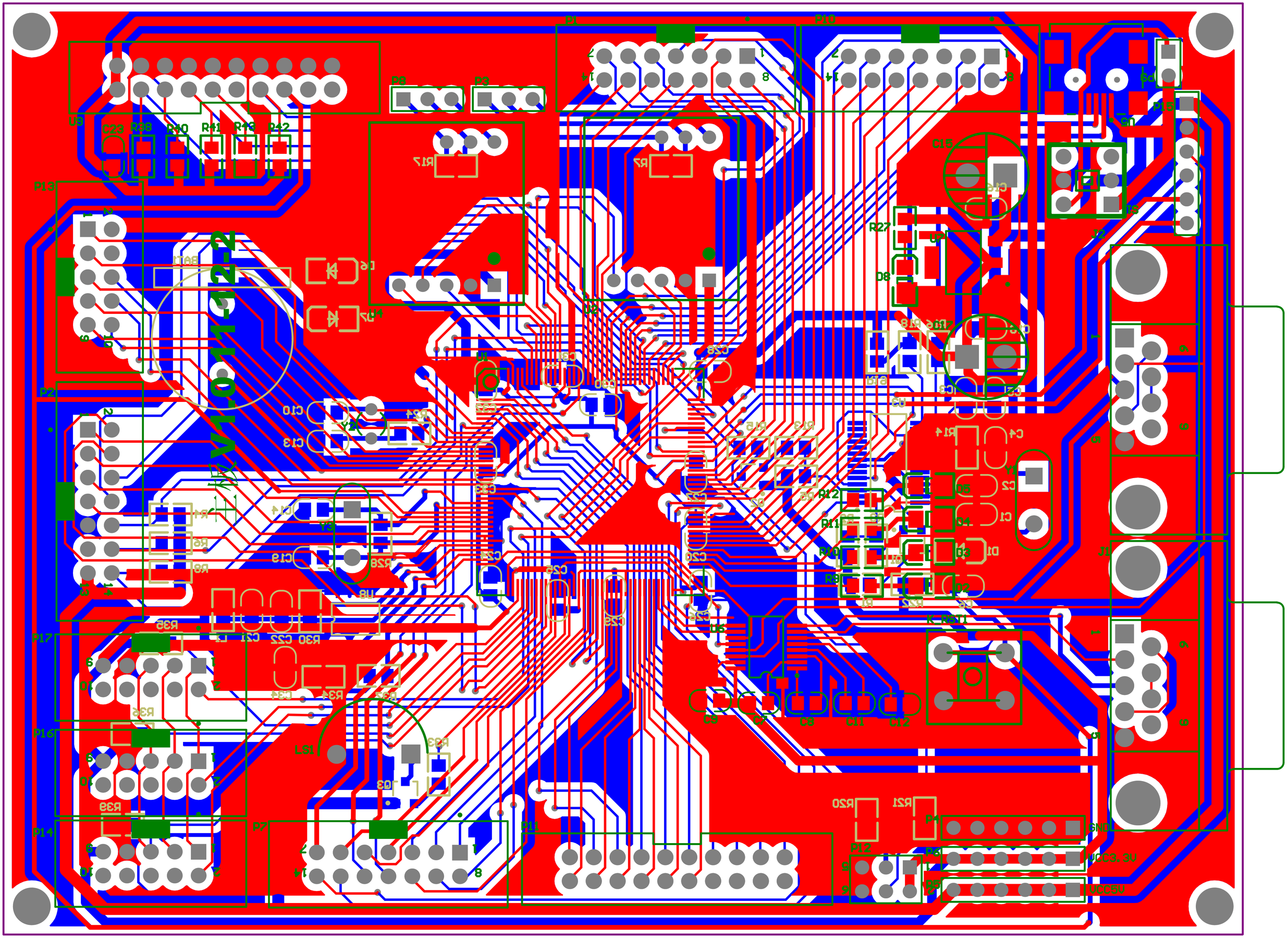
V1011-122
P1
P2
P3
P4
P5
P6
P7
P8
P9
P10
P11
P12
P13
P14
P15
P16
P17
J1
J2
U3
U4
U5
U6
U7
U8
U9
U10
U11
U12
U13
U14
U15
U16
U17
U18
U19
U20
U21
U22
U23
U24
U25
U26
U27
U28
U29
U30
U31
U32
U33
U34
U35
U36
U37
U38
U39
U40
U41
U42