NanoPi NEO

Revision

1606 , First Release
V1.1 1607, Replace MIC&LINEOUT with I2S/PCM on CON2
V1.2 1608, Use DC/DC (U7) for VDD1V2-SYS
V1.3 1702, Use DC/DC(U25) for VDD-CPUX
V1.31 1703, Change TFCard(MicroSD) footprint
V1.4 1801, Added TV-OUT

FRIENDLY ELEC

NanoPi NEO		
Size A3	Document Number 01:Title	Rev V1.4 1801
Date: Tuesday, January 30, 2018	Sheet 1 of 12	

BLOCK

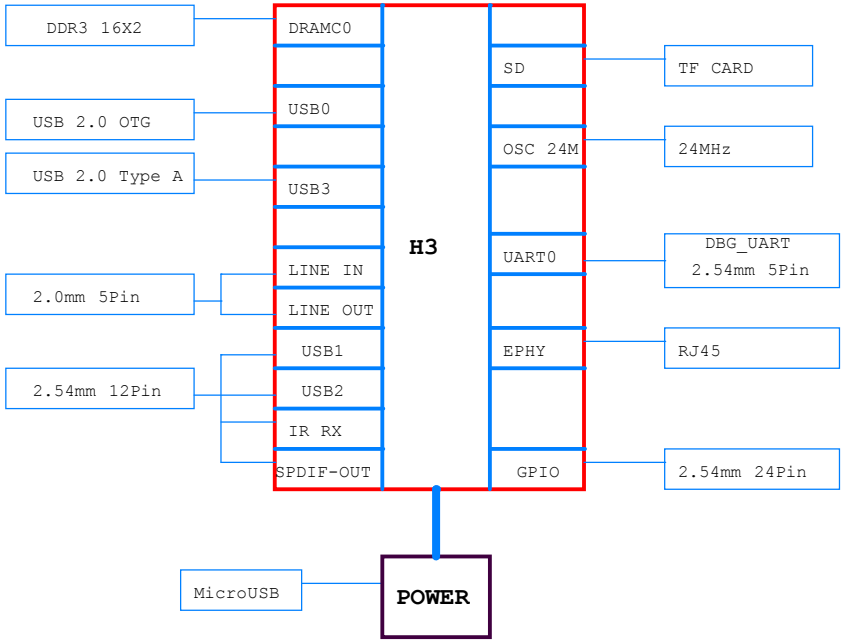

FRIENDLY ELEC

NanoPi NEO		
Size A3	Document Number 02:BLOCK	Rev V1.4 1801
Date: Tuesday, January 30, 2018	Sheet 2 of 12	

POWER TREE

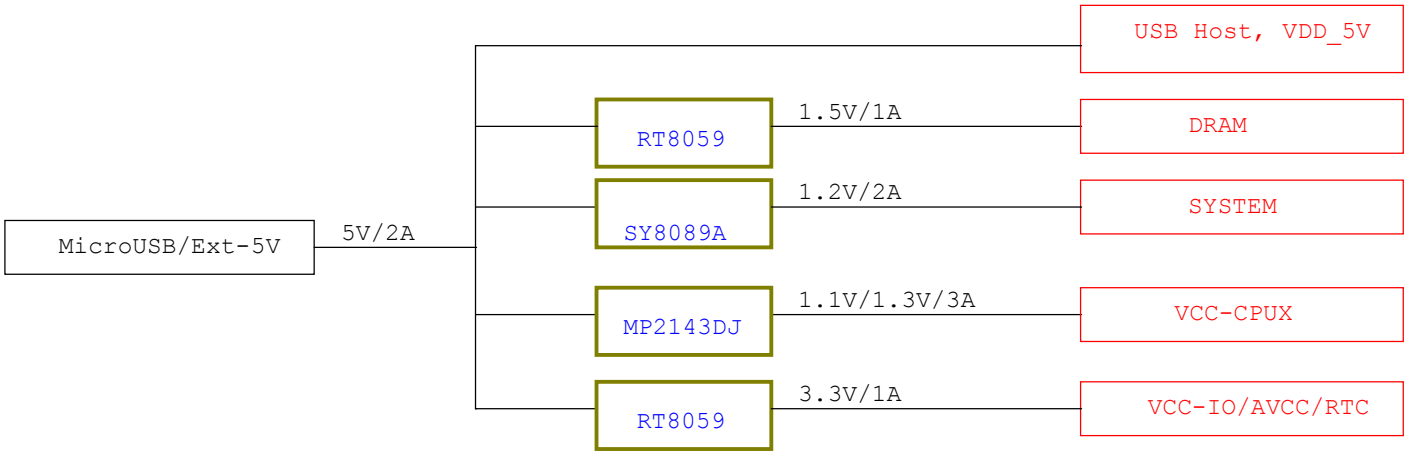

FRIENDLY ELEC

NanoPi NEO		
Size A3	Document Number 03:POWER TREE	Rev V1.4 1801
Date: Tuesday, January 30, 2018	Sheet 3 of 12	

DDR3 16x1

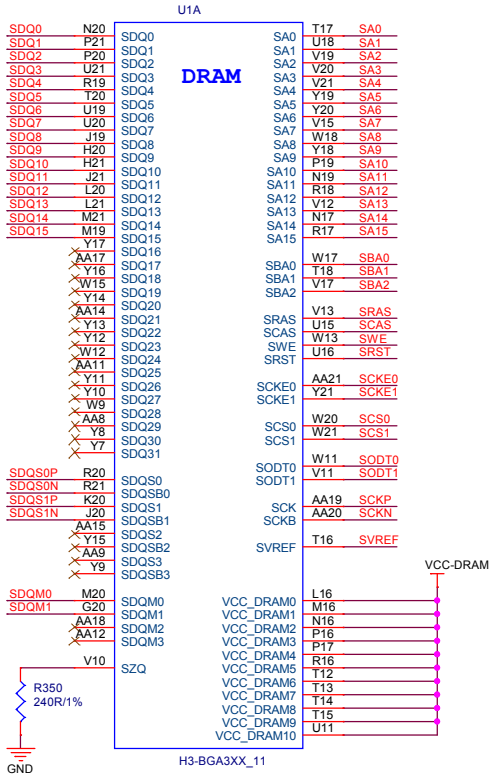

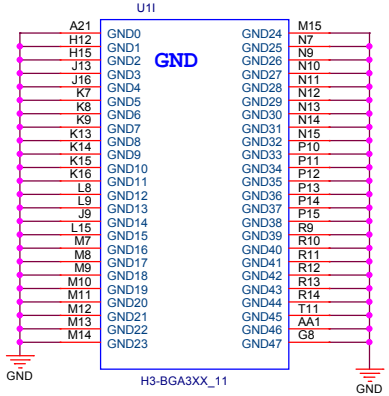

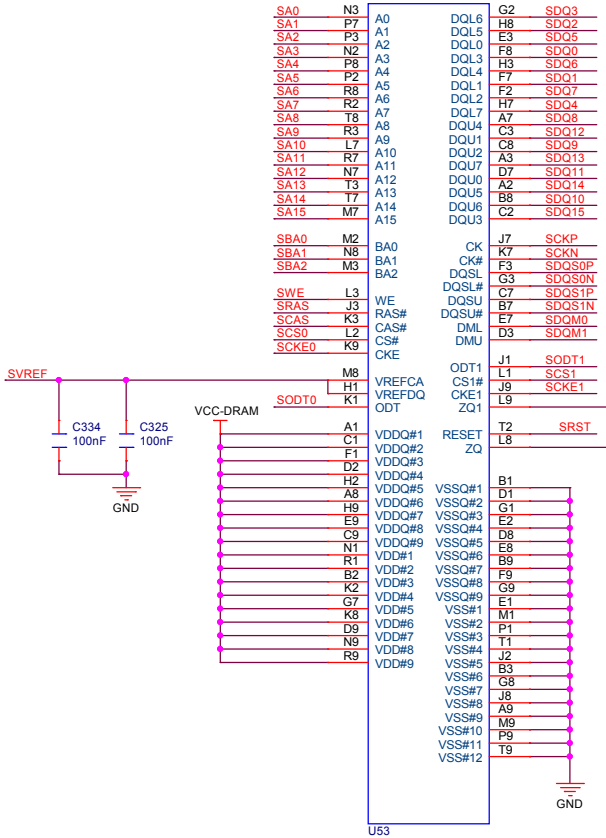

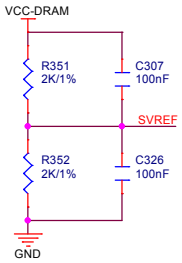

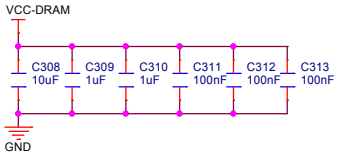

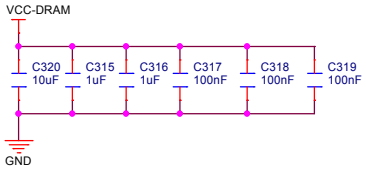

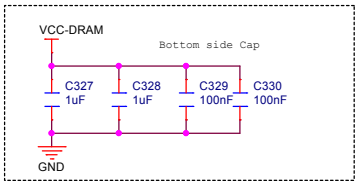

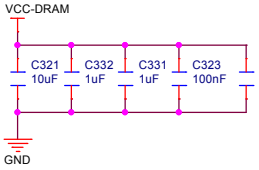

FRIENDLY ELEC

NanoPi NEO		
Size A3	Document Number 04:DDR3 16x1	Rev V1.4 1801
Date: Tuesday, January 30, 2018	Sheet 4 of 12	

CPU 01

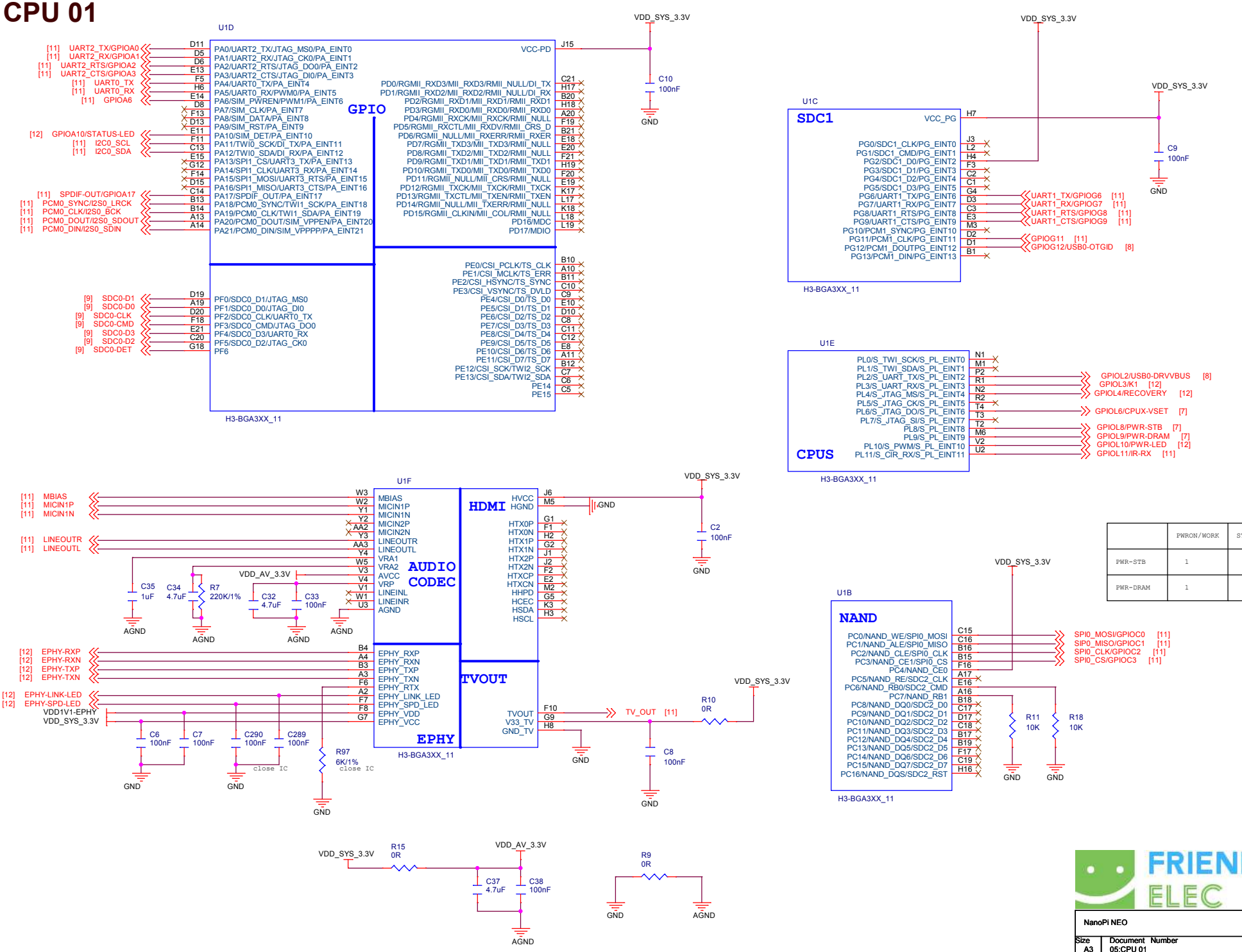

	PWRON/WORK	STANDBY	PWROFF
PWR-STB	1	0	0
PWR-DRAM	1	1	0

FRIENDLY ELEC

NanoPi NEO		
Size A3	Document Number 05:CPU 01	Rev V1.4 1801
Date: Tuesday, January 30, 2018	Sheet 5 of 12	

CPU 02

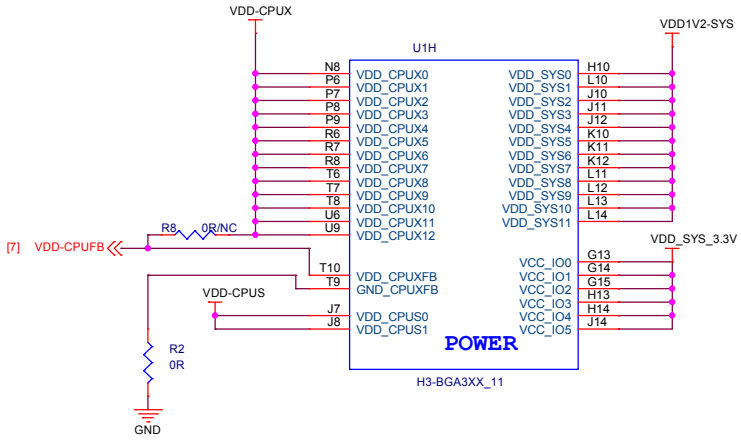

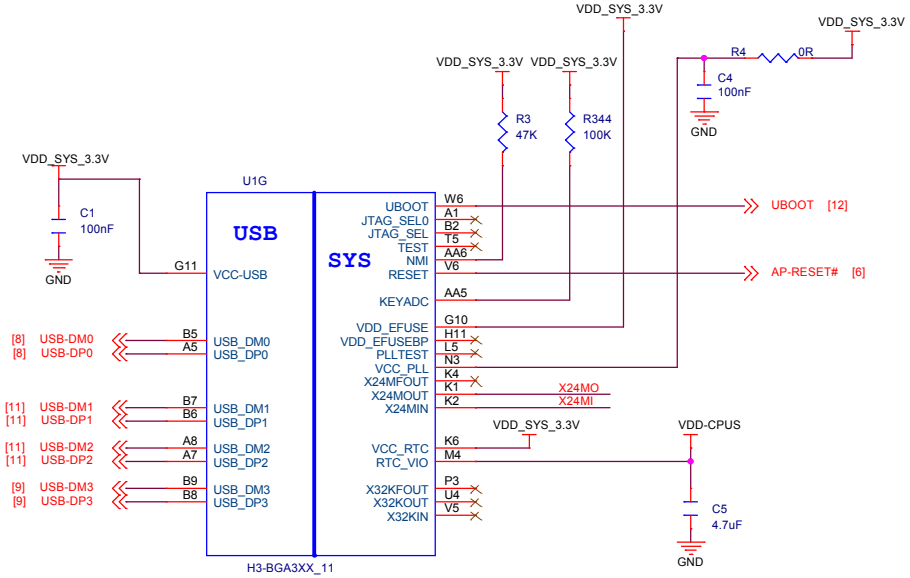

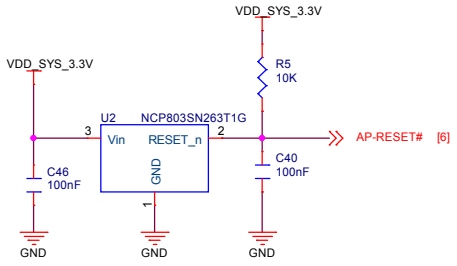

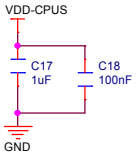

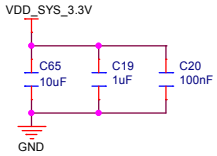

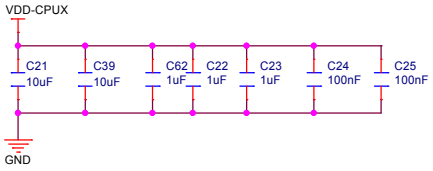

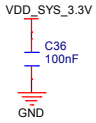

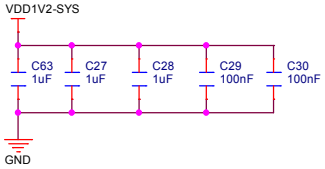

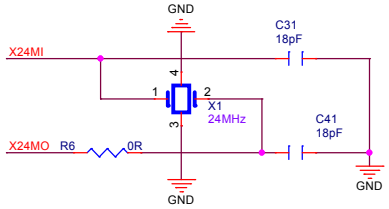

FRIENDLY ELEC

NanoPi NEO		
Size A3	Document Number 06:CPU 02	Rev V1.4 1801
Date: Tuesday, January 30, 2018	Sheet 6 of 12	

POWER 01

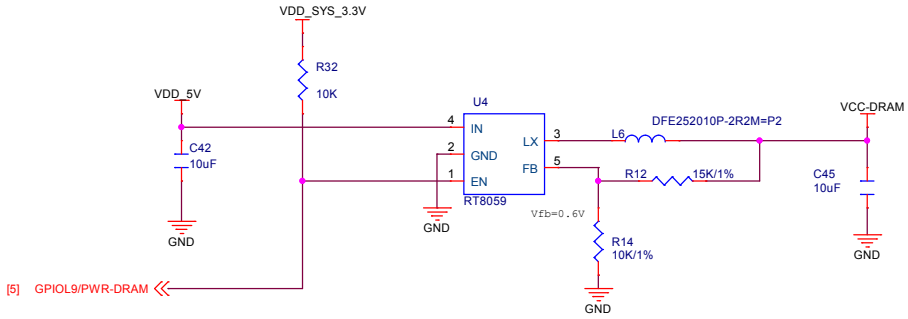

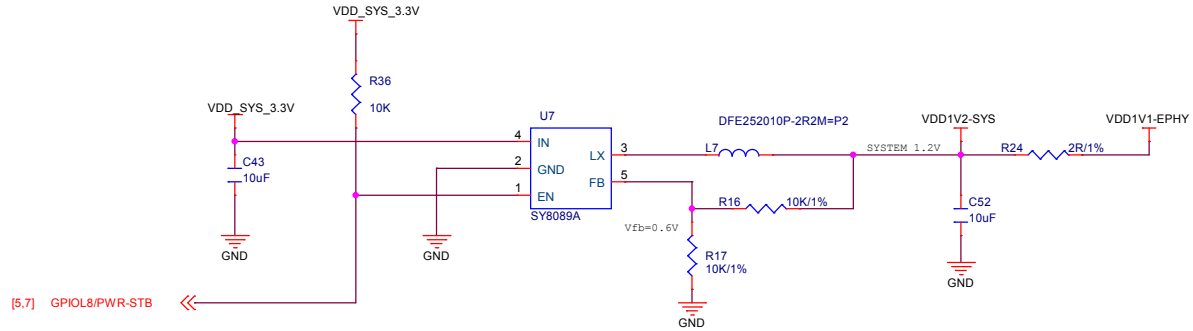

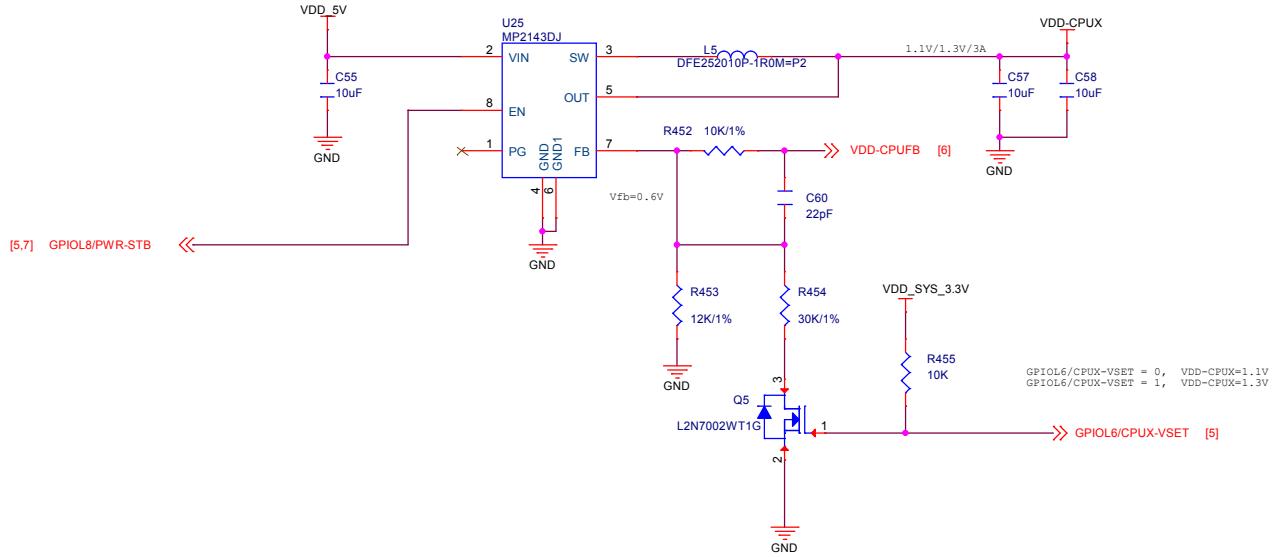

FRIENDLY ELEC

NanoPi NEO		
Size A3	Document Number 07:POWER 01	Rev V1.4 1801
Date: Thursday, October 24, 2019	Sheet 7 of 12	

POWER 02

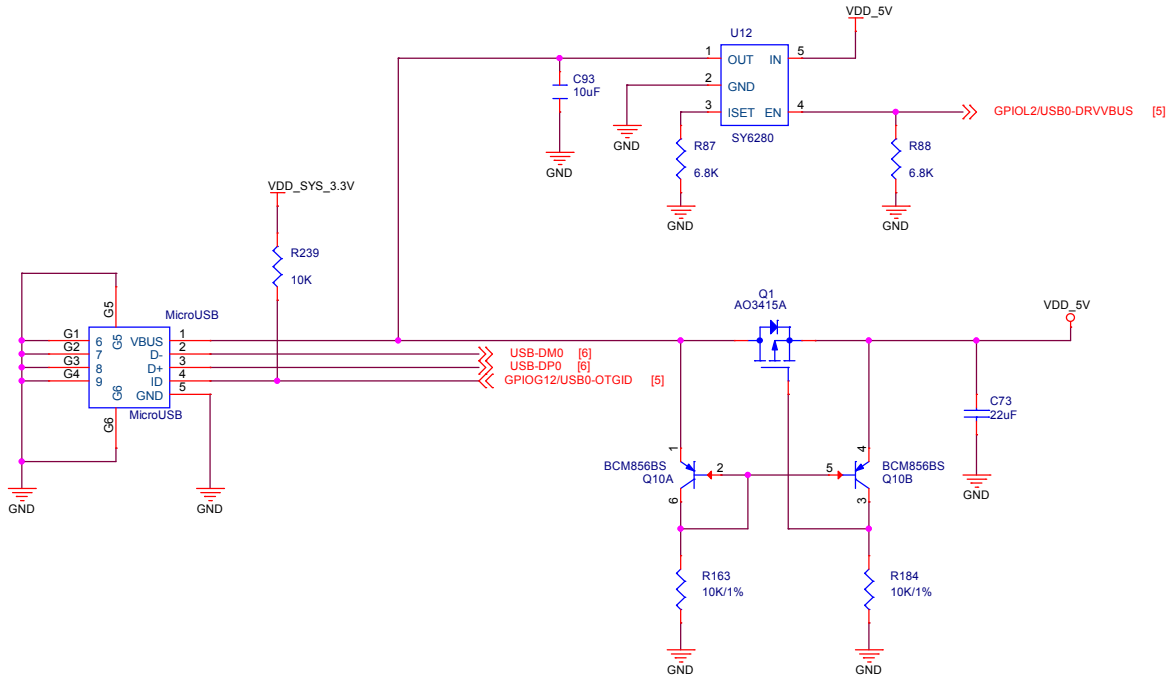

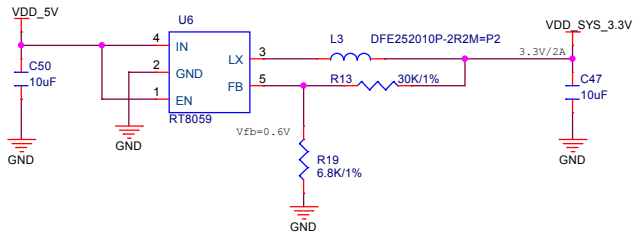

NanoPi NEO		
Size A3	Document Number 08:POWER 02	Rev V1.4 1801
Date: Tuesday, January 30, 2018	Sheet 8 of 12	

TF,USB Host

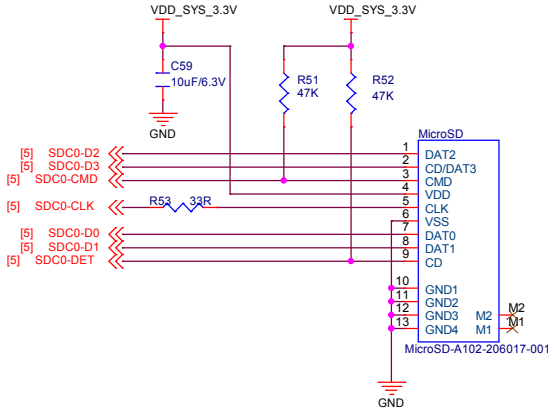

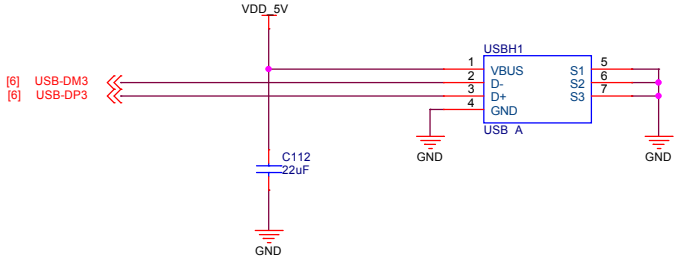

FRIENDLY ELEC

NanoPi NEO		
Size A3	Document Number 09:TF,USB Host	Rev V1.4 1801
Date: Friday, February 02, 2018	Sheet 9 of 12	

GPIO,Audio

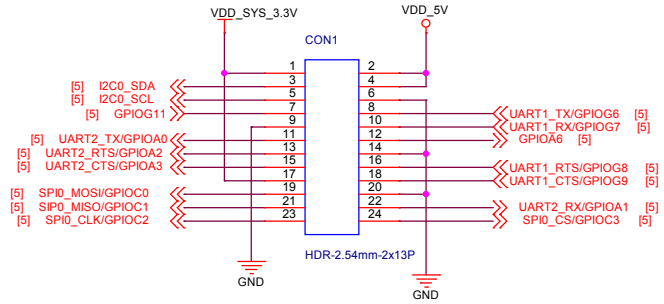

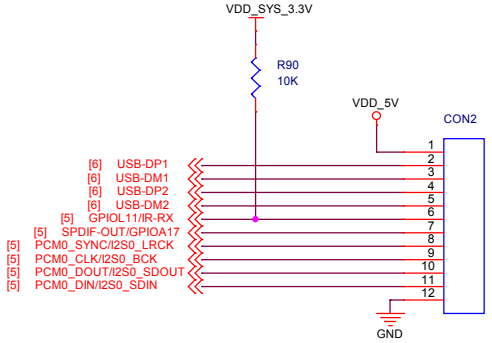

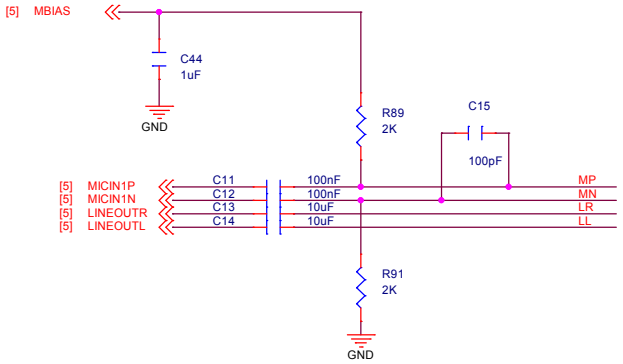

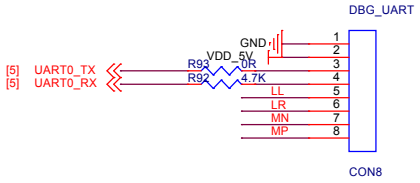

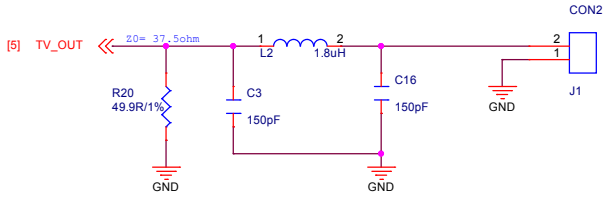

FRIENDLY ELEC

NanoPi NEO		
Size A3	Document Number 11:GPIO,Audio	Rev V1.4 1801
Date: Sunday, April 28, 2019	Sheet 11 of 12	

LEDs, LAN

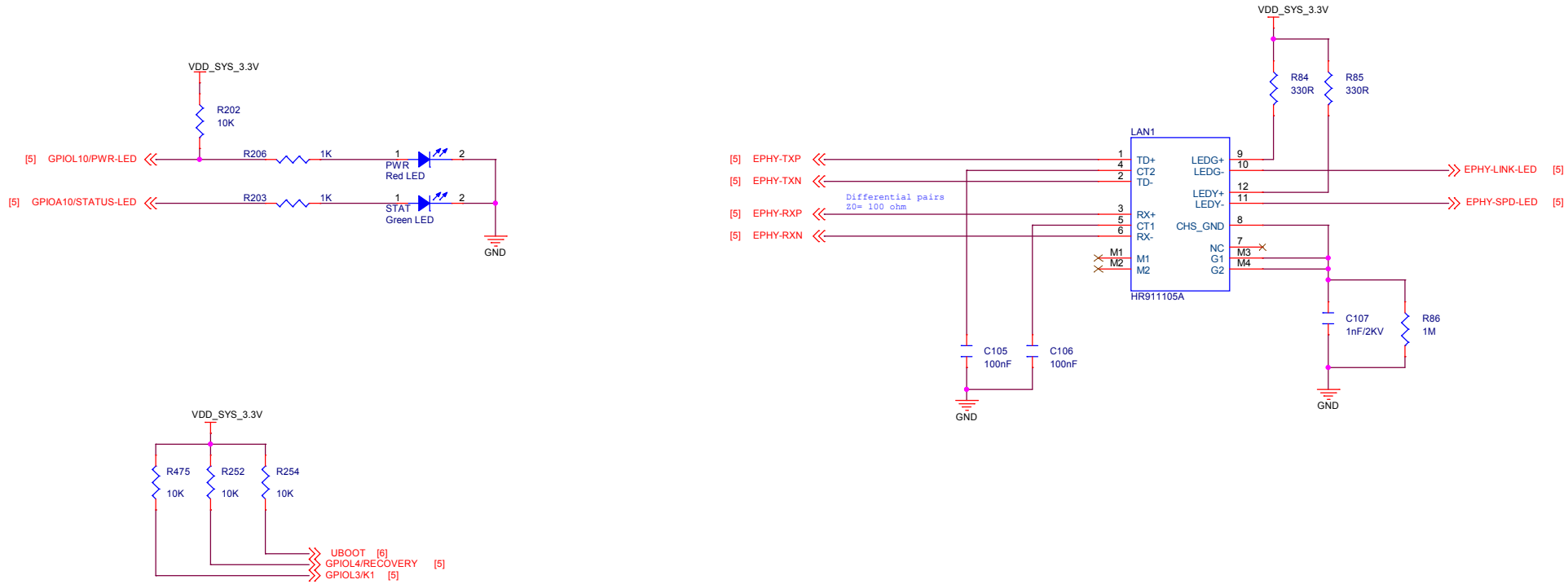

FRIENDLY ELEC

NanoPi NEO		
Size A3	Document Number 12:LEDs, LAN	Rev V1.4 1801
Date: Tuesday, January 30, 2018	Sheet 12 of 12	