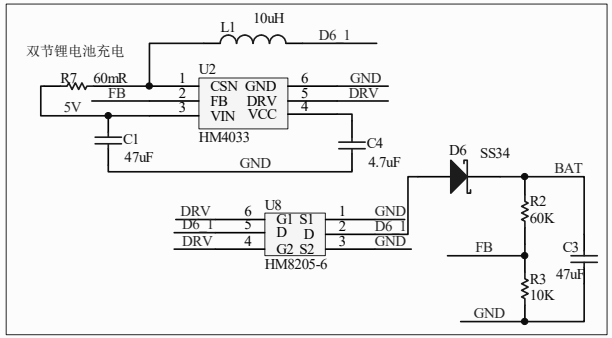

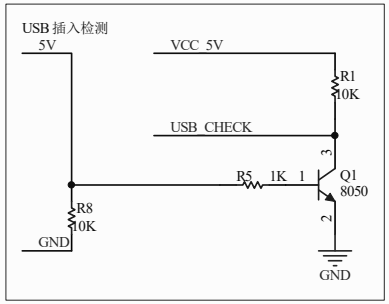

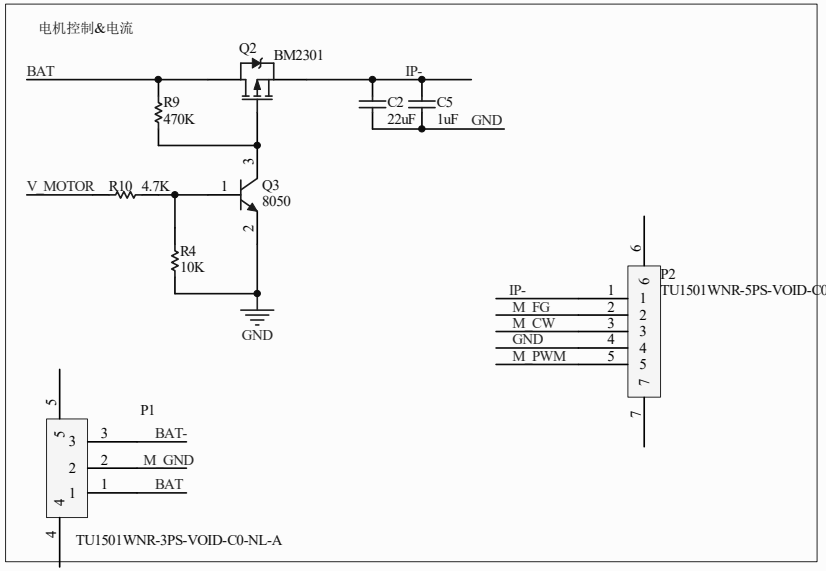

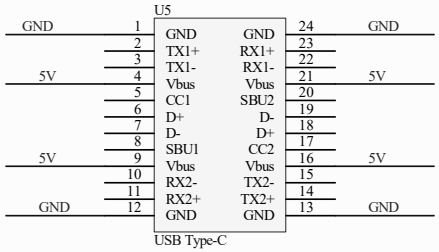

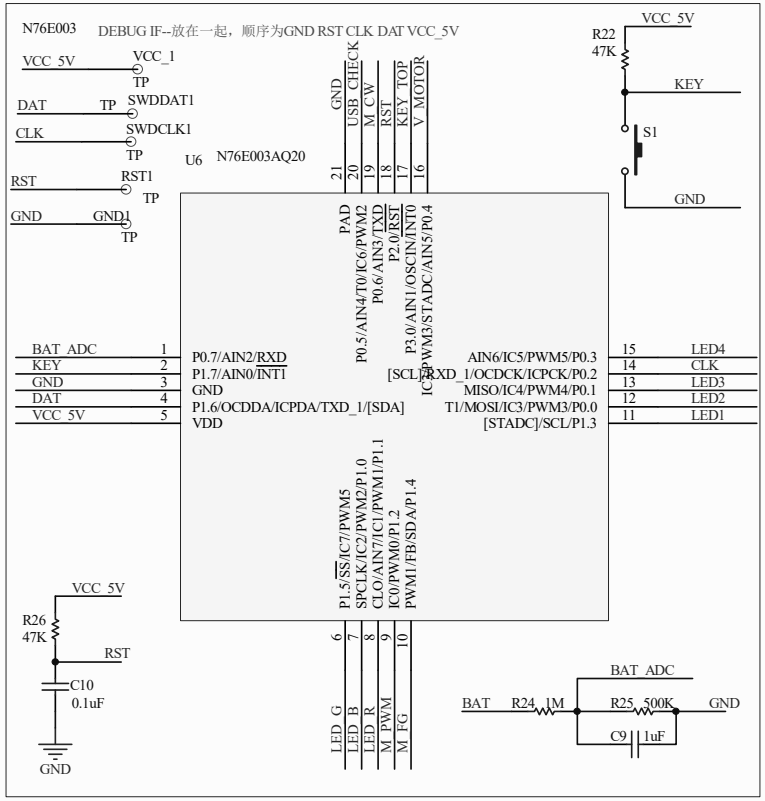

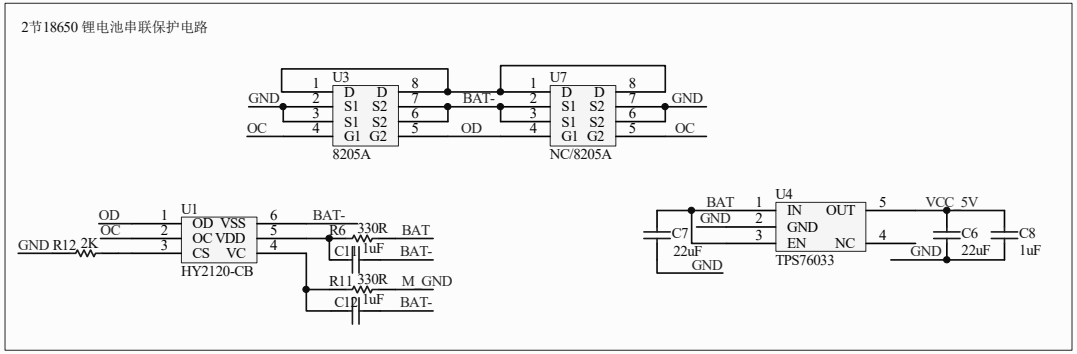

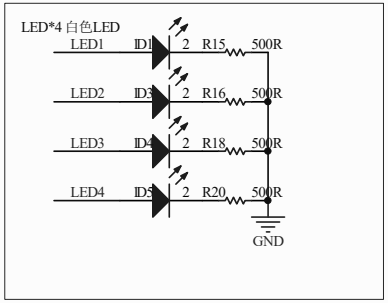

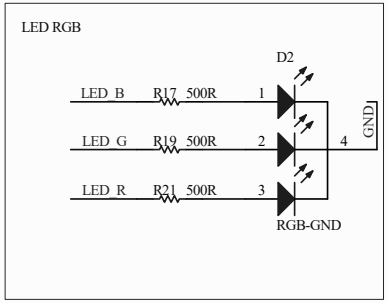

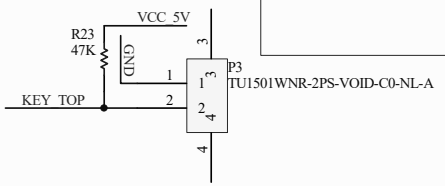

Title		
Size A3	Number	Revision
Date: 2019/4/22		Sheet of
File: F:\workplace\..\风扇_V1.7.SchDoc		Drawn By: