Front limit hight

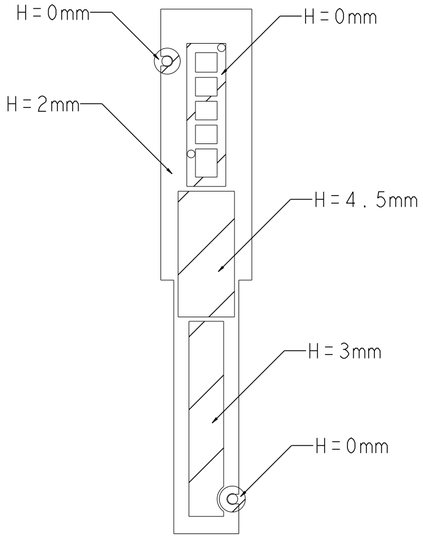

Front Component

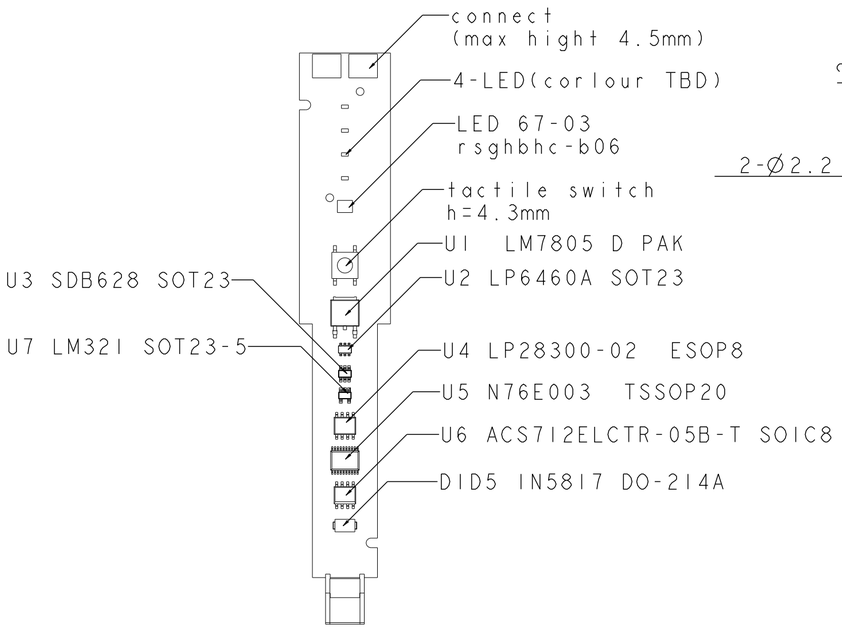

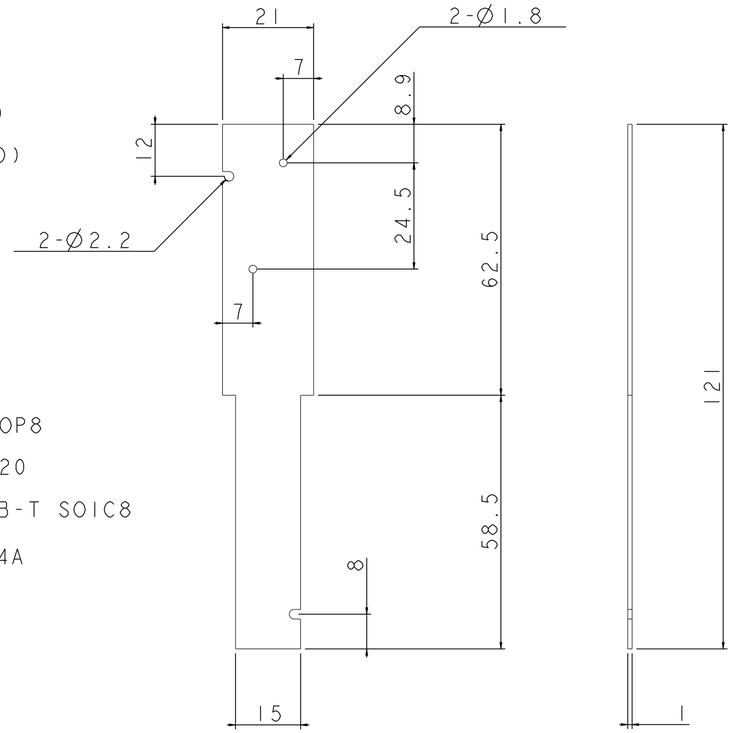

Back limit hight

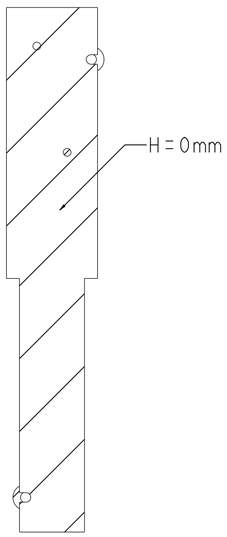

Back Component

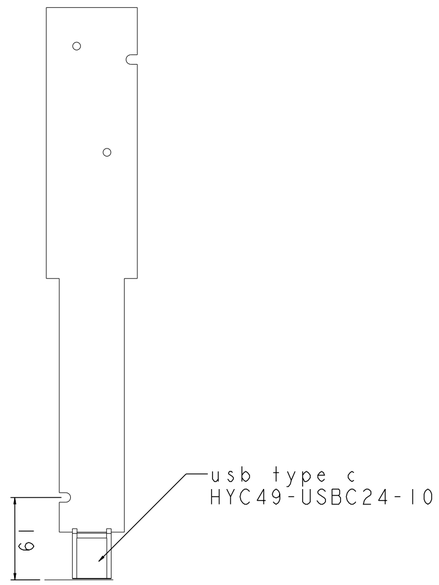

SYM	DOCUMENT NO.	DATE	DESCRIPTION	REVISED	CHECKED	APPROVED

THIS DRAWING CONTAINS INFORMATION IS PROPRIETARY TO CREB INCORPORATION AND SHOULD NOT BE USED WITHOUT WRITTEN PERMISSION.

Over	To	Unspecified Tolerance: ±mm A	B	C	D	ANGLE
0	5	±0.02	±0.05	±0.1		0°~30° ±0.1°
5	10	±0.05	±0.1	±0.15		31°~60° ±0.3°
10	50	±0.1	±0.15	±0.2		61°~90° ±0.5°
50	100	±0.15%	±0.2%	±0.25%		
100		±0.15%	±0.2%	±0.25%		

UNIT mm | SCALE 1/1

MATERIAL	PCB	MODEL	
FINISH		FILE NAME	MAIN_BOARD_PCB
DRAWN		P/N	
DESIGNER		DATE	Nov-20-18
CHECKED		REV	V01
APPROVED		SHEET	1 of 1
		Size	A2

CREBDESIGN