5.1

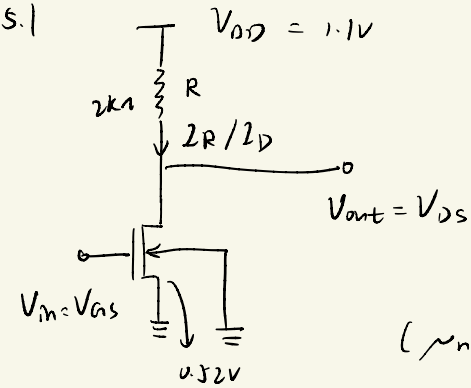

$(\mu_n C_{ox} = 216\ \mu A/V^2)$

(a) 求 $\frac{W}{L}$

当 $V_{out} = V_{OL} = 0.05V$，假设 $V_{in} = V_{OH} = V_{DD} = 1.1V$

$$I_R = \frac{V_{DD} - V_{out}}{R} = \frac{k_n}{2}\left(\frac{1}{1+\frac{V_{OL}}{E_C L_n}}\right)\left(2(V_{DD} - V_{T0})V_{OL} - V_{OL}^2\right)$$

$V_{OL} \approx 0$，则有：

$$I_R = \frac{V_{DD} - V_{out}}{R} = \frac{1}{2}\mu_n C_{ox}\cdot\left(\frac{W}{L}\right)\left(2(V_{DD} - V_{T0})V_{OL} - V_{OL}^2\right)$$

$$\frac{1.1 - 0.05}{2\times10^3} = \frac{1}{2}\times 216\times10^{-6}\left(\frac{W}{L}\right)\left(2\times(1.1-0.52)\times0.05 - 0.05^2\right)$$

$$1.099975 = 108\times10^{-6}\left(\frac{W}{L}\right)\times0.0555$$

$$\frac{W}{L} = 87.587$$

(b) 求 V_{IL} 和 V_{IH}

$$V_{IL} = V_{T0} + \frac{1}{k_n R} = 0.52 + \frac{1}{216\times10^{-6}\left(\frac{W}{L}\right)\times2\times10^3} = 0.5464V$$

$$V_{IH} = V_{T0} + \sqrt{\frac{8}{3}\frac{V_{DD}}{k_n R}} - \frac{1}{k_n R}$$

$$= 0.527 + \sqrt{\frac{8}{3} \times \frac{1.1}{216\times10^{-6} \times 87.587 \times 2\times10^{-3}}} - \frac{1}{216\times10^{-6} \times 87.587 \times 2\times10^{-3}}$$

$$= 0.772\ V$$

(c)

$$NM_L = V_{IL} - V_{OL} = 0.5464 - 0.05 = 0.4964\ V$$

$$NM_H = V_{OH} - V_{IH} = 1.1 - 0.7720 = 0.3280\ V$$

5.2

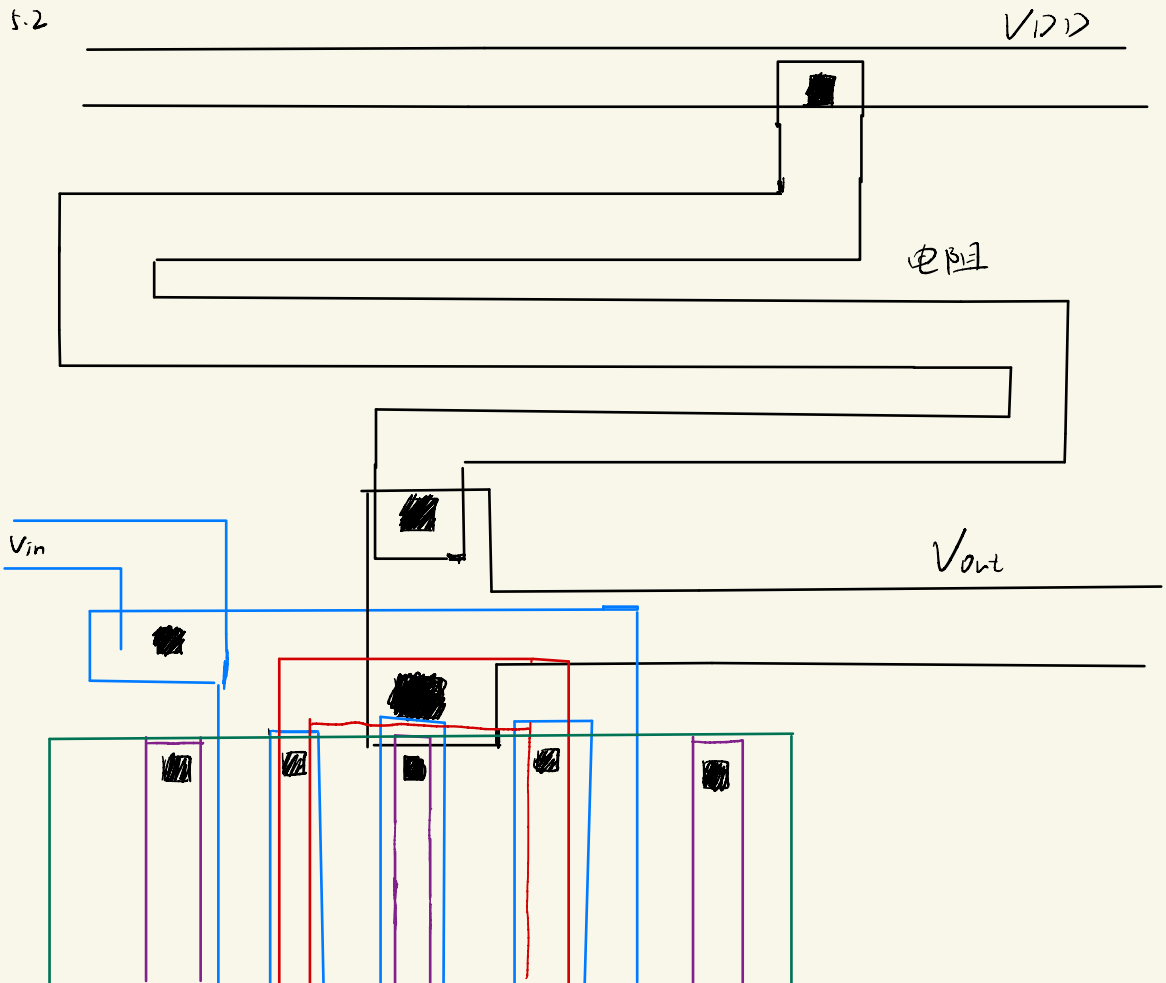

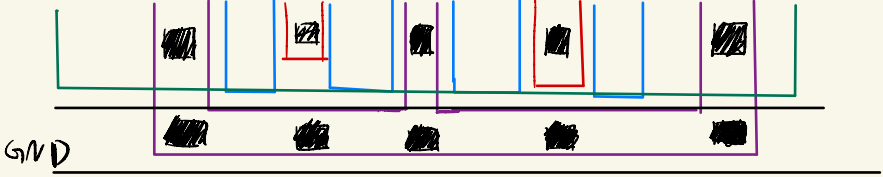

5.5

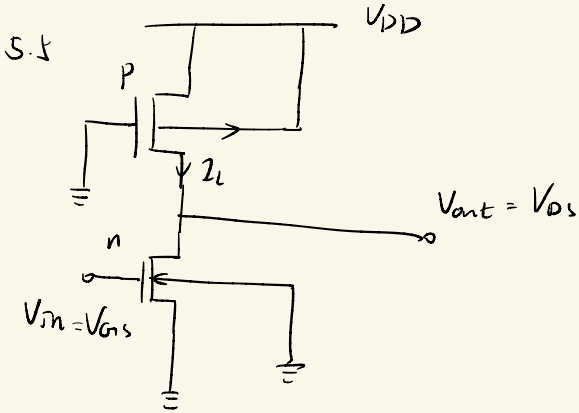

$\mu_n C_{ox} = 102\ \mu A/V^2$

$\mu_p C_{ox} = 51.6\ \mu A/V^2$

$V_{T0,p} = -0.46V$ $\qquad$ $V_{T0,n} = 0.48V$

$|2\phi_F|_n = 1.011V$ $\qquad$ $|2\phi_F|_p = 0.972V$

$E_{c,n} L_n = 0.45V$ $\qquad$ $E_{c,p} L_p = 1.8V$

$V_{DD} = 1.2V$ $\qquad$ $V_{sat,p} = 70000$, $\qquad$ $L_n = L_p = 40nm$

(A) (i) $V_{in} = V_{OH}$ 时, DC功耗为 1mV

$$P_{DC} = 2 \times \frac{V_{DD}}{2} \cdot W_p \cdot V_{sat} \cdot C_{ox} \frac{(V_{DD} - |V_{T0,p}|)^2}{(V_{DD} - |V_{T0,p}|) + E_{c,p} L_p}$$

$$= 1.2 \times \frac{\mu_p C_{ox}}{2} \frac{W_p}{L_p} \cdot \frac{(2 - |V_{T0,p}|)^2}{1 + \frac{V_{DD} - |V_{T0,p}|}{E_{c,p} L_p}}$$

$$10^{-3} = 0.6 \times 51.6 \times 10^{-6} \times \frac{W_p}{L_p} \times \frac{(1.2 - 0.46)^2}{1 + \frac{1.2 - 0.46}{1.8}}$$

$$\left(\frac{W}{L}\right)_p = 83.2$$

(ii) $V_{OL} = 0.1V$

$$P_{DC} = \frac{V_{DD}}{2}\,\mu_n C_{ox}\left(\frac{W}{L}\right)_n \frac{1}{\left(1+\frac{V_{OL}}{E_{c,n}L_n}\right)}\left(2(V_{DD}-V_{T0,n})V_{OL}-V_{OL}^2\right)$$

$$10^{-3} = \frac{1.2}{2}\times 102\times10^{-6}\left(\frac{W}{L}\right)_n \frac{1}{1+\frac{0.1}{0.45}}\left(2\times(1.2-0.48)\times0.1-0.01\right)$$

$$\left(\frac{W}{L}\right)_n = 149$$

(b) 求 V_{2L} 和 V_{2H} 并确定噪声容限

$$V_{2L} = V_{T0,n} + \frac{k_p}{k_n}\cdot\left(V_{out}-|V_{T0,p}|\right)$$

$$W_n\cdot V_{sat,n}C_{ox}\frac{(V_{in}-V_{T0,n})^2}{E_{c,n}L_n} = \frac{k_p}{2}\left(2(V_{DD}-|V_{T0,p}|)(V_{DD}-V_{out})-(V_{DD}-V_{out})^2\right)$$

$V_{2L} = 0.6646$ 或 0.2975 (舍去) V

$V_{out} = 1.113V$

$V_{2H} = V_{T0,n} + 2V_{out}$

$$\frac{k_n}{2}\cdot\frac{1}{\left(1+\frac{V_{out}}{E_{c,n}L_n}\right)}\left(2(V_{in}-V_{T0,n})\cdot V_{out}-V_{out}^2\right) = W_p\cdot V_{sat,p}\cdot C_{ox}\frac{(V_{DD}-|V_{T0,p}|)^2}{(V_{DD}-|V_{T0,p}|)+E_{c,p}L_p}$$

$V_{2H} = 0.02382$ (舍去) 或 $0.9342V$

$NM_H = V_{OH}-V_{IH} = 1.2-0.9342 = 0.2658V$

$NM_L = V_{2L}-V_{OL} = 0.6646-0.1 = 0.5646V$

(c)

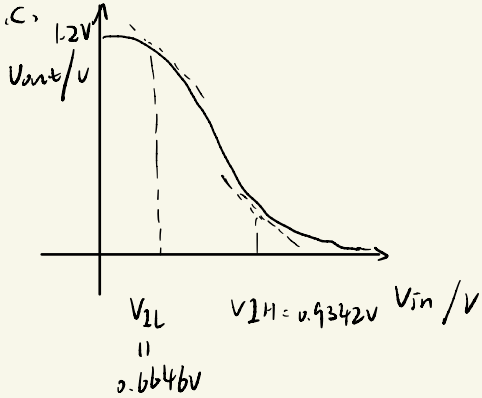

5.6 nMOS : $V_{T0,n} = 0.48V$ $\mu_n C_{ox} = 102\ \mu A/V^2$ $\left(\frac{W}{L}\right)_n = 40$

pMOS : $V_{T0,p} = -0.46V$ $\mu_p C_{ox} = 51.6\ \mu A/V^2$ $\left(\frac{W}{L}\right)_p = 19$

$V_{DD} = 1.2V$

求 NM 和 V_{th}

假设: $V_{OL} = 0V$, $V_{OH} = 1.2V$

$V_{in} = V_{IL}$, 又可以假设 $V_{in} - V_{T0,n} \ll E_{c,n}L_n$, $\frac{V_{DD} - V_{out}}{E_{c,p}L_p} \ll 1$

$$\frac{k_n}{2}(V_{in} - V_{T0,n})^2 = \frac{k_p}{2}\left(2(V_{DD} - V_{in} - |V_{T0,p}|)(V_{DD} - V_{out}) - (V_{DD} - V_{out})^2\right)$$

$V_{in} = V_{IL}$, $\frac{dV_{out}}{dV_{in}} = -1$

$$V_{IL} = \frac{2V_{out} + V_{T0,p} - V_{DD} + K_R V_{T0,n}}{1 + K_R}$$

$$= \frac{2V_{out} - 0.46 - 1.2 + 1.04 \times 0.48}{1 + 1.04} = 0.98V_{out} - 0.569$$

$$\frac{10.2\times10^{-4}}{2}\cdot(0.98V_{out}-0.569-0.48)^2$$

$$\simeq \frac{9.8\times10^{-4}}{2}\left(2\times(1.2-0.98V_{out}+0.569-0.46)(1.2-V_{out})-(1.2-V_{out})^2\right)$$

$$V_{out}=1.168V$$

$$V_{2L}=0.98V_{out}-0.569=0.576V$$

$$V_{2H}=\frac{V_{DD}+V_{T0,p}+k_R(2V_{out}+V_{T0,n})}{1+k_R}$$

$$=\frac{1.2-0.46+1.04(2V_{out}+0.48)}{1+1.04}$$

$$=1.02V_{out}+0.61$$

$$1.04(2(1.02V_{out}+0.61-0.48)\cdot V_{out}-V_{out}^2)=(1.2-1.02V_{out}-0.61-0.46)^2$$

$$4.16V_{out}^2+53.6V_{out}-1.76=0$$

$$V_{out}=0.033V$$

$$V_{2H}=1.02\times0.033+0.61=0.64V$$

$$NM_L=V_{2L}-V_{0L}=0.576V$$

$$NM_H=V_{0H}-V_{2H}=0.56V$$

$$k=\frac{\mu_p C_{ox}\left(\frac{W}{L}\right)_p}{\mu_n C_{ox}\left(\frac{W}{L}\right)_n}=0.96$$

$$V_{th} = \frac{V_{T0,n} + \sqrt{K}\,(V_{DD} - |V_{T0,p}|)}{(1+\sqrt{K})} = 0.61V$$

5.7 (a)

$$V_{DS,sat,n} = \frac{(V_{th} - V_{T0,n})\,E_{c,n} \cdot L_n}{(V_{th} - V_{T0,n}) + E_{c,n} \cdot L_n} = 19mV$$

$$V_{SD,sat,p} = \frac{(V_{DD} - V_{th} - |V_{T0,p}|)\,E_{c,p} \cdot L_p}{(V_{DD} - V_{th} - |V_{T0,p}|) + E_{cp} L_p} = 212mV$$

$$K_R = \frac{k_n}{k_p} = \left(\frac{V_{DD} - |V_{T0,p}| - V_{SD,sat,p} - V_{th}}{V_{th} - V_{T0,n} - V_{DS,sat,n}}\right)\left(\frac{E_{c,p}}{E_{c,n}}\right) = 126$$

$$\frac{k_n}{k_p} = \frac{\mu_n C_{ox} \left(\frac{W}{L}\right)_n}{\mu_p C_{ox} \left(\frac{W}{L}\right)_p} = 126$$

$$\frac{W_n}{W_p} = 64$$

$$V_{th} = \frac{V_{T0,n} + V_{DS,sat,n} + \frac{1}{K_R} \cdot \frac{E_{c,p}}{E_{c,n}} \cdot (V_{DD} - |V_{T0,p}| - V_{SD,sat,p})}{1 + \frac{1}{K_R} \cdot \frac{E_{cp}}{E_{cn}}}$$

短沟道: $$V_{th} = \frac{V_{T0,n} + \sqrt{K}\,(V_{DD} - |V_{T0,p}|)}{1+\sqrt{K}}$$

$$K = \frac{W_p E_{c,n} L_n}{W_n E_{c,p} L_p}$$

$$\frac{W_n}{W_p} = 32$$

长沟道: $$V_{th} = \frac{V_{T0,n} + \sqrt{\frac{1}{K_R}}\,(V_{DD} - |V_{T0,p}|)}{1+\sqrt{\frac{1}{K_R}}}$$

$$\frac{W_n}{W_p} = 72.85$$

(b) $V_{T0,n} = 0.552V$, $V_{T0,p} = -0.552V$, $k_R = 1.04$

$$V_{th} = \frac{V_{T0,n} + \sqrt{\frac{1}{k_R}}\,(V_{DD} + V_{T0,p})}{\left(1 + \sqrt{\frac{1}{k_R}}\right)} = \frac{0.552 + \sqrt{\frac{1}{1.04}} \times (1.2 - 0.552)}{\left(1 + \sqrt{\frac{1}{1.04}}\right)} = 0.6V$$

$V_{T0,n} = 0.408V$, $V_{T0,p} = -0.552V$, $k_R = 1.04$

$$V_{th} = \frac{V_{T0,n} + \sqrt{\frac{1}{k_R}}\,(V_{DD} + V_{T0,p})}{\left(1 + \sqrt{\frac{1}{k_R}}\right)} = 0.527V$$

$V_{T0,n} = 0.552V$, $V_{T0,p} = -0.368V$, $k_R = 1.04$

$$V_{th} = \frac{V_{T0,n} + \sqrt{\frac{1}{k_R}}\,(V_{DD} + V_{T0,p})}{\left(1 + \sqrt{\frac{1}{k_R}}\right)} = 0.691V$$

$V_{T0,n} = 0.408V$, $V_{T0,p} = -0.368V$ $k_R = 1.04$

$$V_{th} = \frac{V_{T0,n} + \sqrt{\frac{1}{k_R}}\,(V_{DD} + V_{T0,p})}{\left(1 + \sqrt{\frac{1}{k_R}}\right)} = 0.618V$$

上限为 0.691V，下限为 0.527V