6.1 $\left(\frac{W}{L}\right)_1 = 100.$ $R_S = 100\Omega.$ $R_D = 2k\Omega.$

$C_{GS} = 20fF$ $C_{GD} = 0.2fF$ $C_{DB} = 20fF.$

$\mu_n C_{ox} = 1.34\times10^{-4} A/V^2.$ $V_{DD} = 3V$ $V_{TH} = 0.7V.$ $\lambda = 0.$

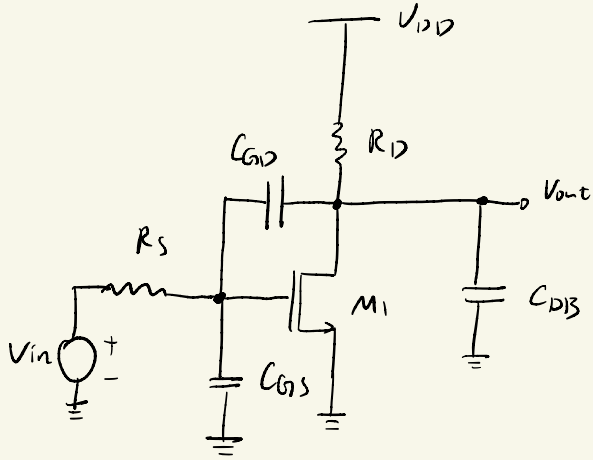

(a) $6.30: \frac{V_{out}}{V_{in}}(s) = \frac{CsC_{GD} - g_{m1}R_D}{R_S R_D \xi s^2 + (R_S(1+g_m R_D)C_{GD} + R_S C_{GS} + R_D(C_{GD}+C_{DB}))s+1}$

$\xi = C_{GD}C_{GS} + C_{GD}C_{DB} + C_{GS}C_{DB}.$

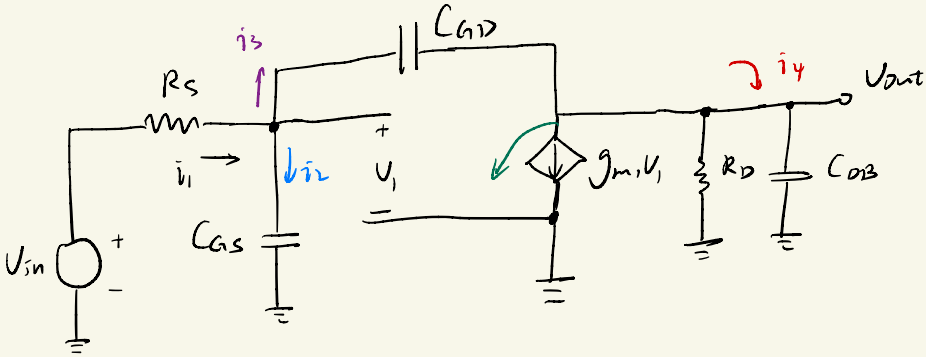

$$\frac{V_{in} - V_1}{R_S} = V_1 \cdot sC_{GS} + (V_1 - V_{out})\, sC_{GD}$$

$$(V_1 - V_{out})\, sC_{GD} = V_{out}\left(\frac{1}{R_D} + sC_{DB}\right) + g_{m1} V_1$$

消去 V_1 就可以解得

$$\frac{V_{out}}{V_{in}}(s) = \frac{sC_{GD} - g_{m1} R_D}{R_S R_D \xi s^2 + (R_S(1+g_m R_D) C_{GD} + R_S C_{GS} + R_D(C_{GD} + C_{DB}))s + 1}$$

$$\xi = C_{GD} C_{GS} + C_{GD} C_{DB} + C_{GS} C_{DB}.$$

$$g_m = \sqrt{2 I_D \mu_n C_{ox} \frac{W}{L}} = 5.177\, mS.$$

零点: $sC_{GD} - g_m = 0$. $s = \frac{g_m}{C_{GD}} = \omega_z$

$$\omega_z = \frac{g_m}{C_{GD}} = 2.588 \times 10^{13}\ rad/s.$$

$$A = 8.16 \times 10^{-23} \qquad B = 4.2627 \times 10^{-11}$$

$$s_1 = \frac{-B + \sqrt{B^2 - 4A}}{2A} = -2.462 \times 10^{10}\ rad/s. = -|\omega_{p1}|$$

$$s_2 = \frac{-B - \sqrt{B^2 - 4A}}{2A} = -4.9777 \times 10^{11}\ rad/s = -|\omega_{p2}|$$

(b)

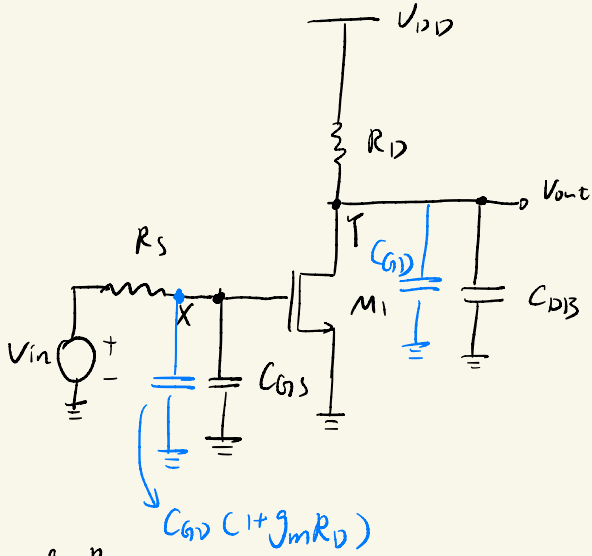

$$A_v = -g_mR_D,$$

$$Z_1 = \frac{\frac{1}{sC_{GD}}}{1-A_v} = \frac{1}{sC_{GD}(1+g_mR_D)}, \quad C_{eq1} = C_{GD}(1+g_mR_D)$$

$$Z_2 = \frac{\frac{1}{sC_{GD}}}{1-A_v^{-1}} = \frac{1}{sC_{GD}\left(1+\frac{1}{g_mR_D}\right)}, \quad C_{eq2} = C_{GD}\left(1+\frac{1}{g_mR_D}\right) \approx C_{GD}$$

X 对地电阻: $R = R_S$ 对地电容: $C = C_{GS} + C_{GD}(1+g_mR_D)$

$$\omega_{p2}' = \frac{1}{R_S\left(C_{GS}+C_{GD}(1+g_mR_D)\right)} = 4.49\times10^{11}\ \text{rad/s}$$

Y 对地电阻: $R = R_D$ 对地电容: $C = C_{GD} + C_{DB}$

$$w_{p1}' = \frac{1}{R_D(C_{GD}+C_{DB})} = 2.475\times10^{10}\ rad/s.$$

w_{p1} 和 w_{p2} 是两个左极点，实际应取负号为极点.

使用 miller 定理的误差：

pole 1：$\left|\frac{2.475-2.462}{2.462}\right| = 0.528\%$

pole 2：$\left|\frac{4.9777-4.49}{4.9777}\right| = 9.798\%$

(c)

$$\frac{V_{in}-V_1}{R_S} = V_1 \cdot sC_{GS} + (V_1-V_{out})\,sC_{GD}$$

$$(V_1-V_{out})\,sC_{GD} = V_{out}\left(\frac{1}{R_D}+sC_{DB}\right) + g_m V_1$$

(a)中方程为：

$$\frac{V_{out}}{V_{in}}(s) = \frac{sC_{GD}-g_m R_D}{R_S R_D \xi s^2 + (R_S(1+g_m R_D)C_{GD} + R_S C_{GS} + R_D(C_{GD}+C_{DB}))s+1}$$

$$\xi = C_{GD}C_{GS} + C_{GD}C_{DB} + C_{GS}C_{DB}.$$

(b)中方程为：

$$\frac{V_{out}}{V_{in}}(s) = \frac{(sC_{GD}-g_m)R_D}{\left(1+\frac{s}{w_{p1}'}\right)\left(1+\frac{s}{w_{p2}'}\right)}$$

$A_v = -g_m R_D = -10.354$.

$20\lg(10.354) = 20.3\ dB$.

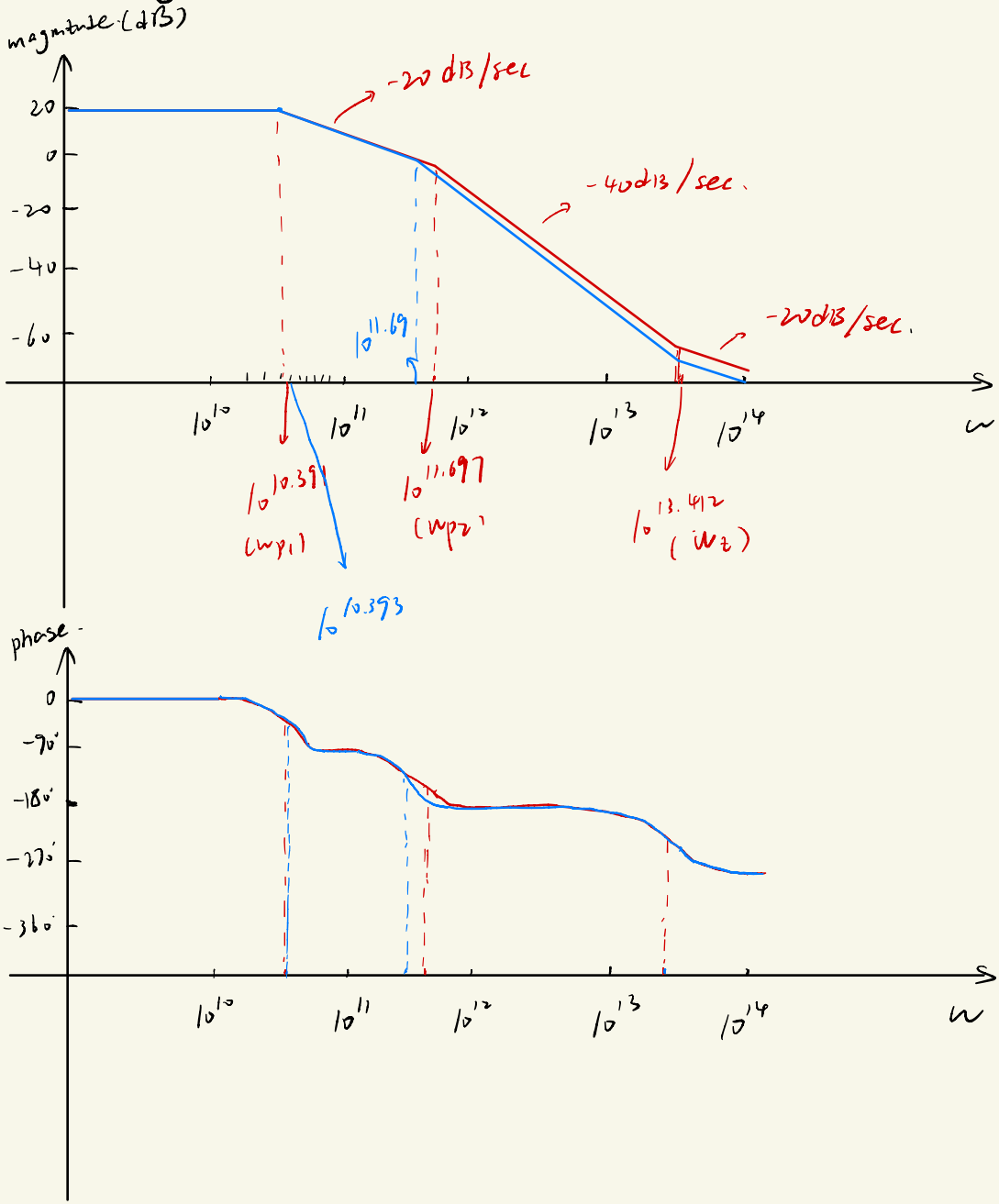

6.2 $\mu_n C_{ox} = 1.34 \times 10^{-4} A/V^2$. $\mu_p C_{ox} = 0.38 \times 10^{-4} A/V^2$

$\left(\frac{W}{L}\right)_1 = 100$. $\left(\frac{W}{L}\right)_2 = 200$ $I_{D(DC)} = 1mA$. M_1 M_2 饱和

$V_{THN} = 0.7V$. $V_{THP} = -0.8V$ $\lambda_n = \lambda_p = \frac{1}{22} V^{-1}$. $V_{DD} = 3V$ $R_S = 100k\Omega$

$C_{2N} = 20fF$ $C_C = 400fF$ $C_L = 600fF$

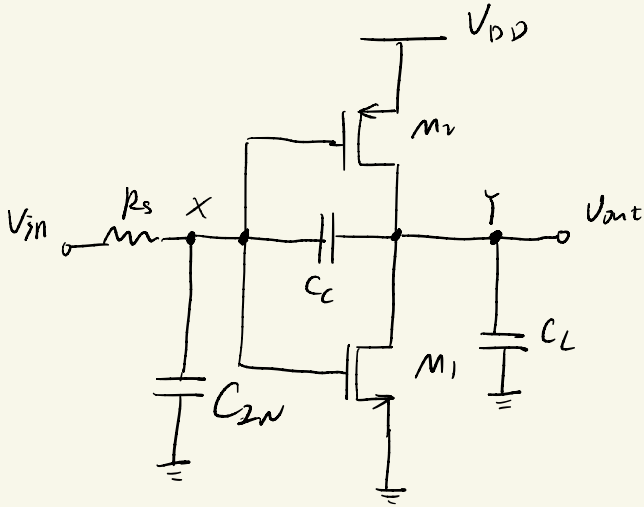

(a) 低频增益:

$$A_v = -(g_{m1}+g_{m2})(r_{o1} \| r_{o2})$$

$$g_{m1} = \sqrt{2I_D \mu_n C_{ox} \left(\frac{W}{L}\right)_1} = 5.177\ mS$$

$$g_{m2} = \sqrt{2I_D \mu_p C_{ox} \left(\frac{W}{L}\right)_2} = 3.899\ mS$$

$$r_{o1} = \frac{1}{\lambda_n I_D} = 22k\Omega$$

$$r_{o2} = \frac{1}{\lambda_p I_D} = 22k\Omega$$

$$A_v = -9.076 \times 11 = 99.836 \approx 100$$

(b)

$$\frac{V_{out}}{V_{in}}(s) = \frac{C_S C_{GD} - g_{m1} R_D}{R_S R_D \xi s^2 + (R_S(1+g_m R_D) C_{GD} + R_S C_{GS} + R_D(C_{GD} + C_{DB}))s + 1}$$

$$\xi = C_{GD} C_{GS} + C_{GD} C_{DB} + C_{GS} C_{DB}.$$

$C_{GS} = C_{2N}$ $\quad C_{DB} = C_L$ $\quad C_{GD} = C_C.$

$R_S = R_S$ $\quad g_m = g_{m1} + g_{m2} = 9.076 \times 10^{-3} S$ $\quad r_o = r_{o1} // r_{o2} = 11k\Omega = R_D$

零点: $S = \frac{g_m}{C_{GD}} = \frac{g_{m1}}{C_C} = 2.269 \times 10^{10}$ rad/s

右零点、

$A = 2.86 \times 10^{-16}$ $\quad B = 4.04644 \times 10^{-6}$

$$S_1 = \frac{-B + \sqrt{B^2 - 4A}}{2A} = -2.47 \times 10^{5} \text{ rad/s} = -|w_{p1}|$$

$$S_2 = \frac{-B - \sqrt{B^2 - 4A}}{2A} = -1.4 \times 10^{10} \text{ rad/s} = -|w_{p2}|$$

(C) X对地电容为: $C_{2N} + C_C(1+g_m R_D)$, 电阻: R_S

$$\omega_{p1} = \frac{1}{R_S\left(C_{2N} + C_C\left(1+g_m R_D\right)\right)} = 2.478\times10^{5}\ \text{rad/s}$$

Y对地电容为: $C_L + C_C$ 电阻 $\frac{1}{g_m}$

$$\omega_{p2} = \frac{g_m}{(C_L + C_C)} = 9.076\times10^{9}\ \text{rad/s}$$

使用 Miller 定理的误差: ω_{p1}: $\left|\frac{2.478-2.47}{2.47}\right| = 0.324\%$

ω_{p2} $\left|\frac{9.076-14}{14}\right| = 35.17\%$

(d)

C中传输方程为:

$$\frac{V_{out}}{V_{in}}(s) = \frac{(sC_C - g_m)(r_{o1}\parallel r_{o2})}{\left(1+\frac{s}{|\omega_{p1}|}\right)\left(1+\frac{s}{|\omega_{p2}|}\right)}$$

$A_v = -g_m R_D = -9.076\times 11 = 99.836 \approx 100$

$20\log_{10}(100) = 40\,dB$

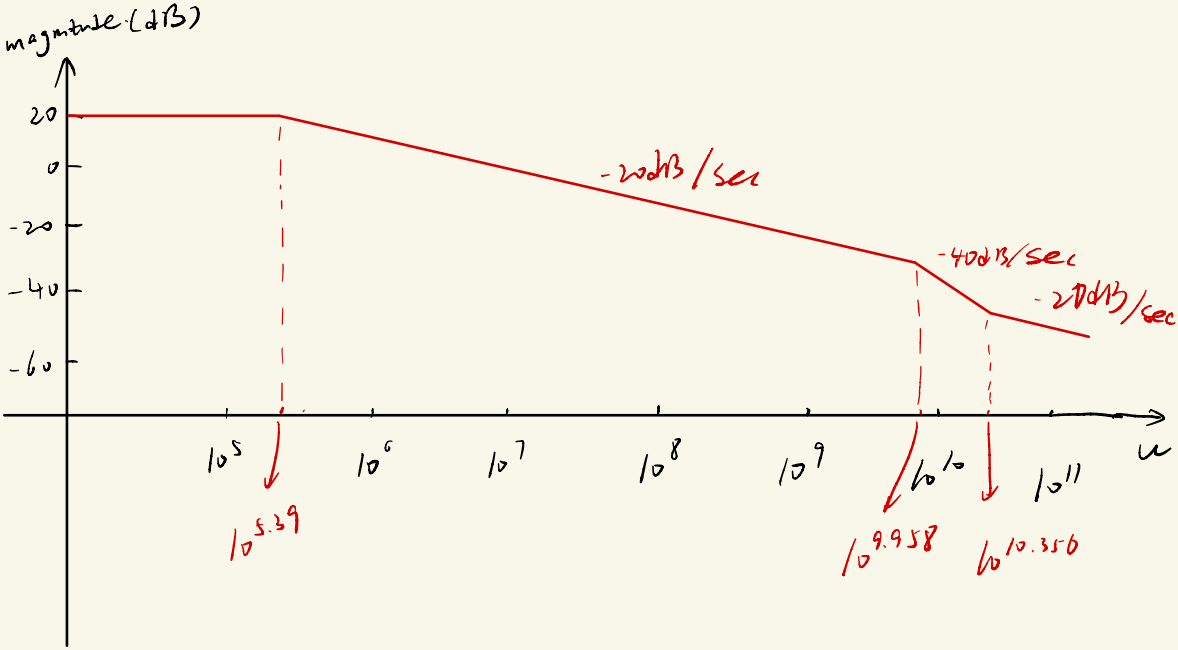

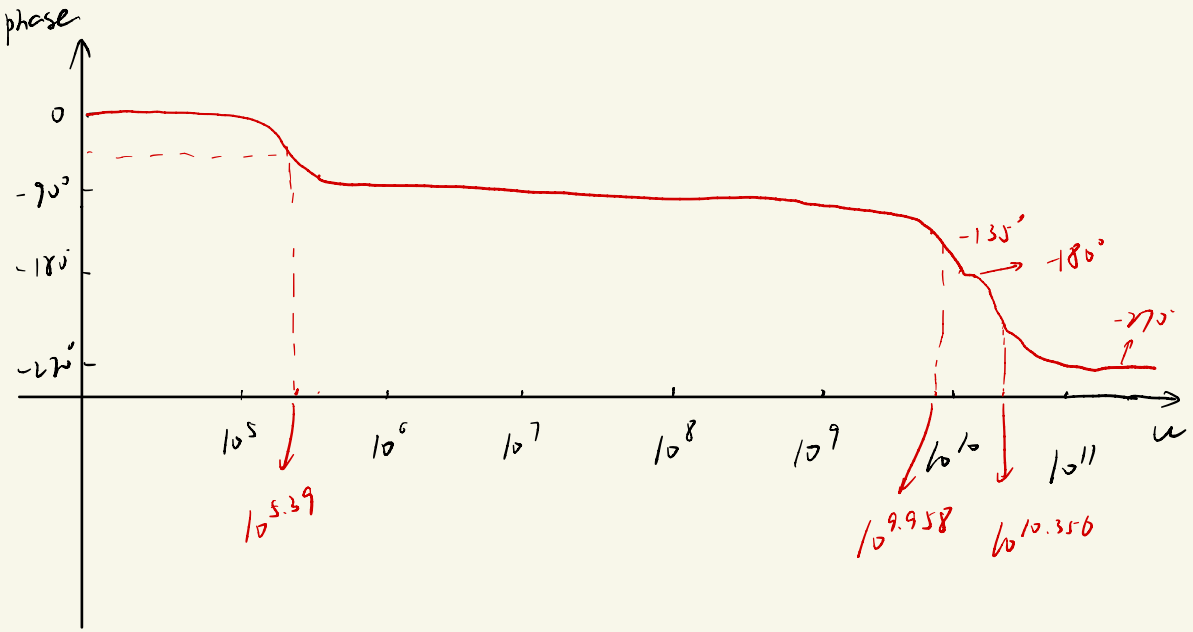

(e) $GBW = |A_v \omega_{p1}| = 2.466 \times 10^7$ rad/s.

$\omega_n = \sqrt{A_v^2 - 1}\ \omega_p \approx 2.466 \times 10^7$ rad/s

6.3 $\lambda = \gamma = 0$.

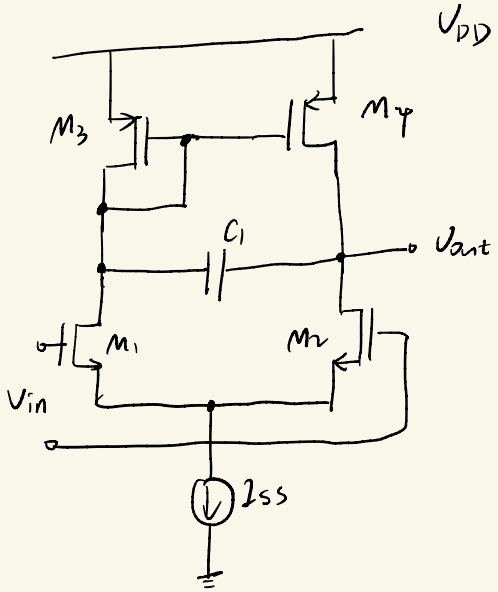

低频等于差动放大器,

$$A_v = -g_{mN}(r_{o1} \| r_{o3}) = \infty$$

高频等于导通, $V_{out} = 0$, $A_v = 0$

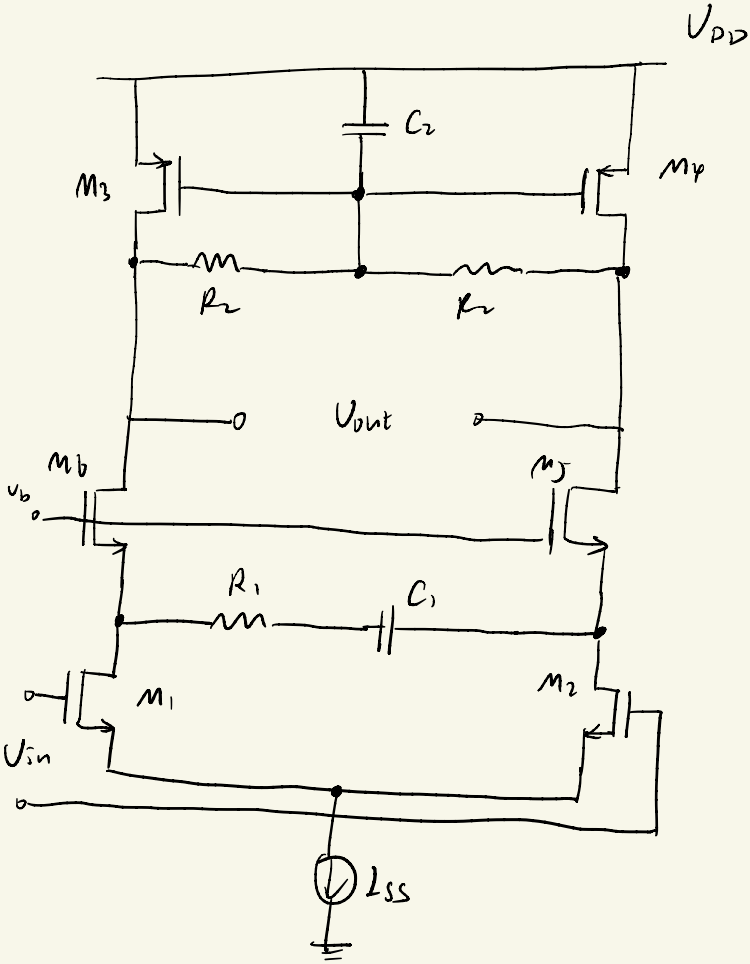
VDD
C2
M3
M4
R2
R2
Vout
M6
M5
Vb
R1
C1
M1
M2
Vin
ISS

优势：对称，利用半边电路！

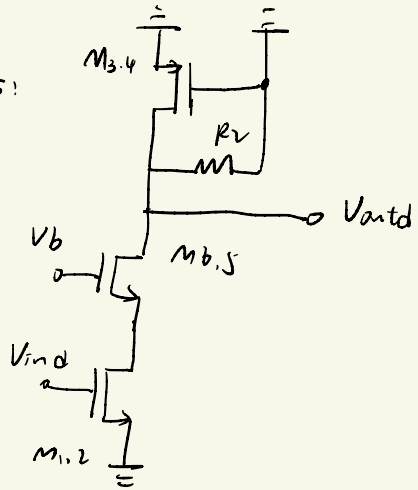
M3,4
R2
Vout d
Vb
M6,5
Vin d
M1,2

$G_m = g_{m1}$ $\qquad R_{out} = g_{m6} r_{o6} r_{o1} \,//\, R_2 \,//\, r_{o3}$

$$A_v = -g_{m1} \cdot \left(g_{m6} r_{o6} r_{o1} \,//\, R_2 \,//\, r_{o3} \right)$$

$$\approx -g_{m1} R_2$$

高频：也可以画边电路：

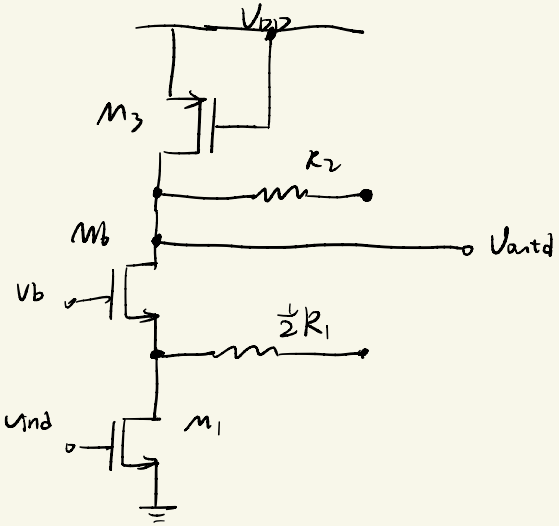

$G_m = g_{m1}$ $\qquad R_{out} = R_2 \,//\, r_{o3} \,//\, \left(g_{m6} r_{o6} \left(\frac{1}{2} R_1 \,//\, r_{o1} \right) \right)$

$$A_v = -g_{m1} \cdot R_2 \,//\, r_{o3} \left(g_{m6} r_{o6} \left(\frac{1}{2} R_1 \,//\, r_{o1} \right) \right)$$

$$\approx -g_{m1} \; R_2 \,//\, \frac{1}{2} g_{m6} r_{o6} R_1$$

6.4 $\lambda = \gamma = 0$

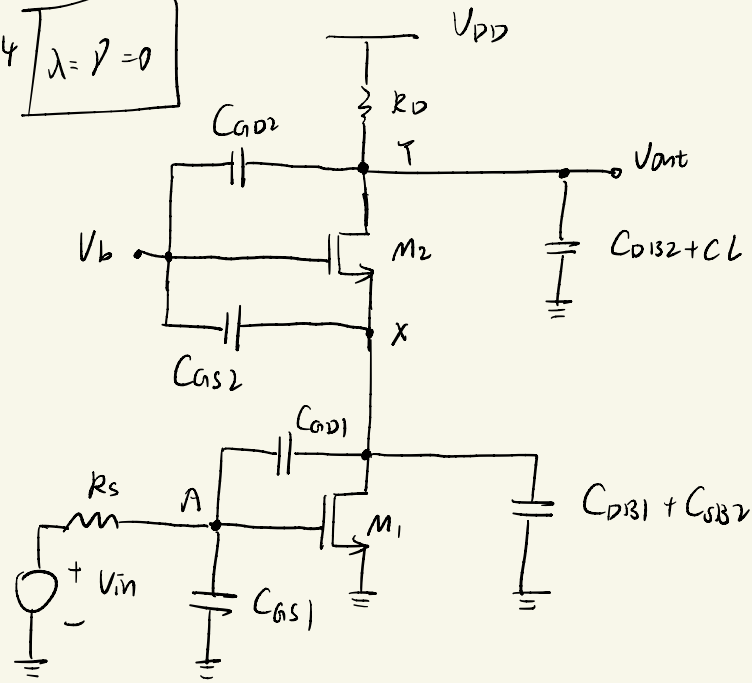

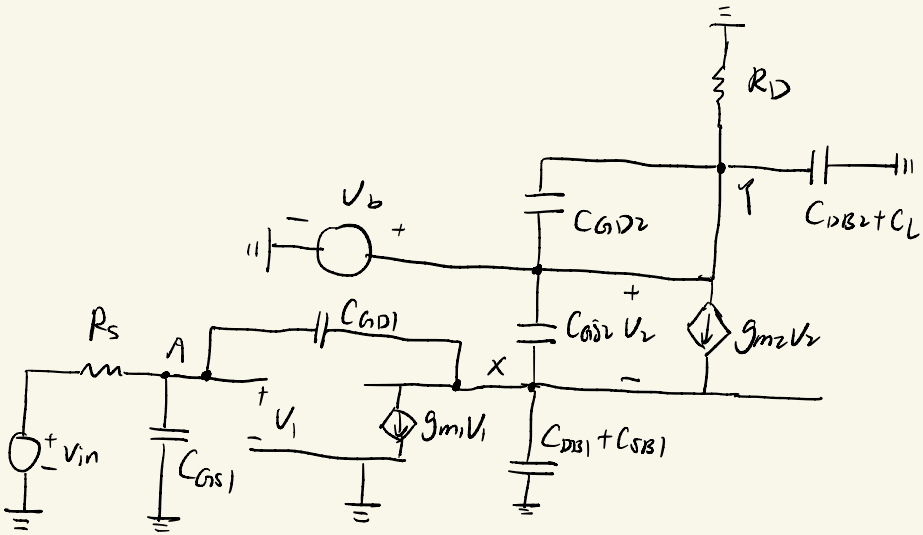

$$A_{A\to X} = -g_{m1}\cdot\frac{1}{g_{m2}} = -4$$

$$A_{X\to Y} = -(-g_{m2})\cdot R_D = g_{m2}R_D$$

$$A = -4g_{m2}R_D$$

$$A_R = R_S \qquad A_C = C_{GS1} + \left(1+\frac{g_{m1}}{g_{m2}}\right)C_{GD1}$$

$$\omega_A = \frac{1}{R_S\left(C_{GS1} + \left(1+\frac{g_{m1}}{g_{m2}}\right)C_{GD1}\right)} = \frac{1}{R_S(C_{GS1}+5C_{GD1})}$$

$$X_R = \frac{1}{g_{m2}} \qquad X_C = C_{DB1} + C_{SB1} + \left(1+\frac{g_{m2}}{g_{m1}}\right)C_{GD1} + C_{GS2}$$

$$\omega_X = \frac{g_{m2}}{C_{DB1} + C_{SB1} + \frac{5}{4}C_{GD1} + C_{GS2}}$$

$$Y_R = R_D \qquad Y_C = C_{DB2} + C_L + C_{GD2}$$

$$\omega_Y = \frac{1}{R_D\left(C_{DB2} + C_L + C_{GD2}\right)}$$

$$\frac{V_{out}}{V_{in}}(s) = \frac{-4g_{m2}R_D}{\left(1+\frac{s}{\omega_A}\right)\left(1+\frac{s}{\omega_X}\right)\left(1+\frac{s}{\omega_Y}\right)}$$

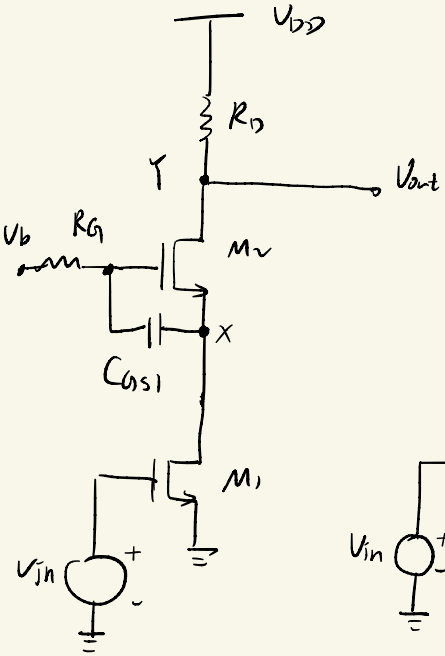

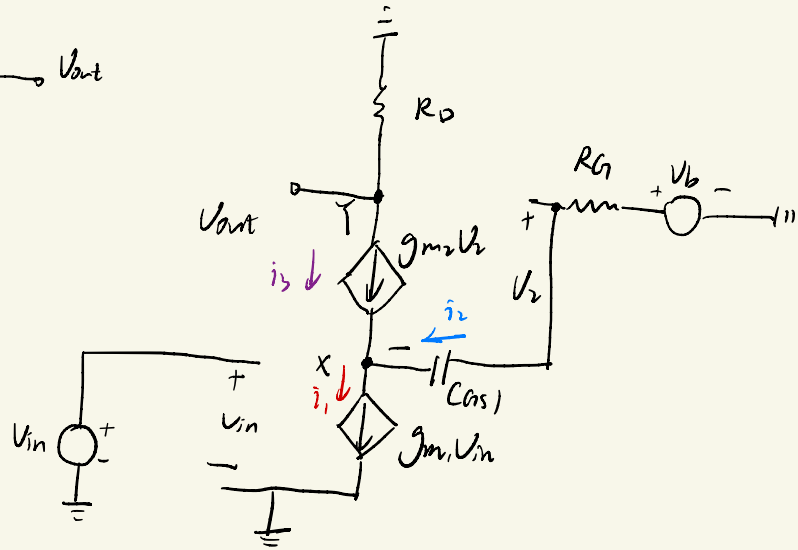

$$g_{m1}V_{in} = V_2 s C_{GS1} + g_{m2}V_2$$

$$V_2 = \frac{g_{m1}V_{in}}{s C_{GS1} + g_{m2}}$$

$$V_{out} = V_y - 0 = -i_3 R_D = -g_{m2}V_2 R_D$$

$$V_{out} = -g_{m2}R_D \cdot \frac{g_{m1}V_{in}}{s C_{GS1} + g_{m2}}$$

$$\frac{V_{out}}{V_{in}} = \frac{-g_{m1}g_{m2}R_D}{s C_{GS1} + g_{m2}}$$

6.5 $\left(\frac{W}{L}\right)_{1,2} = 100$. $\left(\frac{W}{L}\right)_{3,4} = 20$ $\left(\frac{W}{L}\right)_{5,6} = 100$.

$\mu_n C_{ox} = 1.34 \times 10^{-4}\ A/V^2$. $\mu_p C_{ox} = 0.38 \times 10^{-4}\ A/V^2$. $V_{THN} = 0.7V$. $V_{THP} = -0.8V$

$\gamma = 0$ $\lambda = 0.1V^{-1}$ $I_{SS} = 100\mu A$. $K = 2$. $V_{DD} = 3V$.

$C_{GD1} = C_{GD2} = 20fF$ $C_X = C_Y = 366fF$ $CL = 42.28fF$

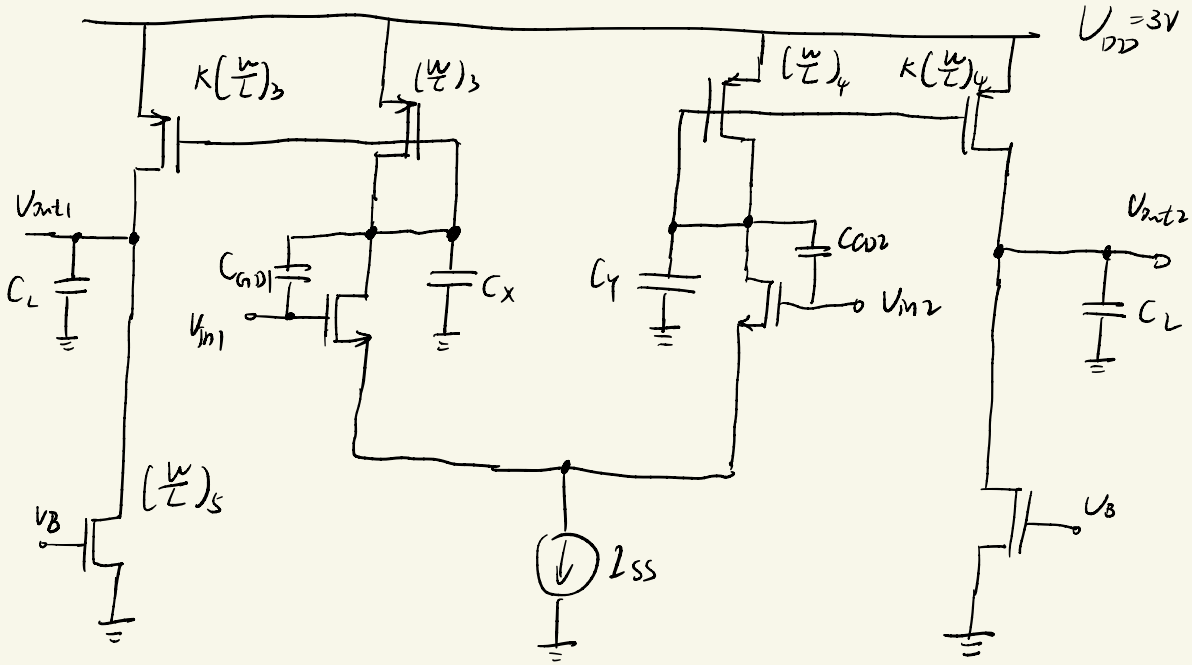

(a) 由于对称性，使用半边电路.

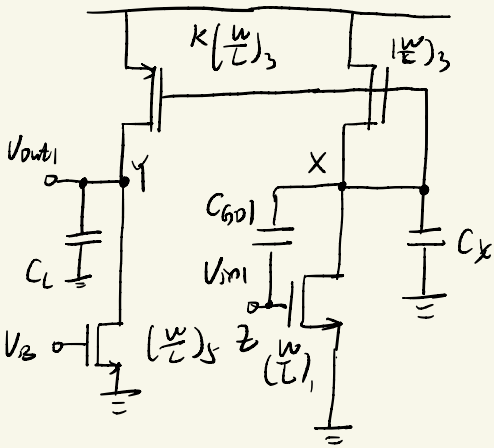

低频条件:

$$A_v = -g_{m1}\, k \cdot (r_{o3} \| r_{o5})$$

$$g_{m1} = \sqrt{2 \cdot \tfrac{1}{2} I_{SS} \cdot \mu_n C_{ox} \left(\frac{W}{L}\right)_1} = 1.1576 \times 10^{-3}\ S.$$

$$r_{o3}' = \frac{1}{\lambda k \frac{1}{2} I_{SS}} = r_{o5} = 10^5\ \Omega$$

$$A_v = -g_{m1} \cdot r_{o3}' = -115.76$$

(b) 右半:

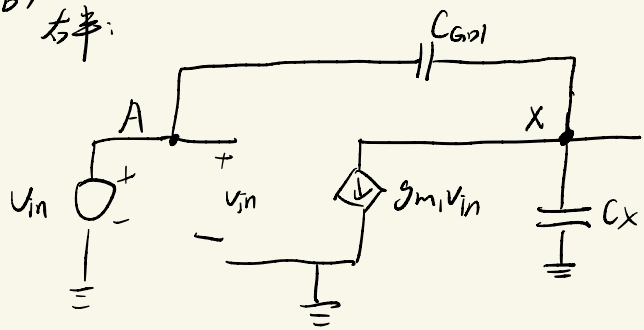

零点分析：X点

$$(V_{in}-V_X)\,sC_{GD1} = g_{m1}V_{in} + V_X\,sC_X$$

$V_X=0$

$$V_{in}\,sC_{GD1} = g_{m1}V_{in}$$

$$s = \frac{g_{m1}}{C_{GD1}}$$

$$g_{m1} = \sqrt{2\cdot\frac{1}{2}I_{SS1}\mu_n C_{ox}\left(\frac{W}{L}\right)_{1,2}} = 1.1576\times10^{-3}\,S$$

$$s = \frac{g_{m1}}{C_{GD1}} = \frac{1.1576\times10^{-3}}{20\times10^{-15}} = 5.788\times10^{10}\ rad/s.$$

$$A_{A\to X} = -g_{m1}\cdot\frac{1}{g_{m3}} = -\sqrt{\frac{\left(\frac{W}{L}\right)_{1,2}}{\left(\frac{W}{L}\right)_{3,4}}\,\frac{\mu_n C_{ox}}{\mu_p C_{ox}}} = -4.199$$

$$X_R = \frac{1}{g_{m3}}. \qquad X_C = C_X + \left(1-A_{A\to X}^{-1}\right)C_{GD1}$$

$$\omega_{p1} = \frac{g_{m3}}{C_X + \left(1-A_{A\to X}^{-1}\right)C_{GD1}}$$

$$g_{m3} = \sqrt{2 \cdot \frac{1}{2} I_{SS} \mu_p C_{ox} \left(\frac{W}{L}\right)_3} = 2.7568 \times 10^{-4}\ S$$

$$\omega_{p1} = \frac{2.7568 \times 10^{-4}}{366 \times 10^{-15} + \left(1 + \frac{1}{4.199}\right) \times 20 \times 10^{-15}} = 7.055 \times 10^{8}\ rad/s.$$

左半:

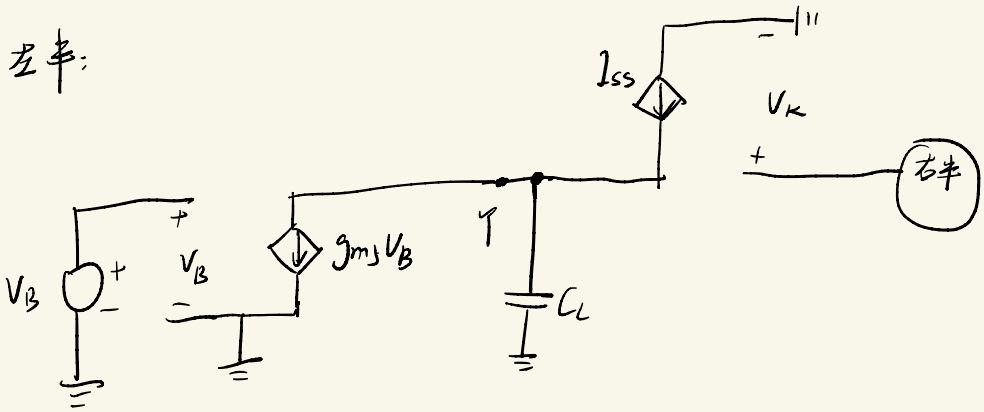

对Y: $Y_R = r_{o3}' \| r_{o5} = \frac{1}{2} \times 10^5\ \Omega$ $\quad Y_C = C_L$

$$\omega_{p2} = \frac{1}{C_L (r_{o3}' \| r_{o5})} = \frac{1}{21.14 \times 10^{-15} \times 10^5}$$

$$= 4.73 \times 10^{8}\ rad/s.$$

6.6.

(a)

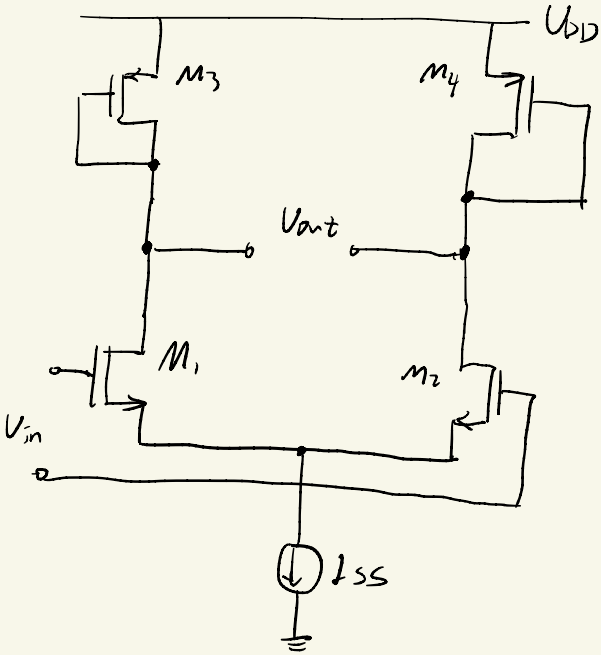
VDD
M3
M4
Vout
M1
M2
Vin
Iss

分析半边电路:

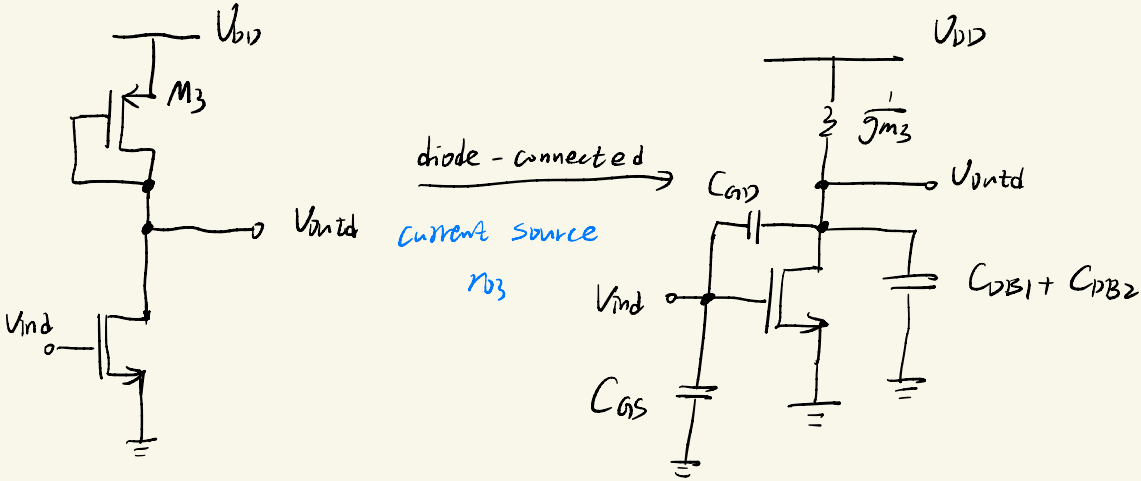
VDD
M3
Vout
Vin
diode - connected
current source
M3
VDD
1/gm3
Vout
CGD
CDB1 + CDB2
Vin
CGS

$$(V_{ind} - V_{outd}) s C_{GD} = V_{out} \cdot g_{m3} + g_{m1} V_{ind} + V_{outd} s C_{DS}$$

令 $V_{outd} = 0$

$$V_{ind} s C_{GD} = g_{m1} V_{ind}$$

$$s = \frac{g_{m1}}{C_{GD}} = \omega_z$$

该电路将在右零点.

分析 τ: $\tau_R = \frac{1}{g_{m3}}$, $\tau_C = C_{DB1} + C_{DB2} + (1 - A_v^{-1}) \cdot C_{GD}$

$$A_v = -\frac{g_{m1}}{g_{m3}}$$

$$\omega_p = \frac{g_{m3}}{C_{DB1} + C_{DB2} + (1 + \frac{g_{m3}}{g_{m1}}) C_{GD}}$$

$$\omega_z \gg \omega_p.$$

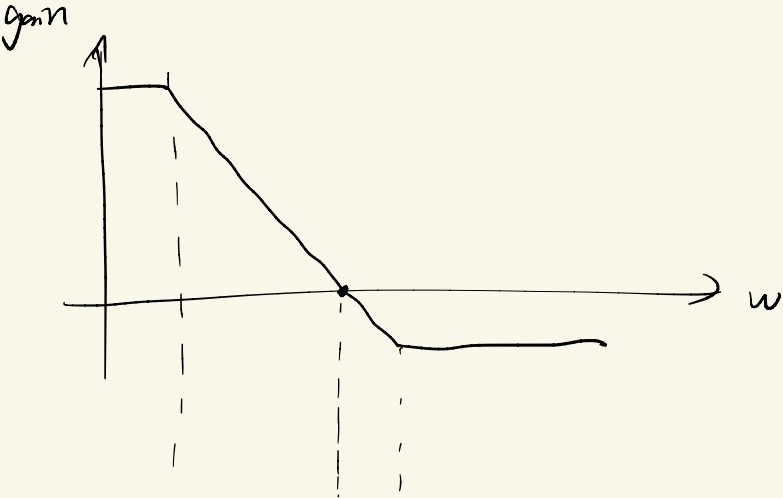

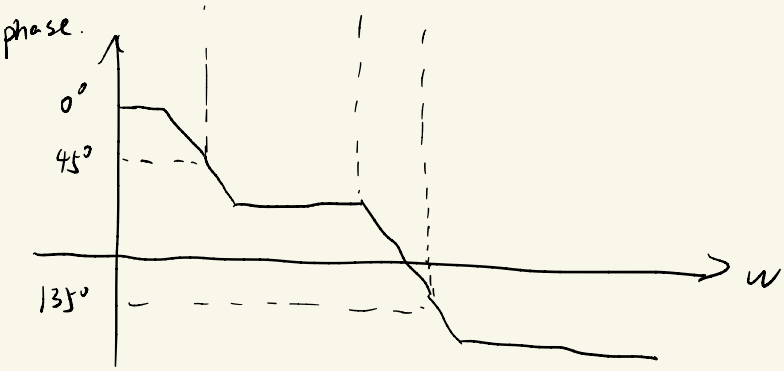

所以不会在单位增益时有相移 135°.

电流源接法分析与此相同

(b)

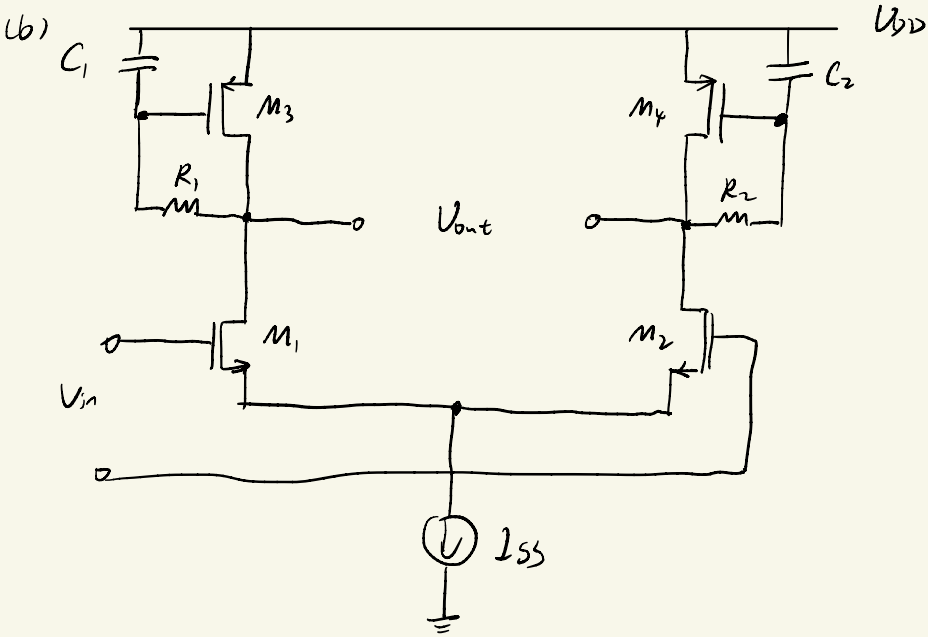

分析其半边电路：

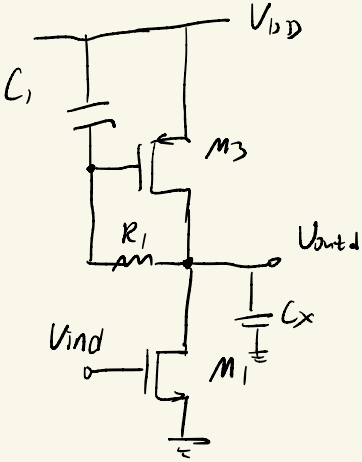

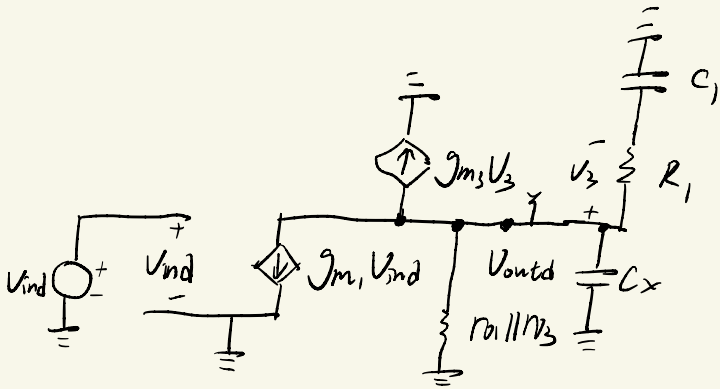

分析结点 1，有：

$$\begin{cases} g_{m1}V_{ind} + g_{m3}V_3 + \dfrac{V_{outd}}{r_{o1}//r_{o3}} + \dfrac{V_3}{R_1} + V_{outd}sC_x = 0 \\ \dfrac{V_3}{R_1} = (V_{outd} - V_3)sC_1 \end{cases}$$

$$V_3\left(\frac{1}{R_1} + sC_1\right) = V_{outd}sC_1$$

$$g_{m1}V_{ind} + g_{m3}\cdot\frac{V_{outd}\,sC_1}{\frac{1}{R_1}+sC_1} + \frac{V_{outd}}{r_{o1}//r_{o3}} + \frac{1}{R_1}\cdot\frac{V_{outd}\,sC_1}{\frac{1}{R_1}+sC_1} + V_{outd}sC_x = 0$$

$$V_{outd}\left(\frac{g_{m3}sC_1}{\frac{1}{R_1}+sC_1}+\frac{1}{r_{o1}\|r_{o3}}+\frac{1}{R_1}\cdot\frac{sC_1}{\frac{1}{R_1}+sC_1}+sC_x\right)=-g_{m1}V_{ind}$$

$$\frac{V_{outd}}{V_{ind}}=\frac{-g_{m1}}{\frac{g_{m3}sC_1R_1}{1+sC_1R_1}\left(1+\frac{1}{R_1}\right)+\frac{1}{r_{o1}\|r_{o3}}+sC_x}$$

$$=\frac{-g_{m1}(1+sC_1R_1)}{g_{m3}sC_1R_1\left(1+\frac{1}{R_1}\right)+\frac{1}{r_{o1}\|r_{o3}}\cdot(1+sC_1R_1)+sC_x(1+sC_1R_1)}$$

$$=\frac{-g_{m1}(1+sC_1R_1)}{s^2C_xC_1R_1+s\left(C_x+(C_1R_1+C_1)g_{m3}+C_1R_1\frac{1}{r_{o1}\|r_{o3}}\right)+\frac{1}{r_{o1}\|r_{o3}}}$$

$$\omega_{p1}+\omega_{p2}=-\frac{C_x+(C_1R_1+C_1)g_{m3}+\frac{C_1R_1}{r_{o1}\|r_{o3}}}{C_xC_1R_1}$$

$$=-\left(\frac{1}{C_1R_1}+\frac{g_{m3}}{C_x}+\frac{g_{m3}}{C_xR_1}+\frac{1}{C_x\cdot r_{o1}\|r_{o2}}\right)$$

$$\omega_z=-\frac{1}{R_1C_1}$$

$2|\omega_z| < |\omega_{p1}| + |\omega_{p2}|$

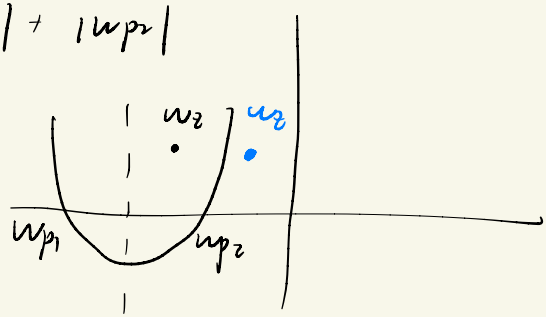

有 $|\omega_{p1}| \geq |\omega_z| \geq |\omega_{p2}|$ 或 $|\omega_{p1}| \geq |\omega_{p2}| \geq |\omega_z|$

ω_z 总是比 ω_p 多 1 个 ω_p 先起作用.

因此不会有 135° 相移.

由于高频时阻抗大，可认为高频条件下有感性.