4.1

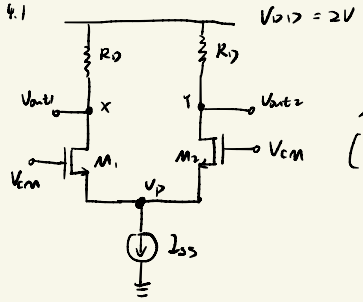

$\mu_n C_{ox} = 0.4\,mA/V^2$

$\left(\frac{W}{L}\right)_{1,2} = 10$

$V_{TH} = 0.4V$

$I_{SS} = 0.16mA$

$R_D = 5k\Omega$

(a) $\frac{1}{2} I_{SS} = \frac{1}{2}\mu_n C_{ox}\left(\frac{W}{L}\right)_{1,2} V_{OD}^2$

$0.16\times10^{-3} = 0.4\times10^{-3}\times10\times V_{OD}^2$

$V_{OD} = \sqrt{0.04} = 0.2V$

$V_{GS} - V_{TH} = V_{OD}$

$V_{GS} = 0.2 + 0.4 = 0.6V$

(b) 假设 M_1、M_2 处于饱和区

$\frac{1}{2} I_{SS} = \frac{1}{2}\mu_n C_{ox}\left(\frac{W}{L}\right)_{1,2}(V_{CM} - V_P - V_{TH})^2$

$0.16\times10^{-3} = 0.4\times10^{-3}\times10\times(1 - V_P - 0.4)^2$

$0.04 = (0.6 - V_P)^2$

$V_P = 0.4V$

此时, $V_{GS} = 1 - 0.4 = 0.6V$, $V_D = V_{DD} - \frac{1}{2}I_{SS}\cdot R_D = 2 - \frac{1}{2}\times 0.16\times10^{-3}\times 5\times10^3 = 1.6V$

显然假设正确 $V_{DS} = 1.6 - 0.4 = 1.2V > V_{OD} = 0.2V$

则 $V_P = 0.4V$, $I_{D1} = I_{D2} = \frac{1}{2}I_{SS} = 0.8mA$ $V_{out1} = V_{out2} = V_D = 1.6V$

(c) 假设 处于饱和区

$0.04 = (1 - V_P)^2$

$V_P = 0.8V$

$V_{GS} = 1.4 - 0.8 = 0.6V$ $V_{OD} = 0.2V$

$V_D = 1.6V = V_{out1} = V_{out2}$, 假设正确 $V_{DS} = 1.6 - 0.8 = 0.8V > V_{OD} = 0.2V$

$I_{D1} = I_{D2} = \frac{1}{2}I_{SS} = 0.8mA$

(d) 假设处于饱和区

$0.04 = (0.5 - V_p)^2$

$V_p = 0.3V$.

$V_{GS} = 0.9 - 0.3 = 0.6V$

$U_D = 1.6V = V_{out1} = V_{out2}$ $\quad V_{DS} = 1.6 - 0.3 = 1.3V > V_{DD} = 0.2V$

假设正确

$I_{D1} = I_{D2} = \frac{1}{2} I_{SS} = 0.8mA$

(e) $V_{GS} - V_{TH} = V_{CM} - V_p - 0.4$

$V_{DS} = 1.6 - V_p$

$\downarrow$ $V_{CM} = 2V$

(f) $V_p \geq 0.2V$

$0.04 = (V_{CM} - 0.2 - 0.4)^2$

$V_{CM} = 0.8V$

(g) $g_m = \sqrt{2 I_D \mu_n C_{ox} \left(\frac{W}{L}\right)_{1,2}}$

$= \sqrt{I_{SS} \mu_n C_{ox} \left(\frac{W}{L}\right)_{1,2}}$

$= \sqrt{0.16 \times 10^{-3} \times 0.4 \times 10^{-3} \times 10}$

$= 10^{-3} \times 0.8 = 8 \times 10^{-4} S$

$A_v = -g_m R_D = -8 \times 10^{-4} \times 5 \times 10^3 = -4$

4.2 $V_{G1} = V_{CM} + V_{id}$ $V_{G2} = V_{CM}$. $V_{CM} = 1V$

$I_{D1} = 0.09mA$ $I_{D2} = 0.07mA$

(a) $I_{D1} = \frac{1}{2}\mu_n C_{ox}\left(\frac{W}{L}\right)_{1,2}(1+V_{id}-V_p-0.4)^2$

$I_{D2} = \frac{1}{2}\mu_n C_{ox}\left(\frac{W}{L}\right)_{1,2}(1-V_p-0.4)^2$

$0.09\times10^{-3} = \frac{1}{2}\times 0.4\times10^{-3}\times10\times(0.6+V_{id}-V_p)^2$

$\frac{0.09}{2} = (0.6+V_{id}-V_p)^2$

$10^{-3}\times0.07 = \frac{1}{2}\times0.4\times10^{-3}\times10\times(0.6-V_p)^2$

$0.6-V_p = \sqrt{\frac{0.07}{2}}$

$V_p = 0.6-\sqrt{\frac{0.07}{2}} = 0.413V$

$0.6+V_{id}-V_p = \sqrt{\frac{0.09}{2}}$

$V_{id} = 0.025V$

$V_{GS1} = V_{CM}+V_{id}-V_p = 1+0.025-0.413 = 0.612V$

$V_{GS2} = V_{CM}-V_p = 1-0.413 = 0.587V$

$V_p = 0.413V$

$V_{id} = 0.025V$

(b) $V_{out1} = V_{DD} - I_{D1}R_D = 2-0.09\times10^{-3}\times5\times10^3 = 1.55V$

$V_{out2} = V_{DD} - I_{D2}R_D = 2-0.07\times10^{-3}\times5\times10^3 = 1.65V$

$V_{od} = V_{out2}-V_{out1} = 0.1V$

(c) 此处的 $\frac{V_{od}}{V_{id}} = \frac{0.1}{0.025} = 4$

因为此处为差动输入

所以所得增益不同

(d)

$$0.6 - V_p = \sqrt{\frac{0.09}{2}}$$

$$V_p = 0.388\,V$$

$$0.6 + V_{id} - V_p = \sqrt{\frac{0.07}{2}}$$

$$V_{id} = -0.0249$$

$$\approx -0.025\,V$$

(e) 根据(d)上计算，取 $V_p = 0.6V$

$$0.16\times10^{-3} = \frac{1}{2}\times 0.4\times10^{-3}\times 10\times(0.6 + V_{sd} - V_p)^2$$

$$V_{sd} = \sqrt{0.08} = 0.283\,V$$

4.3

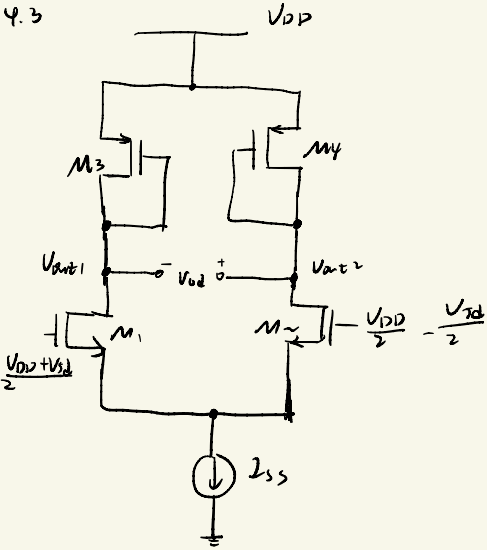

(a)

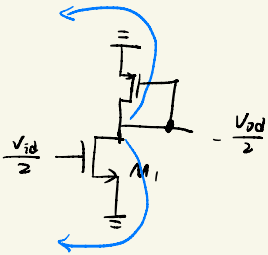

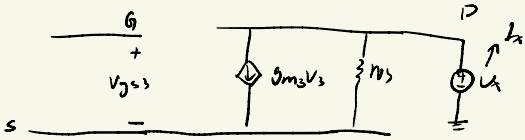

$$A_d = g_{m1} \cdot \frac{r_{o1} \parallel \frac{1}{g_{m3}}}{2}$$

(2) 忽略 r_o，输出电阻由 $\frac{1}{g_{m3}}$ 决定

$$g_{m1} = \sqrt{2 I_D \mu_n \frac{W_1}{L_1}}$$

$$g_{m2} = \sqrt{2 I_D \mu_p \frac{W_3}{L_3}}$$

$$A_d = g_{m1}\left(\frac{1}{2 g_{m3}}\right) = \frac{g_{m1}}{2 g_{m3}}$$

$$= \frac{1}{2}\sqrt{\frac{\mu_n \frac{W_1}{L_1}}{\mu_p \frac{W_3}{L_3}}}$$

(c)

$$A_d = 10 = \frac{1}{2}\sqrt{4\frac{W_1}{W_2}} = \sqrt{\frac{W_1}{W_2}}$$

$$W_1 = 100 W_2$$

(d)

$$V_{in,CM} - V_{TH} \le V_{DS}$$

$$V_{inCM} \le V_{TH_{1,2}} + V_{out} = V_{TH} + V_{D1} = V_{TH_{1,2}} + V_{DD} + V_{DD} + V_{TH_{3,4}}$$

$$= V_{TH_{1,2}} + V_{TH_{3,4}} + V_{DD} + \sqrt{\frac{I_{SS}}{\mu_p C_{ox}\left(\frac{W}{L}\right)_{3,4}}}$$

4.4

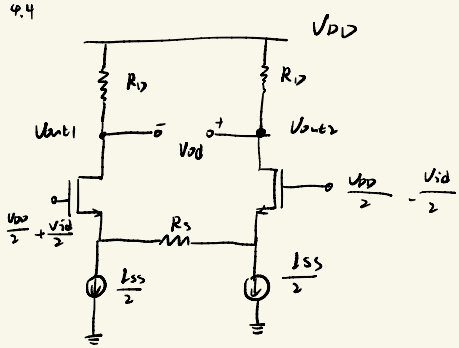

(a)

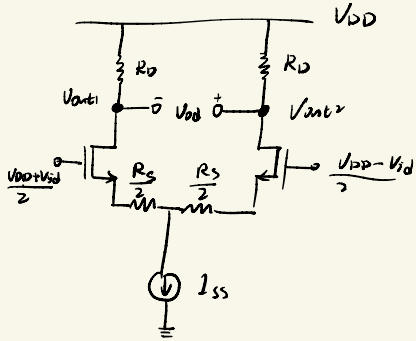

(a) $A_v = \dfrac{g_{m1} R_D}{1+\frac{1}{2} g_{m1} R_S}$

(b) $R_S = 0$

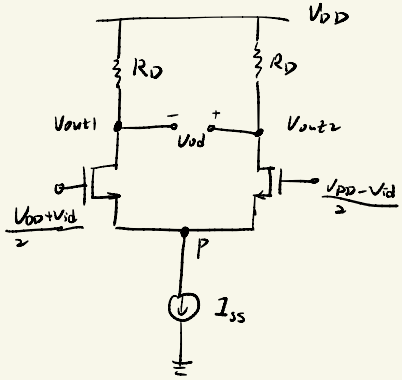

$A_v = g_{m1} R_D$

(c) $A_v = \frac{1}{2} g_{m1} R_D = \dfrac{g_{m1} R_D}{1+\frac{1}{2} g_{m1} R_S}$

$2 = 1 + \frac{1}{2} g_{m1} R_S$

$R_S = \dfrac{2}{g_{m1}}$

(d) 今年考過.

$V_{m2} - V_P = V_{TH}$

$V_{m2} = V_P + V_{TH}$

$I_{SS} = \frac{1}{2}\mu_n C_{ox}\left(\frac{W}{L}\right)_{1,2}\left(V_{m1} - (V_P + I_{SS}\cdot\frac{1}{2}R_S) - V_{TH}\right)^2$

$\sqrt{\dfrac{2I_{SS}}{\mu_n C_{ox}\left(\frac{W}{L}\right)_{1,2}}} = V_{m1} - (V_P + \frac{1}{2} I_{SS} R_S) - V_{TH}$

$$V_{in1} = V_p + \frac{1}{2} I_{SS} R_S + V_{in4} + \sqrt{\frac{2 I_{SS}}{\mu_n C_{ox} \left(\frac{W}{L}\right)_{1,2}}}$$

$$V_{in1} - V_{in2} = V_{id} = \frac{1}{2} I_{SS} R_S + \sqrt{\frac{2 I_{SS}}{\mu_n C_{ox} \left(\frac{W}{L}\right)_{1,2}}}$$

4.5

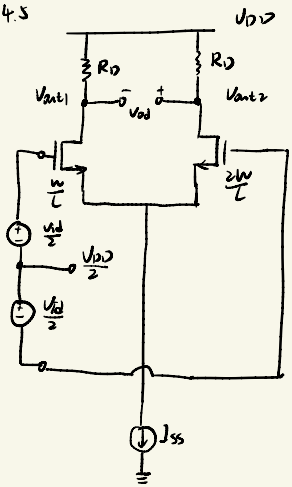

(a)

$$I_1 + I_2 = I_{SS}$$

$$I_2 = 2 I_1$$

$$I_1 = \frac{1}{3} I_{SS}$$

$$I_2 = \frac{2}{3} I_{SS}$$

(b) $V_{out1} = V_{DD} - \frac{1}{3} I_{SS} R_D$

$V_{out2} = V_{DD} - \frac{2}{3} I_{SS} R_D$

$V_{od,\ offset} = V_{out1} - V_{out2} = \frac{1}{3} I_{SS} R_D$

(c) 假设 M_1, M_2 工作于饱和区

$$\frac{1}{3} I_{SS} = \frac{1}{2} \mu_n C_{ox} \frac{W}{L} V_{OD_1}^2$$

$$V_{OD_1} = \sqrt{\frac{\frac{2}{3} I_{SS}}{\mu_n C_{ox} \frac{W}{L}}}$$

$$\frac{2}{3} I_{SS} = \frac{1}{2} \mu_n C_{ox} \frac{2W}{L} V_{OD_2}^2$$

$$V_{OD_2} = \sqrt{\frac{\frac{2}{3} I_{SS}}{\mu_n C_{ox} \frac{W}{L}}}$$

$$V_{OD1} = \frac{V_{DD}}{2} - V_p - V_{TH} \quad , \quad V_{DS1} = V_{DD} - \frac{1}{3} I_{SS} R_D - V_p$$

$$V_{DS1} - V_{OD1} = \frac{1}{2} V_{DD} + V_{TH} - \frac{1}{3} I_{SS} R_D$$

$$V_{OD2} = V_{OD1}, \quad V_{DS2} = V_{DD} - \frac{2}{3} I_{SS} R_D$$

$$V_{DS2} - V_{OD1} = \frac{1}{2} V_{DD} + V_{TH} - \frac{2}{3} I_{SS} R_D$$

$$V_{OD1} = \sqrt{\frac{2 I_{SS}}{3 \mu_n C_{ox} \frac{W}{L}}} \qquad V_{OD2} = \sqrt{\frac{2 I_{SS}}{3 \mu_n C_{ox} \frac{W}{L}}}$$

(d)

$$A_{DM} = \frac{2 R_D}{\frac{1}{g_{m1}} + \frac{1}{g_{m2}}}$$

$$g_{m1} = \frac{2 I_1}{V_{OD1}} = \frac{2 I_{SS}}{3 V_{OD1}}$$

$$g_{m2} = \frac{2 I_2}{V_{OD2}} = \frac{4 I_{SS}}{3 V_{OD2}}$$

4.6

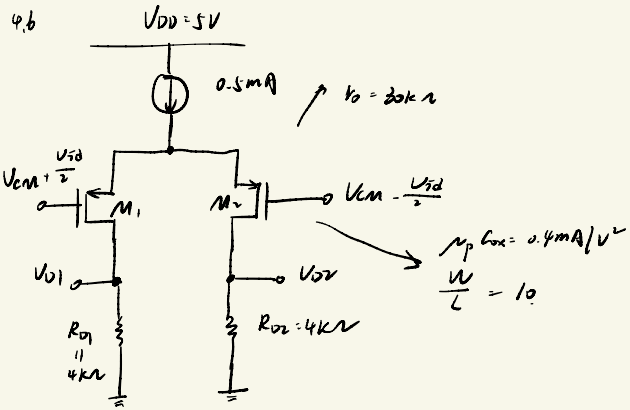

(a)

$$V_{OD} = \sqrt{\frac{2 I_{1,2}}{\mu_p C_{ox} \frac{W}{L}}} = \sqrt{\frac{0.5 \times 10^{-3}}{10 \times 0.4 \times 10^{-3}}} = \frac{1}{2\sqrt{2}} V$$

$$g_m = \frac{I_{SS}}{V_{OD}} = \frac{\frac{1}{2} \times 10^{-3}}{\frac{1}{2\sqrt{2}}} = \sqrt{2} \times 10^{-3} \, S$$

$$A_{DM} = g_m R_D = \sqrt{2} \times 10^{-3} \times 4 \times 10^{3} = 4\sqrt{2}$$

$$A_{CM} = \frac{R_{D1} \parallel R_{D2}}{\frac{1}{2 g_m} + r_{out}} = \frac{2 \times 10^{3}}{\frac{10^{3}}{2\sqrt{2}} + 30 \times 10^{3}} = \frac{2}{\frac{1}{2\sqrt{2}} + 30} \approx \frac{1}{15} = 0.06666\cdots$$

(b) $R_{D1} = 1.01 \times 4k\Omega$

$R_{D2} = 0.99 \times 4k\Omega$

$$A_{cm-DM} = \frac{g_m \Delta R_D}{1+2g_m R_{SS}} = \frac{\sqrt{2}\times10^{-3} \times 0.02\times4\times10^{3}}{1+2\sqrt{2}\times10^{-3}\times30\times10^{3}} = \frac{0.08\sqrt{2}}{1+60\sqrt{2}} \approx \frac{0.08}{60} = \frac{1}{750} = 0.00133\ldots$$

$$CMRR_dB = 20\log_{10}\left(\frac{4\sqrt{2}}{\frac{1}{750}}\right)$$

$$= 20\log_{10}(3000\sqrt{2})$$

$$= 20(\log_{10}3\sqrt{2} + 3)$$

$$= 60 + 20\log_{10}(3\sqrt{2})$$

$$\approx 60 + 12.55$$

$$= 72.55\,dB$$

(c) $$A_{cm-DM} = \frac{\Delta g_m R_D}{1+2g_m R_{SS}} = \frac{1}{750}$$

$$CMRR = 20\log_{10}\left(\frac{4\sqrt{2}}{750}\right) = 72.55\,dB$$

$$A_{cm-DM} = \frac{\Delta g_m R_D}{1+2g_m R_{SS}} + \frac{g_m \Delta R_D}{1+2g_m R_{SS}} = \frac{2}{750}$$

$$CMRR_dB = 67\,dB$$

4.7

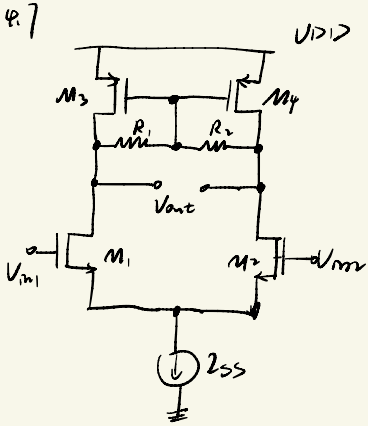

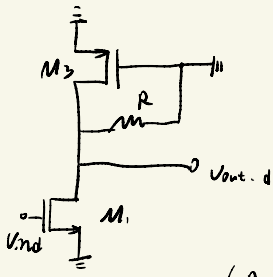

$(R = R_1 = R_2)$

$$\frac{V_{outd}}{V_{ind}} = -g_{m1}(R \| r_{o3} \| r_{o1})$$

8.

(a)

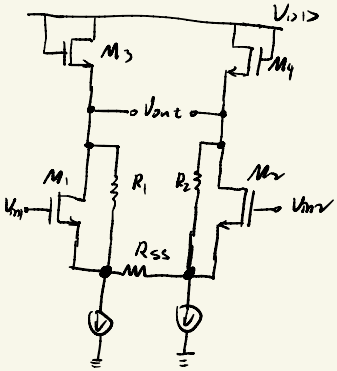

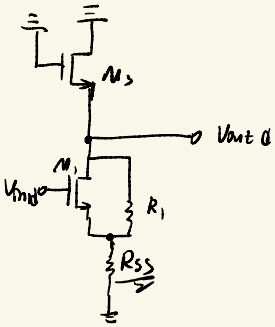

$$\frac{V_{out\,d}}{V_{in\,d}} = \frac{2g_{m1}}{R_{SS}} \frac{1}{g_{m1} + \frac{1}{R_1 \| \frac{1}{2}R_{SS}}} \left(r_{o3} \| \frac{1}{g_{m3}} \right) \| \left(g_{m1}(R_1 \| r_{o1}) \frac{R_{SS}}{2} + \frac{R_{SS}}{2} + R_1 \| r_{o1} \right)$$

(b)

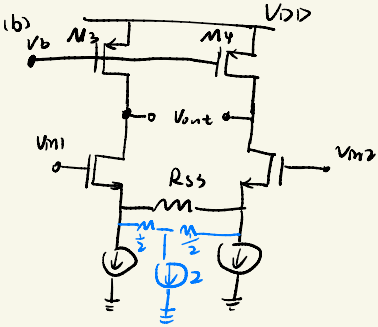

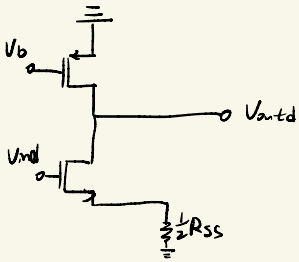

$$\frac{V_{out\,d}}{V_{in\,d}} = \frac{2g_{m1}}{R_{SS}} \frac{1}{g_{m1} + \frac{R_{SS}}{2} \| r_{o1}} \left(r_{o3} \| \left(g_{m1} r_{o1} \frac{R_{SS}}{2} + r_{o1} + \frac{R_{SS}}{2} \right) \right)$$

(c)

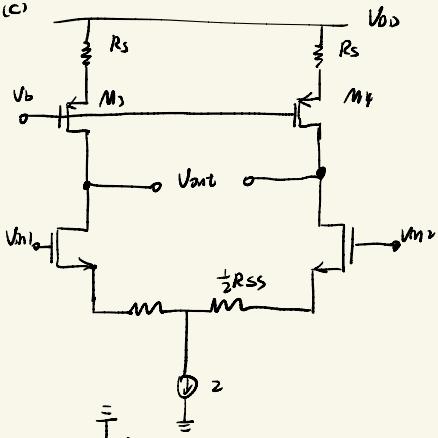

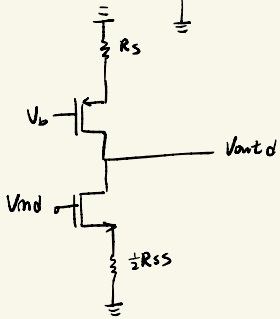

$$\frac{V_{out\,d}}{V_{in\,d}} = \frac{2g_{m1}}{R_{SS}} \frac{1}{g_{m1} + \frac{R_{SS}}{2} \| r_{o1}} \left((g_{m3} r_{o3} R_S + r_{o3} + R_S) \| \left(g_{m1} r_{o1} \frac{R_{SS}}{2} + r_1 + \frac{R_{SS}}{2} \right) \right)$$

9. (a)

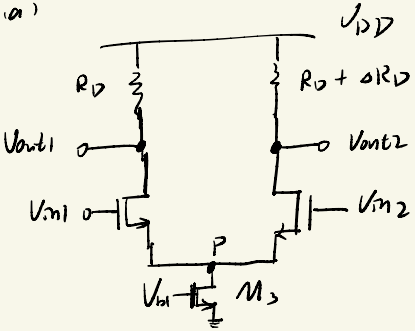

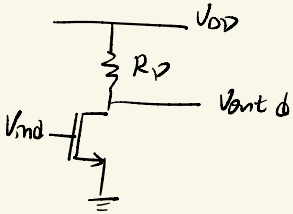

$$A_{DM} = \frac{V_{outd}}{V_{ind}} = -g_{m1} R_D$$

$$A_{CM} - A_{DM} = \frac{\Delta V_{out}}{\Delta V_{CM}} = \frac{\Delta R_D \, \Delta I_D}{\Delta I_D \left(\frac{1}{g_{m1}} + 2r_{o3} \right)} = \frac{\Delta R_D}{\frac{1}{g_{m1}} + 2r_{o3}}$$

$$CMRR = \frac{A_{DM}}{A_{CM} - A_{DM}} = \frac{(1 + 2r_{o3} g_{m1}) R_D}{\Delta R_D}$$

(2)

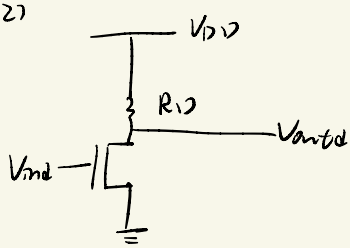

$$A_{DM} = -g_{m1} R_D$$

$$A_{CM-DM} = -\frac{\Delta R_D}{\frac{1}{g_{m1}} + 2(g_{m3} r_{o3} r_{o4} + r_{o3} + r_{o4})}$$

$$CMRR = \frac{(1 + 2(g_{m3} r_{o3} r_{o4} + r_{o3} + r_{o4})) R_D}{\Delta R_D}$$