7.1

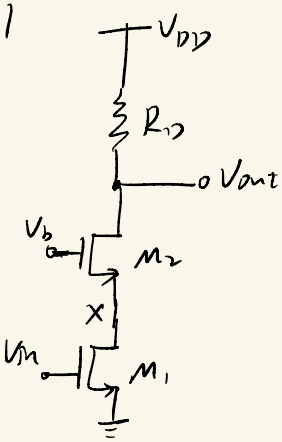

$\frac{W}{L} = \frac{50}{0.5} = 100$. $R_D = 2k\Omega$

$I_D = 1mA$ $V_{DD} = 3V$. all saturation

$\mu_n C_{ox} = 1.34 \times 10^{-4} A/V^2$. $V_{TH} = 0.7V$ (0.20)

noise coefficient $\gamma = \frac{2}{3}$.

100MHz.

$$\overline{I_{n,out}^2} = \frac{4kT}{R_D} + 4kT\gamma g_{m1}$$

$$\overline{V_{n,in}^2} = \frac{4kT}{R_D g_{m1}^2} + \frac{4kT\gamma}{g_{m1}}$$

$$g_{m1} = \sqrt{2\mu_n C_{ox} I_D \frac{W}{L}} = \sqrt{2 \times 1.34 \times 10^{-4} \times 10^{-3} \times 100} = 5.17687 \times 10^{-3} S$$

$$\overline{V_{n,in}^2} = 4kT\left(\frac{1}{R_D g_{m1}^2} + \frac{\gamma}{g_{m1}}\right)$$

$$= 4 \times 1.38 \times 10^{-23} \times 300 \times \left(\frac{1}{2 \times 10^3 \times (5.17687 \times 10^{-3})^2} + \frac{\frac{2}{3}}{5.1768 \times 10^{-3}}\right)$$

$$= 2.44154 7 \times 10^{-18} V^2/Hz$$

$$V_{in,noise} = \sqrt{\int_0^{100M} \overline{V_{n,in}^2}\, df} = \sqrt{2.44154 7 \times 10^{-18} \times 10^8}$$

$= 1.562344 \times 10^{-5}\ V$

7.2 CS stage.

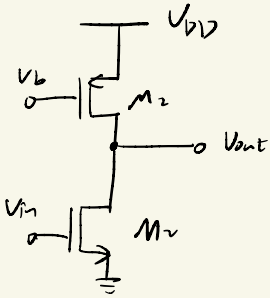

$\left(\frac{W}{L}\right)_1 = 100 \quad I_{D_1} = I_{D_2} = 0.1mA \quad V_{DD} = 3V$

$\mu_n C_{ox} = 1.34 \times 10^{-4} A/V^2 \quad \mu_p C_{ox} = 0.38 \times 10^{-4} A/V^2$

$V_{THN} = 0.7V \quad V_{THP} = -0.8V$ noise coefficient $\gamma = \frac{2}{3}$

$\overline{V_{n,in,2}^2} = \frac{1}{9} \overline{V_{n,in,1}^2}$

$\overline{V_{n,in,1}^2} = 4kT\gamma g_{m1}(r_{o1} \| r_{o1}) \quad \overline{V_{n,in,2}^2} = 4kT\gamma g_{m2}(r_{o1} \| r_{o2})$

$g_{m2} = \frac{1}{9} g_{m1}$

$g_{m1} = \sqrt{2\mu_n C_{ox}\left(\frac{W}{L}\right)_1 I_D} = \sqrt{2 \times 1.34 \times 10^{-4} \times 100 \times 0.1 \times 10^{-3}}$

$= 1.637 \times 10^{-3} S$

$V_{out} - 0 \geq V_{in} - 0 - V_{THN}$

$V_{out\,min} \geq V_{DD1} = \frac{2I_D}{g_{m1}} = \frac{2 \times 0.1 \times 10^{-3}}{1.637 \times 10^{-3}} = 0.122\ V$

$$V_{out} - V_{DD2} \le V_{G2} - V_{TMP} - V_{DD2}$$

$$V_{out} \le V_{DD} + V_{DD2} = 3 - \frac{2I_D}{g_{m2}} = 3 - \frac{18I_D}{g_{m1}} = 3 - 9 \cdot V_{out,min}$$

$$\text{swing} = 3 - 10\, V_{out,min} = 3 - 1.22V = 1.78V$$

7.3 (a)

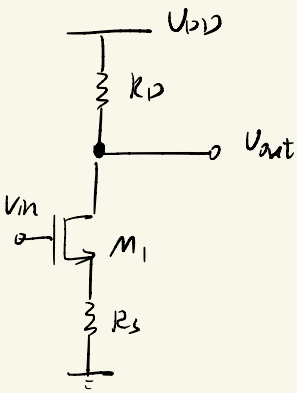

Input referred thermal noise power density. $\eta = \gamma = 0$

$$\overline{V_{n,in}^2} = \frac{\overline{V_{n,out}^2}}{A_v^2}$$

$$A_v = -G_m R_{out}$$

$$= -\left(\frac{1}{\frac{1}{g_{m1}} + R_s}\right) \cdot R_D$$

$$= -\frac{g_{m1} R_D}{1 + R_s g_{m1}}$$

$$\overline{V_{n,out}^2} = 4kTR_D + \frac{4kT\gamma}{g_{m1}} A_v^2 + 4kTR_s A_v^2$$

$$A_v^2 = \frac{g_{m1}^2 R_D^2}{(1 + R_s g_{m1})^2}$$

$$\overline{V_{n,in}^2} = \frac{\overline{V_{n,out}^2}}{A_v^2} = \frac{4kT(1 + R_s g_{m1})^2}{g_{m1}^2 R_D} + \frac{4kT\gamma}{g_{m1}} + 4kTR_s$$

(b)

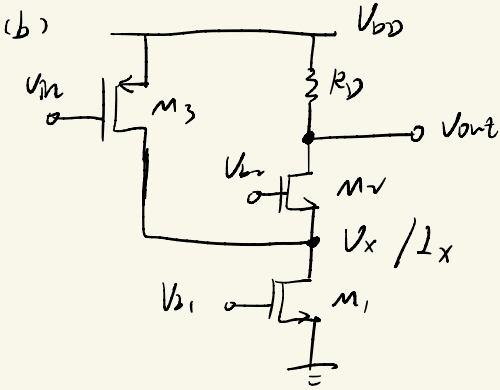

V_x ↑. V_{out} ↑

$$A_{V_{in}\to I_x} = -g_{m3}$$

$$A_{I_x\to V_{out}} = \frac{I_x \cdot R_D}{I_x} = R_D$$

$$A_{V_{in}\to V_{out}} = -g_{m3} R_D$$

$$\overline{V_{n,out}^2} = 4kTR_D + 4kT\gamma g_{m1} \cdot A^2_{I_x\to V_{out}}$$

$$\overline{I_x^2} = \frac{4kTR_D}{A^2_{I_x\to V_{out}}} + 4kT\gamma g_{m1}$$

$$\overline{V_{n,in}^2} = \frac{\overline{I_x^2}}{A^2_{V_{in}-I_x}} + \frac{4kT\gamma}{g_{m3}}$$

$$= \frac{4kT\gamma}{g_{m3}} + \frac{4kTR_D}{A^2_{V_{in}\to V_{out}}} + \frac{4kT\gamma g_{m1}}{A^2_{V_{in}\to I_x}}$$

$$= \frac{4kT\gamma}{g_{m_3}} + \frac{4kT}{g_{m_3}^2 R_D} + \frac{4kT\gamma g_{m_1}}{g_{m_3}^2}$$

7.4 → input-referred thermal and $\frac{1}{f}$ noise power density

b:

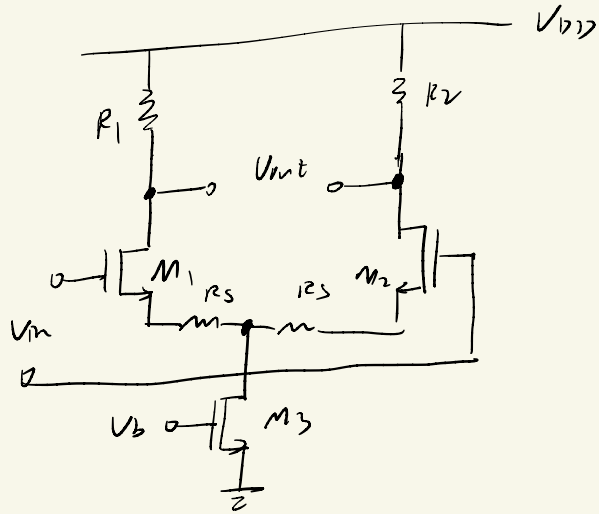

Thermal noise: $\overline{V_{n,out}^2} = 2\left(4kTR_1 + \frac{4kT\gamma}{g_{m_1}} A_v^2 + 4kTR_S A_v^2\right)$

$$A_v = -G_m R_{out} = -\left(\frac{1}{\frac{1}{g_{m_1}} + R_S}\right) \cdot R_1$$

$$A_v^2 = \frac{g_{m_1}^2 R_1^2}{(1 + R_S g_{m_1})^2}$$

$$\overline{V_{n,in}^2} = \frac{\overline{V_{n,out}^2}}{A_v^2} = 2\left(\frac{4kTR_1}{A_v^2} + \frac{4kT\gamma}{g_{m_1}} + 4kTR_S\right)$$

$$= 2\left(4kTR_s + \frac{4kT\gamma}{g_{m1}} + 4kTR_1 \cdot \frac{(1+R_s g_{m1})^2}{g_{m1}^2 R_1^2}\right)$$

$$= 2\left(4kTR_s + \frac{4kT\gamma}{g_{m1}} + \frac{4kT(1+R_s g_{m1})^2}{g_{m1}^2 R_1}\right)$$

flicker noise: $\overline{V_{n,in}^2} = \dfrac{2k}{C_{ox} W L f}$

to:

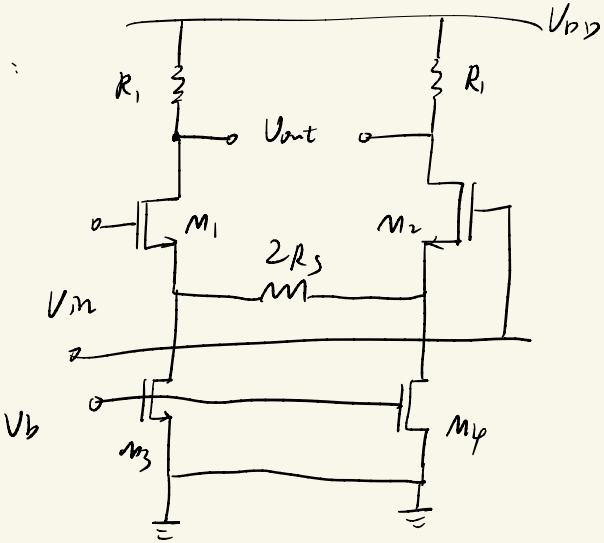

$\Updownarrow$

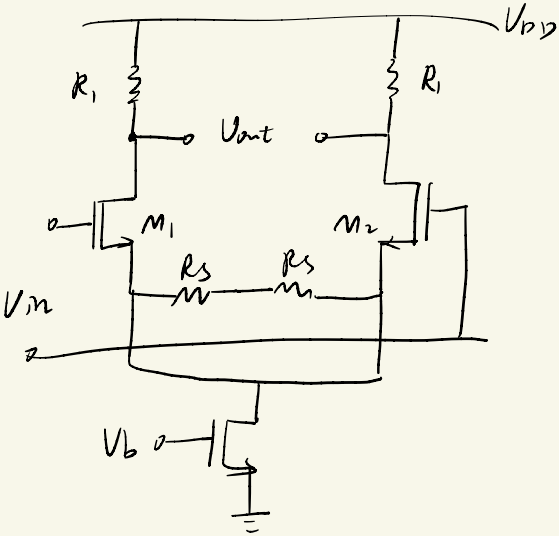

$\Downarrow$ half circuit

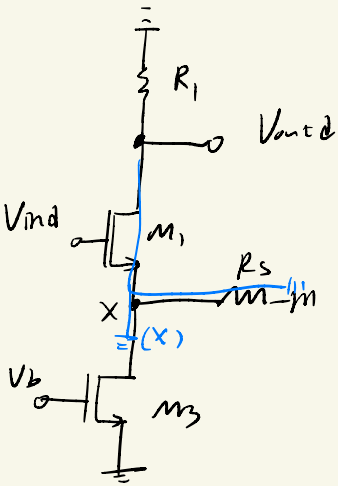

Thermal noise: $A_v = -G_m R_{out} = -\dfrac{R_1}{\frac{1}{g_{m1}} + R_S \| r_{o3}} = -\dfrac{g_{m1} R_1}{1 + g_{m1} \cdot R_S \| r_{o3}}$

$$A_v \approx -\frac{g_{m1}R_1}{1+g_{m1}R_s} \qquad A_v^2 = \frac{g_{m1}^2 R_1^2}{(1+g_{m1}R_s)^2}$$

$$\overline{V_{n,out}^2} = 4kTR_1 + \left(\frac{4kT}{R_s} + 4kT\gamma g_{m3}\right)R_s^2 \quad A_v^2$$

$$\overline{V_{n,in}^2} = \frac{\overline{V_{n,out}^2}}{A_v^2} + \frac{4kT\gamma}{g_{m1}}$$

$$= \frac{4kT\gamma}{g_{m1}} + 4kTR_1\frac{(1+g_{m1}R_s)^2}{g_{m1}^2R_1^2} + 4kTR_s + 4kT\gamma g_{m3}R_s^2$$

$$= \frac{4kT\gamma}{g_{m1}} + \frac{4kT(1+g_{m1}R_s)^2}{g_{m1}^2R_1} + 4kTR_s + 4kT\gamma g_{m3}R_s^2$$

实际热噪声为: $2\overline{V_{n,in}^2} = 2\left(\frac{4kT\gamma}{g_{m1}} + \frac{4kT(1+g_{m1}R_s)^2}{g_{m1}^2R_1} + 4kTR_s + 4kT\gamma g_{m3}R_s^2\right)$

flicker noise: $\frac{2K}{C_{ox}W_1L_1f} + \frac{2K}{C_{ox}W_3L_3f}\left(A_{v_b\to v_x}\right)^2$

$$= \frac{2K}{C_{ox}W_1L_1f} + \frac{2K}{C_{ox}W_3L_3f}\cdot g_{m3}^2R_s^2$$

7.5 $\lambda = \gamma = 0$

→ input-referred thermal noise power density.

$(g_{m3,4} = \frac{1}{2} g_{m5,6})$

(a)

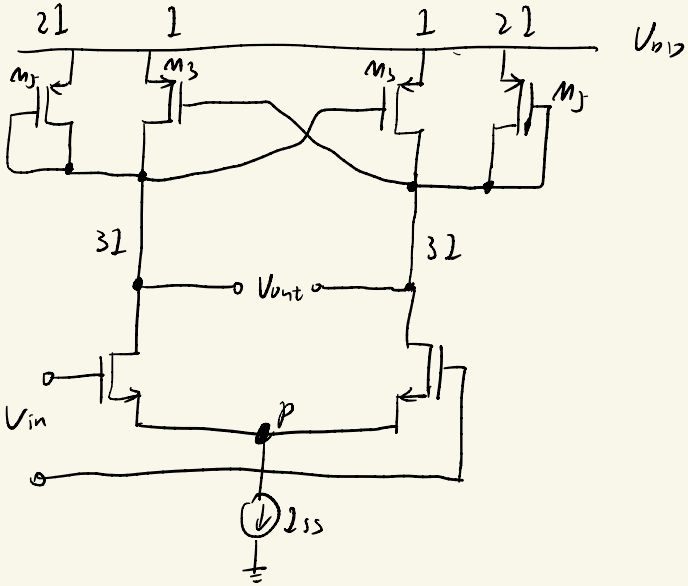

⇓ half circuit

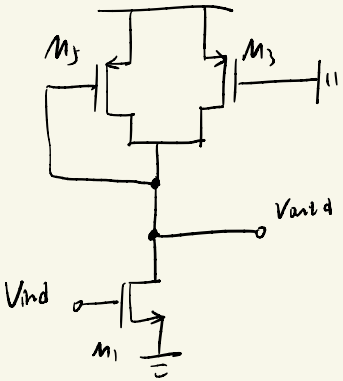

$$A_v = -g_{m1}\,(r_{o5} \| r_{o3})$$

$$\overline{V_{n,out}^2} = \frac{4kT\gamma}{g_{m1}} \cdot A_v^2 + (4kT\gamma g_{m3} + 4kT\gamma g_{m5})(r_{o5} \| r_{o3})^2$$

$$\overline{V_{n,in}^2} = \frac{\overline{V_{n,out}^2}}{A_v^2}$$

$$= \frac{4kT\gamma}{g_{m1}} + 4kT\gamma \cdot \frac{g_{m3} + g_{m5}}{g_{m1}^2}$$

$$= \frac{4kT\gamma}{g_{m1}} + 4kT\gamma \cdot \frac{1.5\, g_{m5}}{g_{m1}^2}$$

实际热噪声为: $2\overline{V_{n,in}^2} = 4kT\gamma\left(\frac{2}{g_{m1}} + \frac{3g_{m5}}{g_{m1}^2}\right)$

$$= 4kT\gamma \cdot \frac{2g_{m1} + 3g_{m5}}{g_{m1}^2}$$

(b)

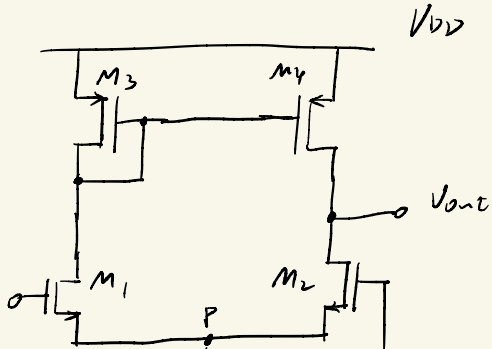

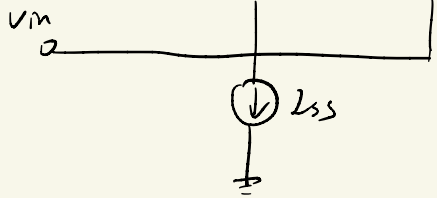

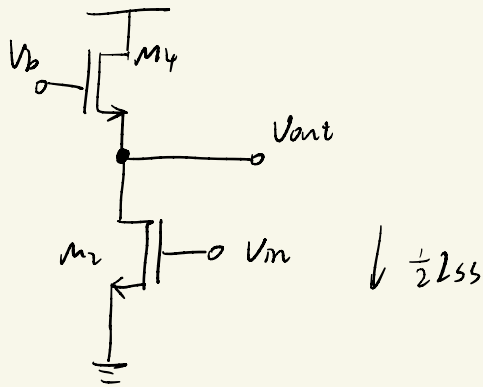

$$A_v = -g_{m2} \cdot \frac{1}{g_{m4}}$$

$$\overline{V_{n,out}^2} = \frac{4kT\gamma}{g_{m2}} A_v^2 + \frac{4kT\gamma}{g_{m4}}$$

$$\overline{V_{n,in}^2} = \frac{\overline{V_{n,out}^2}}{A_v^2} = \frac{4kT\gamma}{g_{m2}} + \frac{4kT\gamma}{g_{m4}} \cdot \frac{g_{m4}^2}{g_{m2}^2}$$

$$= 4kT\gamma \left(\frac{1}{g_{m2}} + \frac{g_{m4}}{g_{m2}^2} \right)$$

$$= \frac{4kT\gamma}{g_{m2}^2} \cdot (g_{m2} + g_{m4})$$

输入热噪声为 $\overline{V_{n,in}^2} = 8kT\gamma \cdot \dfrac{g_{m2} + g_{m4}}{g_{m2}^2}$

$$= 8kT\gamma \cdot \frac{g_{m1} + g_{m3}}{g_{m1}^2}$$