1.

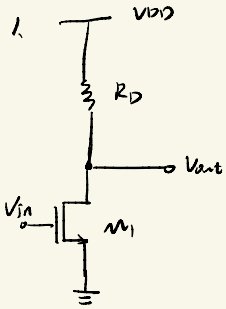


(a). $g_m = \sqrt{2 I_D \mu_n C_{ox} (\frac{W}{L})_1} = \sqrt{2 \times 10^{-3} \times 1.3422 \times 10^{-4} \times 100} = 5.1812\ mS$

$A_v = -g_m R_D = -5.1812 \times 2 = -10.3624$

(b) $I_D = \frac{1}{2} \mu_n C_{ox} (\frac{W}{L})_1 (V_{in} - V_{TH})$

$V_{out} = V_{DD} - I_D R_D$

$A_v = -g_m R_D$

解得 $V_{in} = 1.137V$, $A_v = -11.73$

(c) $V_{in} - V_{TH} - V_{out} = 50 \times 10^{-3}$

$V_{out} = V_{DD} - I_D R_D$

$I_D = \mu_n C_{ox} (\frac{W}{L})_1 \left( (V_{in} - V_{TH}) V_{out} - \frac{1}{2} V_{out}^2 \right)$

$A_v = -g_m R_D$

解得. $A_v = -4$ $V_{in} = 1.145V$

2.

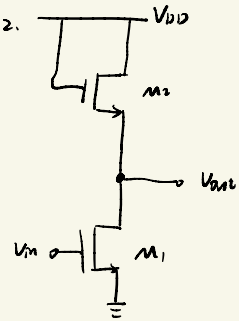


(nmos)

$$A_v = -\frac{g_{m1}}{g_{m1} + g_{m2}} = -\sqrt{\frac{(\frac{W}{L})_1}{(\frac{W}{L})_2}} \frac{1}{1 + \frac{g_{mb2}}{g_{m2}}}$$

$= -2.236$

(pmos)

$$A_{v2} = -\sqrt{\frac{\mu_n (\frac{W}{L})_1}{\mu_p (\frac{W}{L})_2}} = -4.18$$

3.

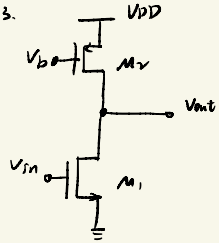


(a) 线性区

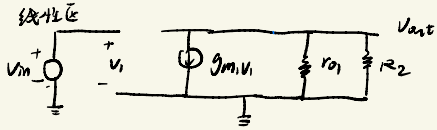


饱和区

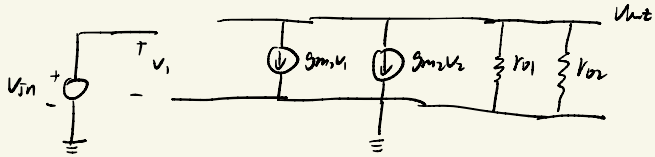


(b) 线性区

$$r_{out} = \frac{r_{o1} R_2}{r_{o1} + R_2}$$

$$A_v = -g_m r_{out} = -g_m \frac{r_{o1} R_2}{r_{o1} + R_2}$$

饱和区

$$r_{out} = \frac{r_{o1} r_{o2}}{r_{o1} + r_{o2}}$$

$$A_v = -g_m r_{out} = -g_m \frac{r_{o1} r_{o2}}{r_{o1} + r_{o2}}$$

(c) $V_{DD} - V_{out} \geq V_{DD} - V_b - |V_{TMp}|$

$V_{out} \leq V_b + |V_{TMp}|$

$V_{out} \geq V_{in} - V_{TMn}$

$V_{in} - V_{TMn} \leq V_{out} \leq V_b + |V_{TMp}|$

4. (a)

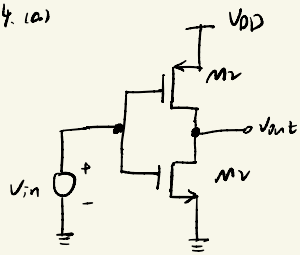


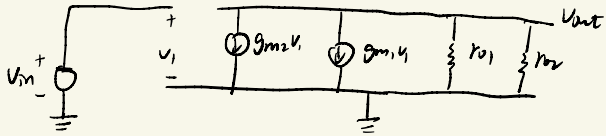


$$V_{out} = -(g_{m1} + g_{m2})\, V_{in}\, (r_{o1} \| r_{o2})$$

$$A_v = \frac{V_{out}}{V_{in}} = -(g_{m1} + g_{m2})\,(r_{o1} \| r_{o2})$$

(b)

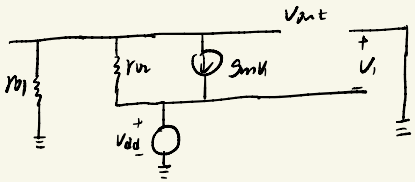


$$\frac{V_{out}}{r_{o1}} = \frac{V_{dd} - V_{out}}{r_{o2}} + g_m V_{dd}$$

$$V_{out}\left(\frac{1}{r_{o1}} + \frac{1}{r_{o2}}\right) = V_{dd}\left(\frac{1}{r_{o2}} + g_m\right)$$

$$A_{vdd} = \frac{V_{out}}{V_{dd}} = \frac{r_{o1} + g_m r_{o1} r_{o2}}{r_{o1} + r_{o2}}$$

$$PSRR = \frac{A_v}{A_{vdd}} = -(g_{m1} + g_{m2})\,\frac{r_{o1} r_{o2}}{r_{o1} + r_{o2}} \cdot \frac{r_{o1} + r_{o2}}{r_{o1} + g_m r_{o1} r_{o2}}$$

$$= -\frac{(g_{m1} + g_{m2})\, r_{o1} r_{o2}}{r_{o1} + g_m r_{o1} r_{o2}}$$

5.

(a)

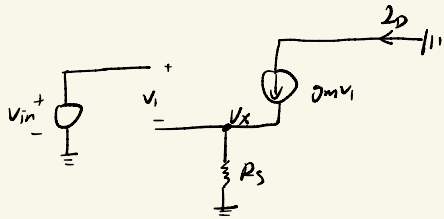


$$I_D = \frac{V_x}{R_S}$$

$$v_1 = V_{in} - V_x$$

$$g_m v_1 = I_D.$$

$$I_D = \frac{V_{in} - v_1}{R_S} = \frac{V_{in} - \frac{I_D}{g_m}}{R_S} = \frac{g_m V_{in} - I_D}{g_m R_S}$$

$$I_D = \frac{\frac{V_{in}}{R_S}}{1 + \frac{1}{g_m R_S}}$$

$$= \frac{g_m V_{in}}{g_m R_S + 1}$$

$$G_m = \frac{g_m}{g_m R_S + 1}$$

(b) $a = \gamma = 0$. $V_{out} = V_{in} - V_{TH}$ $V_{in} = V_{GS} + I_D R_D$

$$V_{DD} - I_D (R_D + R_S) = V_{GS} - V_{TH}$$

$M_1$ 工作于饱和区时. $I_D = \frac{1}{2} \mu_n C_{ox} \left(\frac{W}{L}\right)_1 (V_{GS} - V_{TH})^2$

$$I_D = \frac{1}{2} \mu_n C_{ox} \left(\frac{W}{L}\right)_1 \left(V_{DD} - I_D (R_D + R_S)\right)^2$$

$$I_D = 1.17 \times 10^{-3} A$$

$$V_{in} = V_{DD} - R_D I_D + V_{TH}$$

$$= 1.36 V$$

$$g_m = \sqrt{2 \mu_n C_{ox} \frac{W}{L} I_D} = 5.604 \times 10^{-3} S$$

$$G_m = \frac{g_m}{1+g_m R_s} = 2.64256\times10^{-3}\ S$$

$$A_v = -G_m R_D = -5.285$$

6.

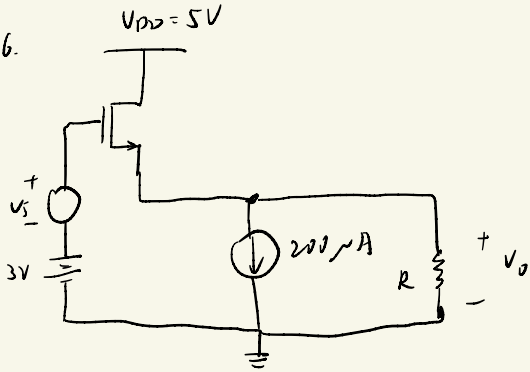


(a) $R\to\infty$

$I_D = 2\times10^{-4}A \qquad V_o = V_i$

$V_G = 3V + V_i$

$V_D = 5V$

$V_{GS} = 3V + V_i - V_o. \qquad V_{DS} = 5 - V_o$

此时在饱和区

$$\frac{V_o}{V_i} = g_m \cdot \frac{1}{g_m} = 1$$

(b) $V_{TH} = V_{TH0} + \gamma\left(\sqrt{2\phi_F + V_{SB}} - \sqrt{2\phi_F}\right)$

$$g_{mb} = g_m \frac{\gamma}{2\sqrt{2\phi_F + V_{SB}}} = \frac{g_m\gamma}{2\sqrt{2\phi_F + V_o}}$$

$$A_v = g_m \frac{1}{g_m + g_{mb}}$$

$$I = \frac{1}{2}\mu_n C_{ox}\frac{W}{L}(3 - V_o - V_{TH})^2 = 200\times10^{-6}A$$

解得 $V_o = 1.49V$

$$A_v = \frac{1}{1+\frac{g_{mb}}{g_m}} = \frac{1}{1+\frac{\gamma}{2\sqrt{2\phi_F+V_0}}} = 0.9383$$

(c).

$$I = 2\times10^{-4} + \frac{V_0}{R} = \frac{1}{2}\mu_n C_{ox}\frac{W}{L}(3-V_0-V_{TN})^2$$

$$A_v = g_m\left(\frac{1}{g_m+g_{mb}} \parallel R\right) = 0.92$$

(d) 同(c) $A_v = 0.831$

7.

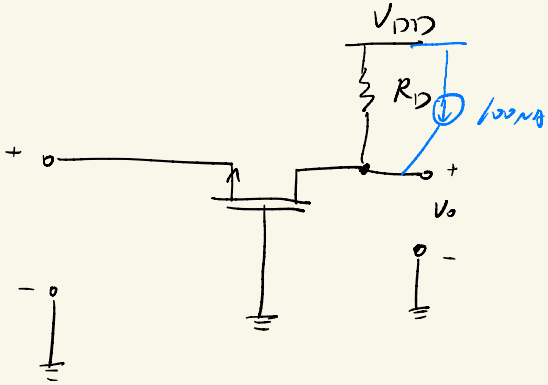


① $$r_m = \frac{r_o+R_D}{1+g_m r_o}$$

$$r_o = \frac{1}{\alpha I_D} = \frac{1}{0.01\times100\times10^{-6}} = 10^6\,\Omega$$

$$g_m = \sqrt{2I_D\mu_n C_{ox}\frac{W}{L}} = \sqrt{2\times100\times10^{-6}\times200\times10^{-6}\times100} = 2\times10^{-3}\,S$$

$$r_m = \frac{10^6+10\times10^3}{1+2\times10^{-3}\times10^6} = \frac{10^3(10+10^3)}{2\times10^3+1} \approx 5+500 = 500\,\Omega$$

② $R_D = 10^6\,\Omega$ 时

$$r_m = \frac{10^6+10^6}{2\times10^3+1} \approx 1k\Omega$$

8.

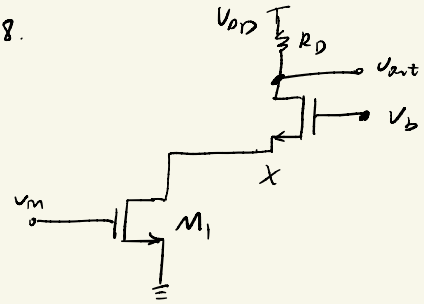


(a) $V_{GS} - V_{TH} = V_{DS} - 0.05$

$V_{in} - V_{TH1} = V_x - 0.05$

$V_x - 0.05 = V_{in} - V_{TH1} = \sqrt{\dfrac{2I}{\mu_n C_{ox}(\frac{W}{L})_1}} = 0.27295\,V$

$V_x = 0.32295\,V$

$V_b - V_x - V_{TH1} = \sqrt{\dfrac{2I}{\mu_n C_{ox}(\frac{W}{L})_2}} = 0.61\,V$

$V_b = 0.61 + 0.32295 + 0.7 = 1.63\,V$

(b) $g_{m1} = \sqrt{2 I_{D1} \mu_n C_{ox} (\frac{W}{L})_1} = 3.664\,mS$

$A_v = -g_{m1}(R_D \parallel g_{m2} r_{ds2} r_{ds1}) \approx -3.644$

(c) 先假设 $M_1$ 是线性区

当 $M$ 在线性区边缘时有，$V_x = V_{in} - V_{TH1}$

$I = \frac{1}{2}\mu_n C_{ox}(\frac{W}{L})_1 (V_{in} - V_{TH1})^2$

$I = \frac{1}{2}\mu_n C_{ox}(\frac{W}{L})_2 (V_b - V_x - V_{TH1})^2$

$V_{out} = V_{DD} - I R_D$

$V_b = 1.63\,V$

解得 $V_x = 0.288\,V$，　$V_{in} = 0.988\,V$

$I = 0.557\,mA$

$V_{out} = V_{DD} - I R_D = 2.443\,V$

此时 $V_{out} - V_x = 2.15V > V_b - V_x - V_{TH} = 0.645V$.

$M_2$处于饱和区

假设正确

当 $V_{in} = V_{TH}$时. $I = 0$. $V_{out} = 3V$

$V_{out}$摆幅为 $2.443 \sim 3V$

(d) $V_{out} = 2.443V$时. $V_x = V_{out} - 2.15 = 0.288V$

$V_{out} = 3V$时. $V_x = V_b - V_{TH} = 0.933V$

9.

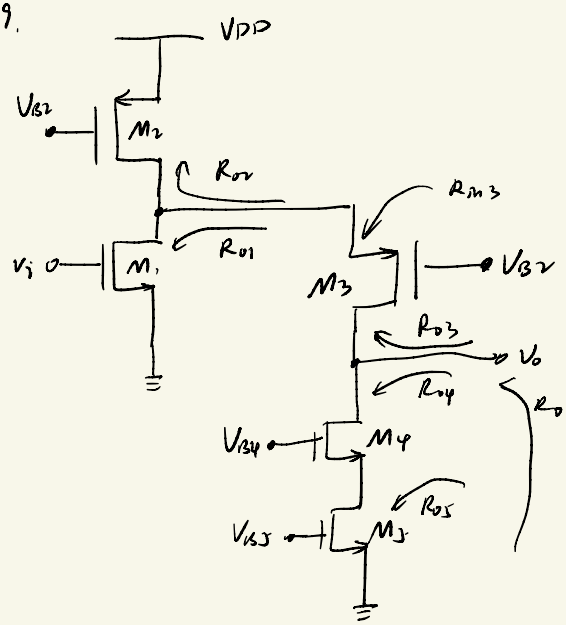


(a) $R_{o1} = r_o$ $R_{o2} = r_o$ $R_{o3} = r_o$ $R_{o4} = g_m r_o^2$ $R_{o5} = \frac{1}{2} g_m r_o^2$

$R_{in3}$

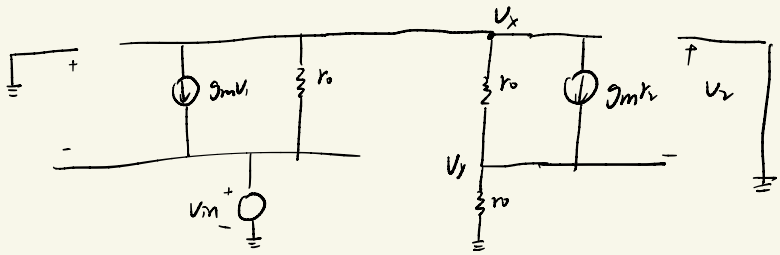

$$g_m v_{in} + \frac{v_{in} - v_x}{r_o} = \frac{v_y}{r_o}$$

$$\frac{v_x - v_y}{r_o} - g_m v_y = \frac{v_y}{r_o}$$

$$I_{in} = \frac{v_y}{r_o}$$

$$\frac{v_{in}}{I_{in}} = \frac{(3 + g_m r_o) r_o}{1 + g_m r_o}$$

$$= \frac{\left(\frac{3}{g_m} + r_o\right) r_o}{\frac{1}{g_m} + r_o}$$

$$\approx \frac{r_o^2}{r_o} = r_o$$

(b) $R_o = \left(g_m r_o \cdot \frac{r_o}{2}\right) \| g_m r_o^2$

$$= \frac{\frac{1}{2} g_m r_o^2 \cdot g_m r_o^2}{\frac{1}{2} g_m r_o^2 + g_m r_o^2}$$

$$= \frac{g_m r_o^2}{3}$$

(c). $V_o \to$ AC ground

此时 $M_3$ 以下的电阻是 0

$$R_{in} = \frac{1}{g_m}$$

$$R_{o2} = r_o \gg R_{in}$$

当 $V_i$ 变化时，电流主要会走 $M_3$ 支路

$$G_m \approx \frac{1}{R_{in}} = g_m$$

(d)

$$\frac{V_o}{V_i} = -g_m R_o = -\frac{1}{3} g_m^2 r_o^2 = -300$$

(e).

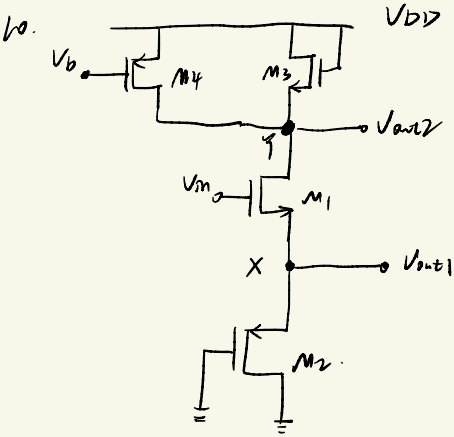


对于 Vout1. 是源随器.

M3. M4 无影响.

$$\frac{V_{out1}}{V_{in}} = \frac{\frac{1}{g_{m2}} \| r_{o2}}{\frac{1}{g_{m2}} \| r_{o2} + \frac{1}{g_{m1}}}$$

对于 Vout2, 会成为 $\frac{1}{g_{m3}} \| r_{o3} \| r_{o4}$

$$\frac{V_{out2}}{V_{in}} = -\frac{\frac{1}{g_{m3}} \| r_{o3} \| r_{o4}}{\frac{1}{g_{m1}} + \frac{1}{g_{m2}} \| r_{o2}}$$

$A_{v1} > A_{v2}$

11.

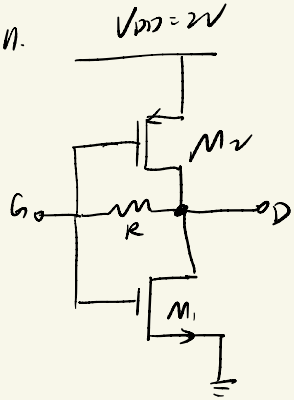


(a) G. D 开路

$$I = \frac{1}{2}\mu_p C_{ox}\left(\frac{W}{L}\right)_2 (V_G - V_{DD} + 0.5)^2 = \frac{1}{2}\mu_n C_{ox}\left(\frac{W}{L}\right)_1 (V_G - 0 - 0.5)^2$$

$$V_{DD} - V_G - 0.5 = V_G - 0.5$$

$$V_G = 1V, \Rightarrow I = 125\,nA$$

(b)

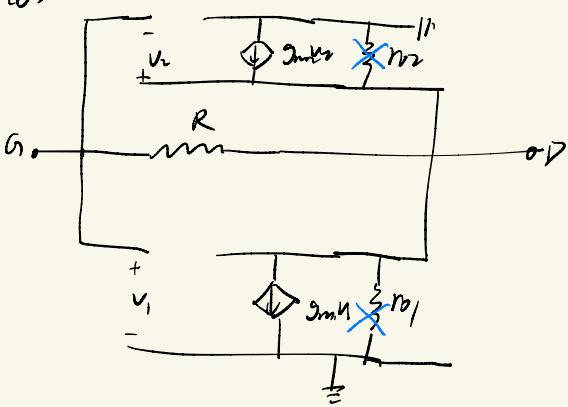


$r_{o1} = r_{o2} = \infty$

$V_G = V_1 = V_3$

$V_G - V_0 = i_1 R$

$$A_v = \frac{V_D}{V_{G1}} = g_{m2} - g_{m1} + \frac{1}{R}$$

$$g_{m1} = \sqrt{2 I_{D1} \mu_n C_{ox} \left(\frac{W}{L}\right)_1} = 5\times10^{-4}\,S$$

$$g_{m2} = \sqrt{2 I_{D2} \mu_p C_{ox} \left(\frac{W}{L}\right)_2} = g_{m1} = 5\times10^{-4}\,S$$

$$A_v = \frac{1}{R} = 10^{-6}$$

(c)

$$r_{o1} = r_{o2} = \frac{1}{a I_D} = 1.6\times10^{6}\,\Omega$$

$$A_v = \frac{V_D}{V_{G1}} = \frac{r_{o1}}{2R + r_{o1}} = 0.44$$

(d)

$$g_{m2} V_{G1}' - \frac{V_D}{r_{o2}} + \frac{V_{G1}' - V_D}{R} = g_{m1} V_{G1}' + \frac{V_D}{r_{o1}}$$

$$\frac{V_{sig} - V_{G1}'}{r} = \frac{V_{G1}' - V_D}{R}$$

$$A_v = \frac{V_D}{V_{sig}} = \frac{1}{1 + 1.02\times10^{6}\left(\frac{1}{r_{o1}} + \frac{1}{r_{o2}}\right)}$$

(e)

max: $V_{GS2} = V_G - V_{DD} = V_{TM2}$

$$V_D = V_{DD} + V_{TM2} = 2 - 0.5 = 1.5V$$

min: $V_{GS1} = V_G = V_{TM1}$

$$V_D = V_{TM1} = 0.5V$$

12.

(1) $V_{GS3} - V_{TM3} = V_{G3} - V_{DD} - V_{TM3} = V_{DS5} - V_{TM3}$

$$V_{GS2} - V_{TM2} = V_{G2} - V_{TM2} = V_{D1} - V_{TM2} = V_{DS4} - V_{TM2}$$

$$I_1 = \frac{1}{2}\mu_n C_{ox} \frac{W_1}{L_1} (V_{in} - V_{TM1})^2$$

$$I_4 = \frac{1}{2}\mu_n C_{ox} \frac{W_4}{L_4} (V_{G2} - V_{TM4})^2$$

$$I_5 = \frac{1}{2}\mu_p C_{ox}\frac{W_5}{L_5}\left(V_{DD} - V_{G3} - |V_{TH}|\right)^2$$

$$I_6 = \frac{1}{2}\mu_n C_{ox}\frac{W_6}{L_6}\left(V_{B2} - V_{G2} - V_{TH6}\right)^2$$

$$I_7 = \frac{1}{2}\mu_p C_{ox}\frac{W_7}{L_7}\left(V_{G3} - V_{B3} - |V_{TH7}|\right)^2$$

$$I_6 + I_7 = I_5 = I_1 + I_4$$

$$I_{out} = I_2 = I_3$$

$$I_2 = \frac{1}{2}\mu_n C_{ox}\frac{W_2}{L_2}\left(V_{G2} - V_{TH2}\right)^2$$

$$I_3 = \frac{1}{2}\mu_p C_{ox}\frac{W_3}{L_3}\left(V_{DD} - V_{G3} + V_{TH3}\right)^2$$

(2)

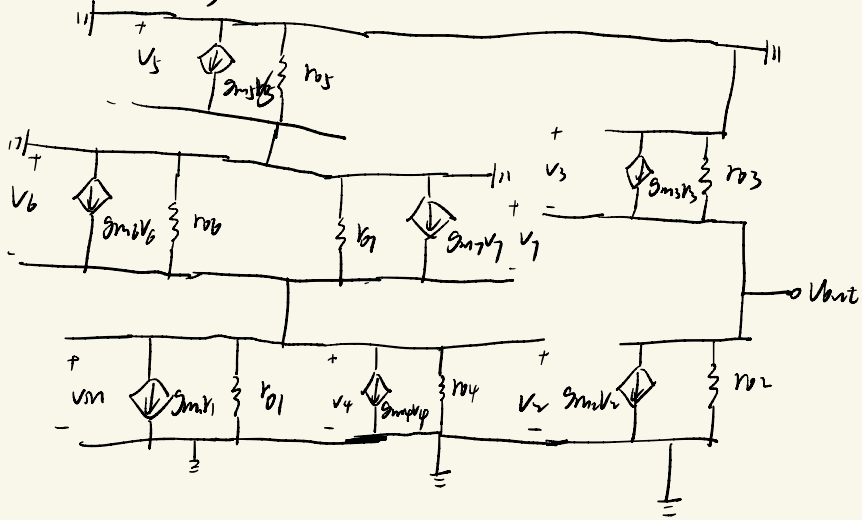


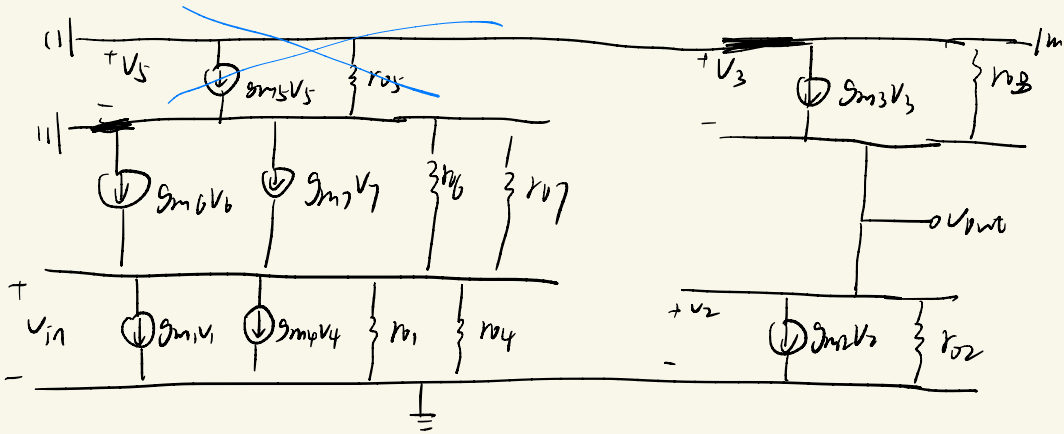

$$A_v = \frac{V_{out}}{V_{in}} = (g_{m6} + g_{m7})(r_{o6} \| r_{o7}) - (g_{m1} + g_{m4})(r_{o1} \| r_{o4})$$

$$-g_{m2} r_{o2}$$