5.1

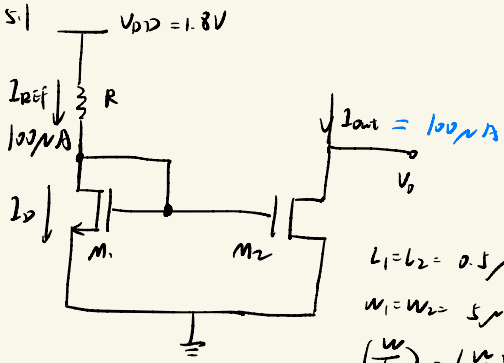

$L_1 = L_2 = 0.5\mu m$

$W_1 = W_2 = 5\mu m$

$\left(\frac{W}{L}\right)_1 = \left(\frac{W}{L}\right)_2 = 10$

$V_{TH} = 0.4V$. $\mu_n C_{ox} = 500\mu A/V^2$

(a) $V_{D1} = V_{DD} - I_{REF} \cdot R$

M_1 工作于饱和区

$$I_D = I_{REF} = \frac{1}{2}\mu_n C_{ox}\left(\frac{W}{L}\right)_1 (V_{DD} - I_{REF}R - V_{TH})^2$$

$$100\times10^{-6} = \frac{1}{2}\times500\times10^{-6}\times10\times(1.8 - 100\times10^{-6}R - 0.4)^2$$

$$1.4 - 10^{-4}R = \sqrt{\frac{1}{25}} = \frac{1}{5}$$

$$R = 12k\Omega$$

(b) 要求 M_2 饱和

$$V_o > V_{D1} - V_{TH} = V_{DD} - I_{REF}R - V_{TH} = 0.2V$$

(c) $\lambda = 0.4V^{-1}$

$$r_o = \frac{1}{\lambda I_D} = \frac{1}{0.4\times100\frac{\mu A}{V}} = \frac{10^6}{40}\Omega = 25k\Omega$$

(d) I_o 变化由 r_o 引起. $\Delta I_o = \frac{\Delta V_o}{r_o} = \frac{0.5V}{25k\Omega} = 2\times10^{-5}A$

5.2 $|V_{THp}| = 0.6V$. $\mu_p C_{ox} = 100\,\mu A/V^2$. $L = 1\mu m$. $W = 10, 20, 40\ \mu m$.

其实相当于左侧只有 M_1

$\frac{W}{L} = 10, 20, 40.$

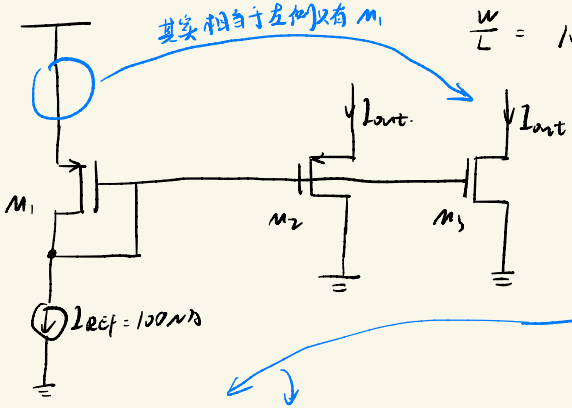

$$V_{SG} = \sqrt{\frac{2I}{\mu_p C_{ox} \frac{W}{L}}} + |V_{THp}|$$

$$= \sqrt{\frac{2I}{100\times10^{-6}\ \frac{W}{L}}} + |V_{THp}|$$

M_1	M_2	M_3 ($\frac{W}{L}$)	V_{SG2}	V_{SG3} (V)	I_{out1}	I_{out2}	I_{out3} (μA)
10	20	40	1.047	1.047	100 REF	200	400
20	10	40	0.916	0.916	100 REF	50	200
40	10	20	0.8236	0.8236	100 REF	25	50

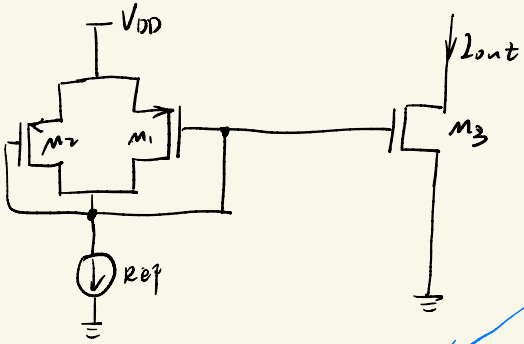

$M_1 + M_2$	M_3	V_{SG}	I_{out}
10+20=30	40	0.85	133

$10+40=50$	20	0.8	40
$20+40=60$	10	0.78	16.7

5.3 $\mu_n C_{ox}\left(\frac{W}{L}\right)_n = 4\,mA/V^2$ $I_{in} = 0.18\,mA$ $\lambda=0$ $\gamma=0$.

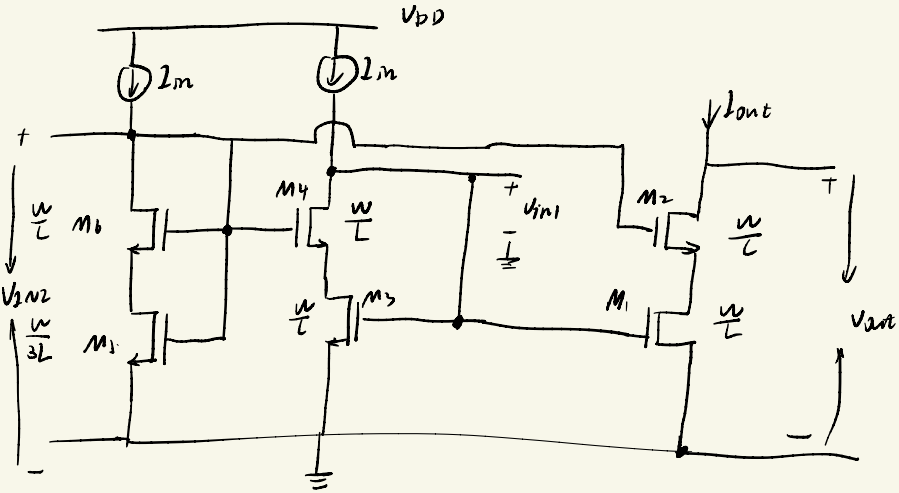

minimum 时 V_{out}

M_2 刚好都工作于饱和区

M_2: $V_{out} - V_{S2} \geq V_{in2} - V_{S2} - V_{TH2}$

$V_{out} \geq V_{in2} - V_{TH2} = V_{od}$

$I_{in} = \frac{1}{2}\mu_n C_{ox}\frac{1}{4}\left(\frac{W}{L}\right)_n V_{od}^2$

$0.18\times10^{-3} = \frac{1}{2}\times\frac{1}{4}\times 4\times10^{-3}\,V_{od}^2$

$V_{od} = 0.6V$

$V_{out} \geq V_{od} = 0.6V$

5.4

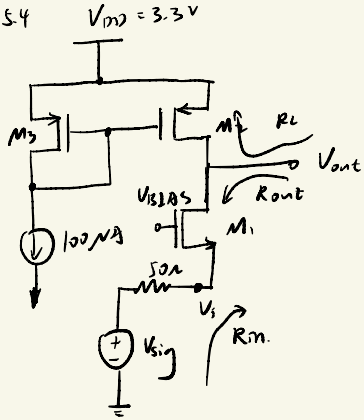

$\mu_n C_{ox}\left(\frac{W}{L}\right)_n = \mu_p C_{ox}\left(\frac{W}{L}\right)_p = 4mA/V^2$

$|V_{TH}| = 0.8V \qquad \lambda = \frac{1}{20}V^{-1} \quad 1/20$

(a) $\lambda = 0$,

由于 M_3 和 M_2 构成电流镜

$I_2 = I_3 = 100\mu A$

$V_{S1} = 50\Omega \cdot 100\mu A = 5mV$

$I_2 = I_1 = 100\mu A = \frac{1}{2}\mu_n C_{ox}\left(\frac{W}{L}\right)_n (V_{BIAS} - V_{S1} - V_{TH})^2$

$100\times10^{-6} = \frac{1}{2}\times 4\times10^{-3}\times(V_{BIAS} - 5mV - 0.8)^2$

$V_{BIAS} = 0.8 + 0.005 + 0.2236 = 1.0286\ V$

(b) 对于 M_3.

$r_{o3} = \frac{1}{\lambda I_3} = \frac{20}{100\times10^{-6}} = 2\times10^5\Omega$

对于 M_2

$r_{o2} = \frac{1}{\lambda I_2} = 2\times10^5\Omega$

对于 M_1

$r_{o1} = \frac{1}{\lambda I_1} = 2\times10^5\Omega$

$g_{m1} = \sqrt{2I_1\mu_n C_{ox}\left(\frac{W}{L}\right)_n} = 0.00089442\ S = 0.89442\ mS$

(c)

$R_{in} = \frac{r_{o1} + r_{o2}}{1 + g_{m1} r_{o1}} = 2223.638\Omega$

(d) $R_{out} = 50\Omega + r_{o1} + g_{m1} r_{o1} \cdot 50\Omega$

$= 208994.27\Omega$

$R_L = r_{o2} = 2\times10^5\Omega$

(e) $\frac{V_o}{V_i} = \frac{R_L}{R_{in}} = 89.9427$

$\frac{V_i}{V_{sig}} = \frac{R_{in}}{R_{in}+50\Omega}$

$\frac{V_o}{V_{sig}} = \frac{R_L}{R_{in}+50\Omega} = 87.965$

(f) $I_3 = \frac{1}{2}\mu_p C_{ox}\left(\frac{W}{L}\right)_p (V_G - 3.3 + 0.8)^2$

$100\times10^{-6} = \frac{1}{2}\times4\times10^{-3}(V_G - 2.5)^2$

$V_G = 2.7236V$ (숫자) 또 $V_G = 2.2764V$

$V_{DS2} \le V_{GS2} - V_{TH}$

$V_D \le V_G + V_{TH} = 2.2764 + 0.8 = 3.0764V$

$V_{DS1} \ge V_{GS1} - V_{TH}$

$V_D \ge V_{GS1} - V_{TH} = 0.2286V$

$2.59876mV \le V_{sig} = \frac{V_o}{87.965} \le 34.973mV$

swing of $V_{sig} = 32.37424mV$

5.5 $\frac{W}{L} = 10$. $\mu_n C_{ox} = 0.4\ mA/V^2$. $V_{TH} = 0.5V$, $\lambda = \frac{1}{18} V^{-1}$

$I_{REF} = 180\ \mu A$

(a) $\lambda = 0$

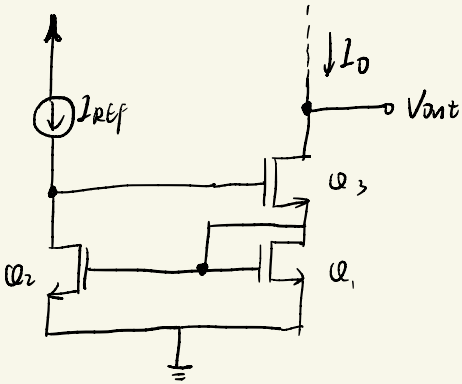

对 Q_1,

$$I_0 = \frac{1}{2}\mu_n C_{ox} \frac{W}{L} V_{OD1}^2$$

对于 Q_2.

$$I_{REF} = \frac{1}{2}\mu_n C_{ox} \frac{W}{L} V_{OD2}^2$$

$$V_{OD2} = 0.3V = V_{GS} - V_{TH}$$

$$V_{GS} = 0.8V$$

$$I_0 = \frac{1}{2}\mu_n C_{ox} \frac{W}{L} (V_G - V_{TH})^2 = I_{REF} = 180\ \mu A$$

$$V_{OD1} = V_G - V_{TH} = V_{OD2} = 0.3V$$

$$V_{GS} = 0.8V$$

(b) $I = \frac{1}{2}\mu_n C_{ox}\frac{W}{L}V_{OD}^2(1+\lambda V_{DS})$

对于 Q_3, $I_3 = \frac{1}{2}\mu_n C_{ox}\frac{W}{L}V_{OD3}^2 = I_1$

$V_{OD3} = V_{OD1}$

$V_{D2} - V_{D1} = V_{D1} - 0$

$V_{D2} = 2V_{D1} = 2V_{OD1} = 1.6V$

$V_{DS2} = V_{D2} = 1.6V$. $V_{DS1} = 0.8V$

$$\frac{I_1}{I_{REF}} = \frac{1+\lambda V_{DS1}}{1+\lambda V_{DS2}} = \frac{1+\frac{1}{18}\times 0.8}{1+\frac{1}{18}\times 1.6} = 0.959$$

$I_1 = 0.959 I_{REF} = 172.653\,\mu A$

$\Delta I = -7.347\,\mu A$

(c)

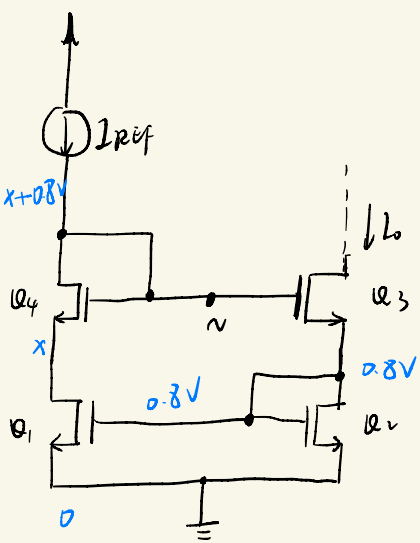

$I_{REF} = \frac{1}{2}\mu_n C_{ox}\frac{W}{L}V_{OD4}^2$

$V_{OD4} = 0.3V$

$V_{GS4} = V_{DS4} = 0.8V$

Q_1 和 Q_2 中.

$V_{OD1} = 0.3V$

$V_{GS1} = 0.8V$

$I_o = \frac{1}{2}\mu_n C_{ox}\frac{W}{L}(V_{GS1} - V_{TH})^2 = I_{REF} = 180\,\mu A$

(d) $V_{DS3} \geq V_{GS3} - V_{TH}$

$V_o \geq V_{GS2} + V_{GS3} - V_{TH}$

$V_o \geq 2V_{OD} + V_{TH} = 2 \times 0.3 + 0.5 = 1.1V$

(e) $R_{out}(a) = g_{m3} r_{o3} r_{o2}$

$R_{out}(b) = g_{m3} r_{o3} r_{o2}$

$\rightarrow R_o$

$R_o = g_{m3} \cdot r_{o2} \cdot r_{o3} = \sqrt{2 I_{REF} \mu_n C_{ox} \frac{W}{L}} \cdot \left(\frac{1}{\lambda I_{REF}}\right)^2$

$= 12 M\Omega = 1.2 \times 10^7 \Omega$

(f) $I_o = \frac{1}{2} \mu_n C_{ox} \frac{W}{L} V_{OD3}^2 (1 + \lambda(V_o - 0.8))^2$

$\Delta I_o = \frac{\Delta V_o}{R_o} = \frac{1}{1.2 \times 10^7} = 8.\dot{3} \times 10^{-8} A$

$\frac{\Delta I_o}{I_o} = \frac{8.\dot{3} \times 10^{-8} A}{180 \mu A} = 0.046\%$

5.6 $\left(\frac{W}{L}\right)_{0,1} = \frac{20}{0.5} = 40$ $\left(\frac{W}{L}\right)_{2,3} = \frac{60}{0.5} = 120$

$I_{REF} = 100\mu A$ $V_{THN} = 0.7V$ $\mu_n C_{ox} = 1.34225 \times 10^{-4} A/V^2$

$\lambda = 0.1 V^{-1}$

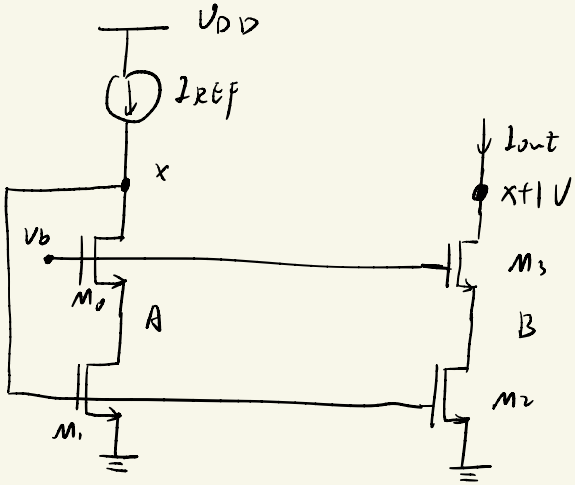

(a) $\lambda = \gamma = 0$

保证 M_1 饱和的条件下:

$$I_{REF} = \frac{1}{2}\mu_n C_{ox}\left(\frac{W}{L}\right)_{0,1}(V_x - V_{THN})^2$$

$$100 \times 10^{-6} = \frac{1}{2} \times 40 \times 1.34225 \times 10^{-4} (V_x - 0.7)^2$$

$$V_x = 0.893 V$$

M_0 也需要饱和工作.

$$I_{REF} = \frac{1}{2}\mu_n C_{ox}\left(\frac{W}{L}\right)_{0,1} V_{ODO}^2$$

$$V_{ODO} = V_x - 0.7 = 0.193V = V_b - V_{D1} - V_{THN}$$

$$V_{DS0} \geq V_{GS0} - V_{TH}$$

$$V_x \geq V_b - V_{TH}$$

$$V_b \leq V_x + V_{TH} = 0.893 + 0.7 = 1.593V$$

M_1 饱和工作：

$$V_{DS1} \geq V_{GS1} - V_{TH}$$

$$V_b - V_{TH} - V_{OD} \geq V_{GS1} - V_{TH}$$

$$V_b \geq V_{OD} + V_{GS1} = V_x + V_{OD} = 1.086V$$

$1.086V \leq V_b \leq 1.593V.$ $\qquad V_x = 0.893V$

(b) $$\frac{I_{out}}{I_{REF}} = \frac{\left(\frac{W}{L}\right)_{2,3}}{\left(\frac{W}{L}\right)_{2,1}} = 3$$

$$I_{out} = 3I_{REF} = 300\mu A$$

$$R_{out} = g_{m3} r_{o3} r_{o2} = \sqrt{2I_{out}\mu_n C_{ox}\left(\frac{W}{L}\right)_{2,3}} \cdot \left(\frac{1}{\lambda I_{out}}\right)^2$$

$$= 3.454144 \times 10^6 \Omega$$

$$\Delta I_{out} = \frac{\Delta V}{R_{out}} = 2.895 \times 10^{-7} A$$

5.] $\left(\frac{W}{L}\right)_{1,2,3,4,6} = \frac{W}{L}$ $\left(\frac{W}{L}\right)_5 = \frac{W}{3L}$

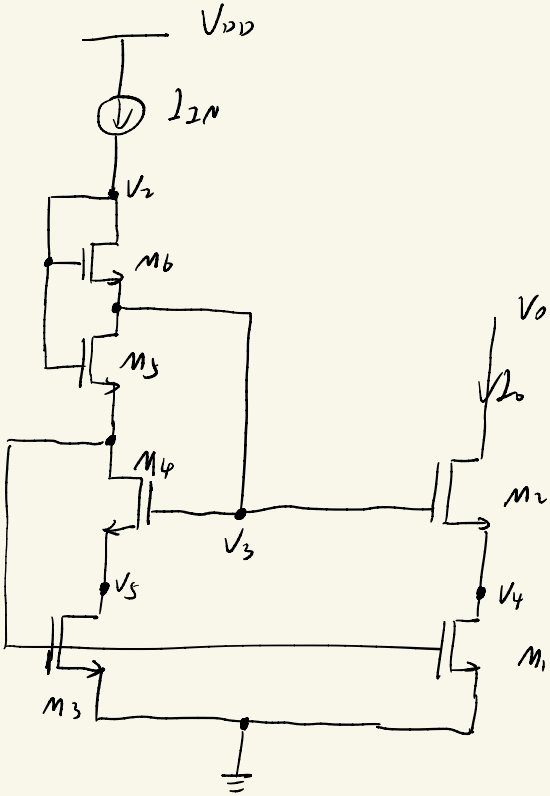

分析 M_6: $V_{GS6} = V_2 - V_3$ $V_{DS6} = V_2 - V_3$

M_6 一定饱和 ($V_2 - V_3 - V_{TH} > 0$，否则截止)

$$I_{IN} = \frac{1}{2}\mu_n C_{ox}\frac{W}{L}(V_2 - V_3 - V_{TH})^2$$

分析 M_5: $V_{GS5} = V_2 - V_{SS}$ $V_{DS5} = V_3 - V_{SS}$

($V_2 - V_{SS} > V_{TH}$，否则截止)

$V_{GS5} - V_{TH} = V_2 - V_{SS} - V_{TH} > V_3 - V_{SS} = V_{DS5}$

即 M_5 一定工作于线性区

M_6:

$$I_{1N} = \frac{1}{2}\mu_n C_{ox}\frac{W}{L}(V_2 - V_3 - V_{TH})^2 \qquad (V_2 - V_3 - V_{TH} > 0)$$

M_5:

$$I_{1N} = \frac{1}{2}\mu_n C_{ox}\frac{W}{3L}\left(2(V_2 - V_{SS} - V_{TH})(V_3 - V_{SS}) - (V_3 - V_{SS})^2\right)$$

M_3: $M_1 \rightarrow$ $I_{1N} = I_0$,

$$I_{1N} = I_0 = \frac{1}{2}\mu_n C_{ox}\frac{W}{L}(V_{SS} - V_{TH})^2$$

$$V_5 > V_{SS} - V_{TH}$$

M_2: $I_0 = I_{1N} = \frac{1}{2}\mu_n C_{ox}\frac{W}{L}(V_3 - V_4 - V_{TH})^2$

$$\longrightarrow \quad V_2 - V_3 = V_3 - V_4 = V_{SS}$$

分析 M_4. $V_{DS4} = V_{SS} - V_5$ $\qquad V_{GS4} = V_3 - V_5$

假设 M_4 工作于饱和区

$$I_{1N} = \frac{1}{2}\mu_n C_{ox}\frac{W}{L}(V_3 - V_5 - V_{TH})^2$$

$$\rightarrow \quad V_2 - V_3 = V_3 - V_4 = V_3 - V_5 = V_{SS} > V_3 - V_{TH}$$

$$\rightarrow \quad V_4 = V_5$$

$$V_{DS4} = V_{SS} - V_5 \qquad V_{GS4} = V_3 - V_5$$

M_4 饱和条件: $V_{DS4} > V_{GS4} - V_{TH}$

$V_3 - 2V_5 = V_{SS} - V_5 > V_3 - V_5 - V_{TH}$

$V_{TH} > V_5$

M_2 飽和条件: $V_{DS2} \geq V_{GS2} - V_{TH}$

$V_0 - V_4 \geq V_{GS2} - V_{TH}$

$V_0 \geq V_4 + V_{GS2} - V_{TH} \geq V_{SS} - 2V_{TH} + V_{GS2} = 2V_{DD}$

$V_0 \geq 2V_{DD}$

$V_2 \geq V_3 + V_{TH} = V_4 + V_{SS} + V_{TH} \geq V_{SS} - V_{TH} + V_{SS} + V_{TH} = 2V_{SS}$

$V_2 \geq 2(V_{SS} - V_{TH}) + 2V_{TH} = 2V_{DD} + 2V_{TH}$

5.8 $\left(\frac{W}{L}\right)_{1-4} = 100$ $\quad I_{SS} = 2I_1 = 0.5\,mA$ $\quad V_{DD} = 3V$

$\lambda_n = 0.1\,V^{-1}$ $\quad \lambda_p = 0.2\,V^{-1}$ $\quad V_{THN} = 0.7V$ $\quad V_{THP} = -0.8V$

$\gamma = 0$ $\quad \mu_n C_{ox} = 1.34225 \times 10^{-4}\,A/V^2$

$\mu_p C_{ox} = 0.3855 \times 10^{-4}\,A/V^2$

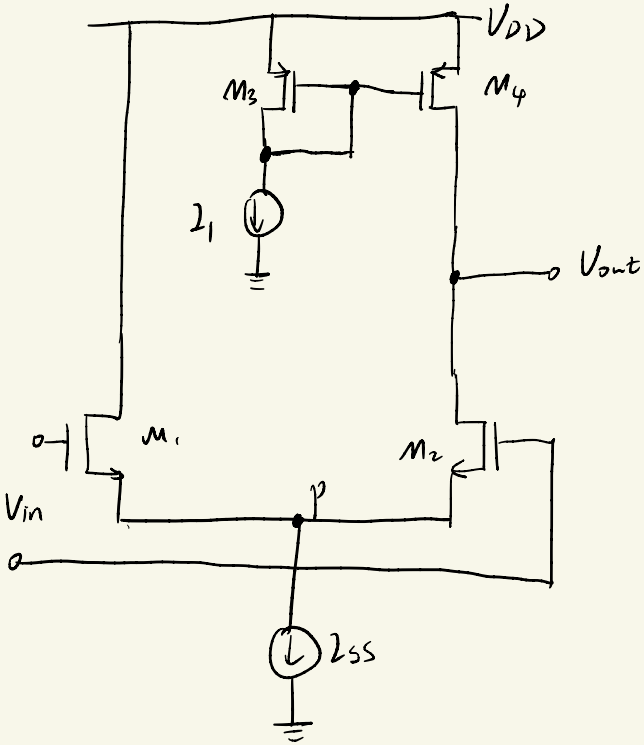

$V_{out} = 2.7\,V$

$V_{DS} = 2.7 - 3.3 = -0.6\,V$

$V_{OD} = -0.661\,V$

(a)

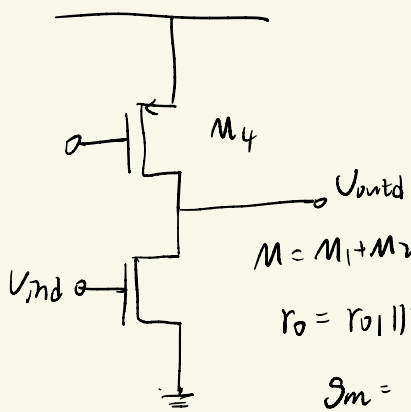

$M = M_1 + M_2$

$r_o = r_{o1} \| r_{o2} = \frac{1}{2} r_{o1,2}$

$g_m = 2 g_{m1,2}$

$$A_v = \frac{V_{outd}}{V_{ind}} = -2 g_{m1,2} \cdot \left(r_{o4} \| \tfrac{1}{2} r_{o1,2}\right)$$

$$= -2\sqrt{2I_1 \mu_n C_{ox} \frac{W}{L}} \left(\frac{1}{\lambda_p I_1} \,\|\, \frac{1}{2\lambda_n I_1} \right) \quad \left(\begin{array}{l} r_{o4} = 10^4\,\Omega \\ r_{o1,2} = 2\times10^4\,\Omega \end{array} \right)$$

$$= -36.6367$$

(b)

M_2 饱和工作:

$$V_{out} - V_p \geq V_{inCM} - V_p - V_{TH,N}$$

$$V_{out} \geq V_{inCM} - V_{TH,N} = 1.3 - 0.7 = 0.6V$$

M_4 饱和工作:

$$V_{out} - V_{DD} \leq V_G - V_{DD} - V_{THp}$$

$$V_{out} \leq V_G + 0.8V$$

$$I_1 = \frac{1}{2}\mu_p C_{ox} \frac{W}{L} (V_G - V_{DD} - V_{THp})^2$$

$$\frac{1}{2} \times 0.5\times10^{-3} = \frac{1}{2} \times 100 \times 0.3835 \times 10^{-4} (2.2 - V_G)^2$$

$$2.2 - V_G = 0.361V$$

$$V_G = 1.839V$$

$$V_{out} \leq 1.839 + 0.8 = 2.639V$$

$$0.6V \leq V_{out} \leq 2.639V$$

V_{out} swing = 2.039 V

5.9 $\left(\frac{W}{L}\right)_{1-5} = 100$ $I_{D5} = 0.5\,mA$ $V_{DD} = 3V$

$\lambda_n = 0.1V^{-1}$ $\lambda_p = 0.2V^{-1}$ $|V_{THP}| = 0.8V$ $\gamma = 0$

$\mu_n C_{ox} = 1.34225 \times 10^{-4} A/V^2$ $\mu_p C_{ox} = 0.3835 \times 10^{-4} A/V^2$

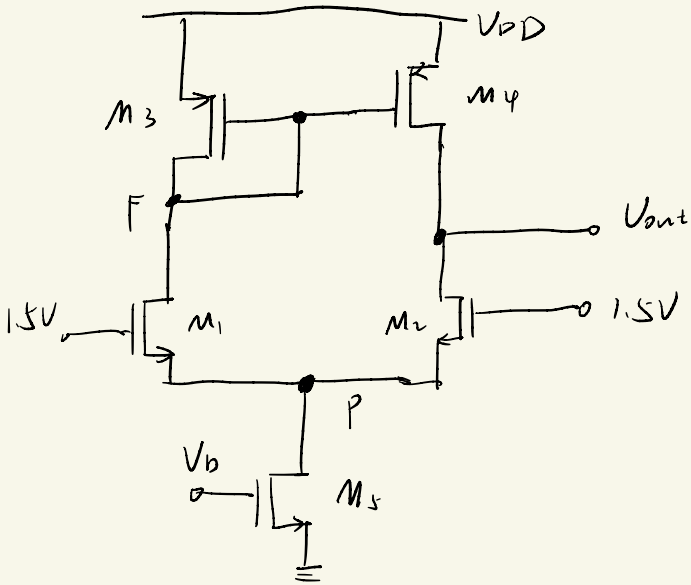

(a)

$$I_3 = \frac{1}{2}\mu_p C_{ox}\frac{W}{L}\cdot\left[V_F - V_{DD} - V_{THP} - 10^{-3}V\right]^2\left(1+\lambda_p(V_F - V_{DD})\right)$$

$$I_4 = \frac{1}{2}\mu_p C_{ox}\frac{W}{L}\left(V_F - V_{DD} - V_{THP}\right)^2 \qquad \left(1+\lambda_p(V_{out} - V_{DD})\right)$$

$\Rightarrow I_3 = I_4 = 0.25\,mA$

$$0.25\times10^{-3} = \frac{1}{2}\times 0.3835\times10^{-4}\times100\times\left(V_F-3+0.8-10^{-3}\right)^2\left(1+0.2(V_F-3)\right)$$

$$0.13 = (V_F-2.201)^2\left(1+0.2(V_F-3)\right)$$

$$0.65 = \left(V_F^2+4.844401-4.402V_F\right)\left(2+V_F\right)$$

$$= V_F^3 - 4.402V_F^2 + 4.844401V_F + 2V_F^2 - 8.804V_F + 9.688802$$

$$V_F^3 - 2.402V_F^2 - 3.959599V_F + 9.038802 = 0$$

$V_F = -1.9625V$ (舍去) $\quad 1.79V, \quad 2.5778V$

pmos: $V_F < 2.201V. \rightarrow V_F = 1.79V$

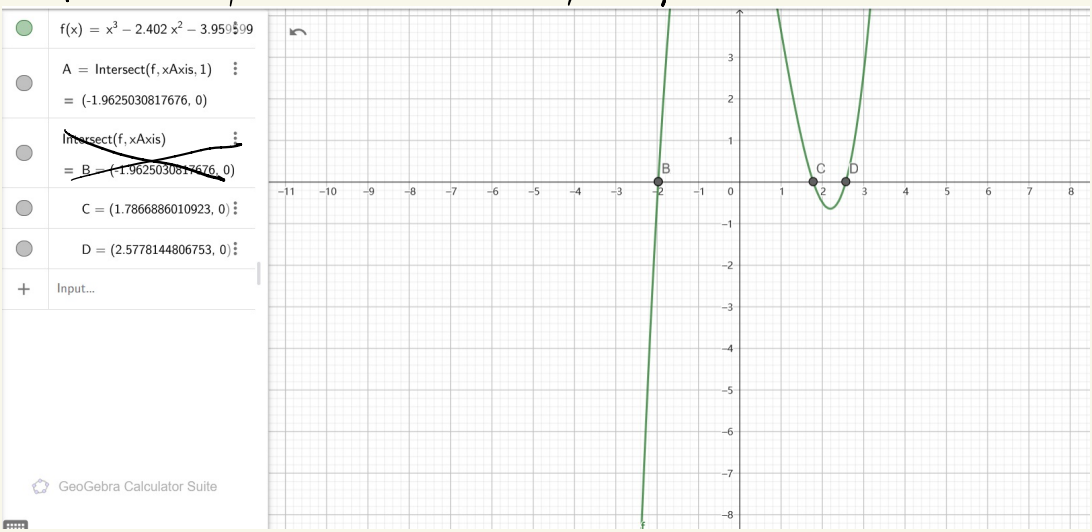

$$0.25\times10^{-3} = \frac{1}{2}\times 0.3835\times10^{-4}\times100\times(1.79-3+0.8)^2\left(1+0.2(V_{out}-3)\right)$$

$$V_{out} = 1.8161V$$

$$V_{out}-V_F = 0.0261V = 26.1mV$$

(b)

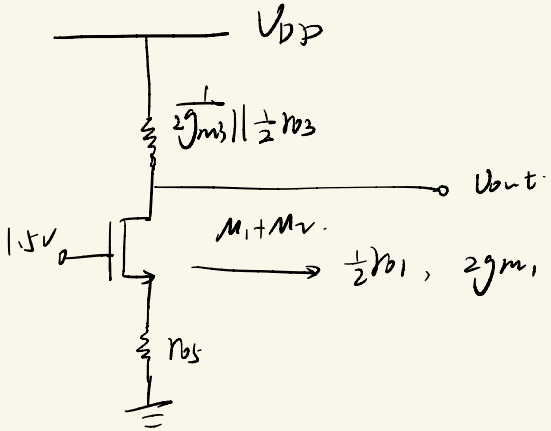

$$A_{cm} = \frac{\Delta V_{out}}{\Delta V_{in,cm}} = -\frac{\frac{1}{2g_{m3}} \| \frac{r_{o3}}{2}}{r_{o5} + \frac{1}{2g_{m1,2}}} \approx -\frac{1}{1+2g_{m1,2} r_{o5}} \frac{g_{m1,2}}{g_{m3,4}}$$

$$A_{dm} = g_{m1,2} \left(r_{o1,2} \| r_{o3,4} \right)$$

$$g_{m3} = \sqrt{2 I_3 \mu_p C_{ox} \frac{W}{L}} = 1.3847\ mS$$

$$r_{o3} = \frac{1}{\lambda_p I_3} = 2 \times 10^4\ \Omega \qquad g_{m1,2} = \sqrt{2 I_1 \mu_n C_{ox} \frac{W}{L}}$$

$$r_{o5} = \frac{1}{\lambda_n I_5} = 2 \times 10^4\ \Omega \qquad = 2.59\ mS$$

$$r_{o1,2} = \frac{1}{\lambda_n I_1} = 4 \times 10^4\ \Omega$$

$$A_{cm} = -\frac{\frac{\frac{r_{o3}}{4 g_{m3}}}{\frac{1}{2g_{m3}} + \frac{1}{2} r_{o3}}}{r_{o5} + \frac{1}{2g_{m1,2}}} = -\frac{\frac{r_{o3}}{1 + r_{o3} g_{m3}}}{2 r_{o5} + \frac{1}{g_{m1,2}}}$$

$$= -0.017595 \quad / \quad -0.01788 \left(-\frac{1}{1+2g_{m1,2}r_{o5}} \quad \frac{g_{m1,2}}{g_{m3,4}} \right)$$

$$A_{dm} = g_{m1,2} \cdot \frac{r_{o12}\, r_{o34}}{r_{o1,2} + r_{o34}} = 34.5\dot{3}$$

$$CMRR = \left| \frac{A_{dm}}{A_{cm}} \right| = 1962.489 \quad / \quad 1931.2$$

（这里由于以近似和非近似计算得出的结果相差较大，所以给出两个结果）