Graph Inductive Bias in Transformers without Message Passing

Jiaqing (Steven) Xie

Supervisor: **Florian Grötschla**

05/03/2024

Part I: Background

- Transformer
- Graph Transformer
- Inductive Bias
- Graph Inductive Bias

Special Graphs

- Path Graph

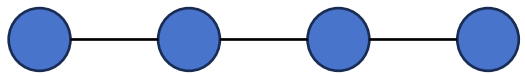

Example:

I am an ETH Student

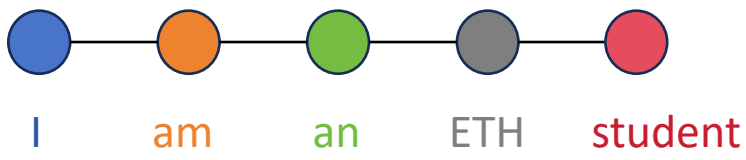

- Grid (Lattice) Graph

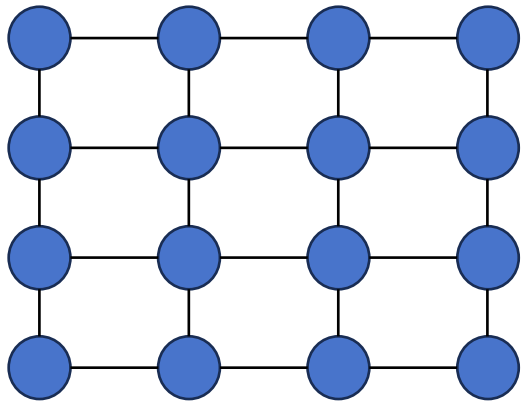

Example:

split image into 9 patches

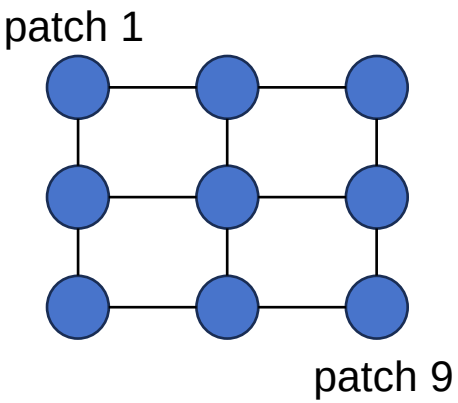

Positional Encoding for Special Graphs

- Path Graph

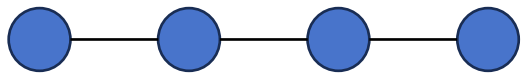

Example:

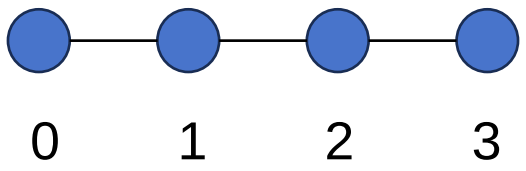

- Grid (Lattice) Graph

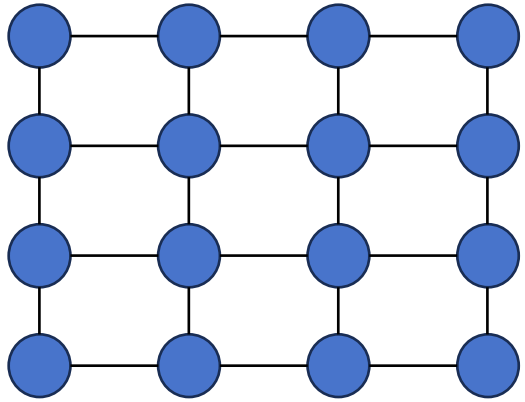

Example:

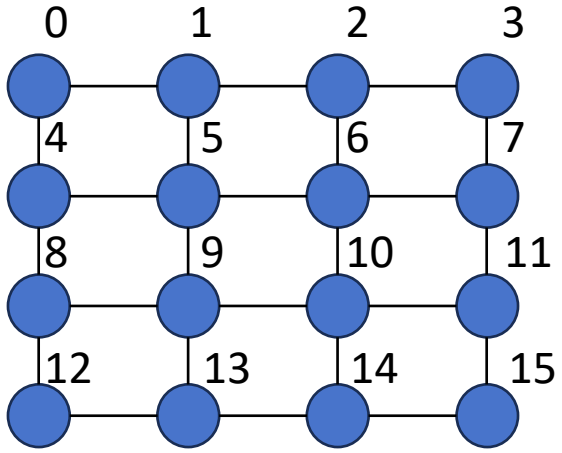

Encoding Scheme: Transformer

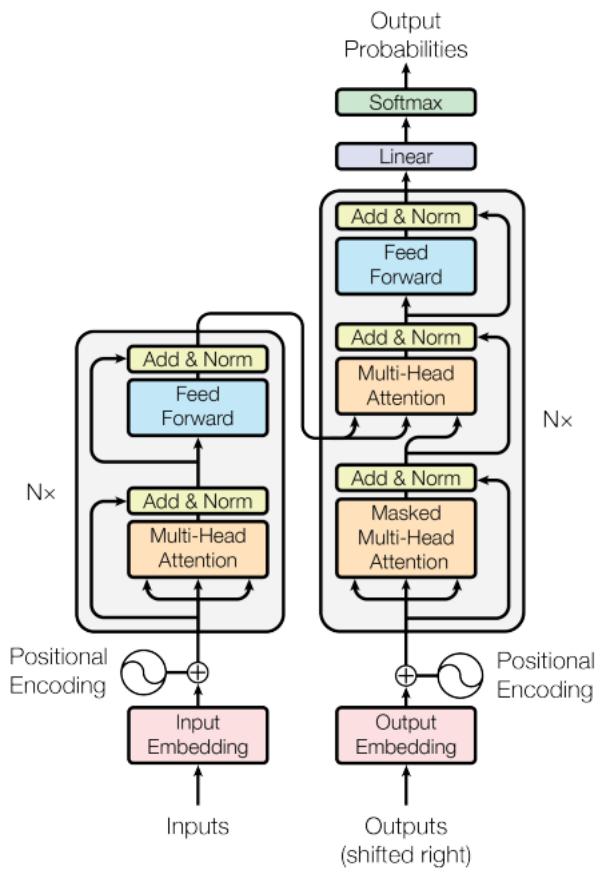

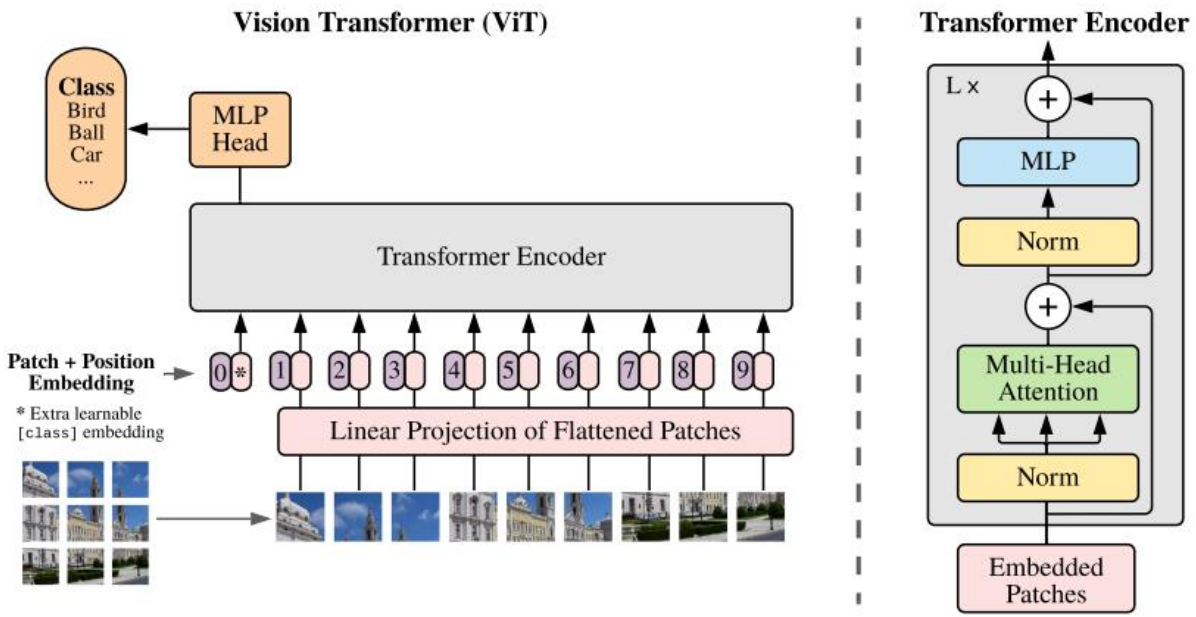

Language Transformer Model (Vaswani 2017 et al.)

Vision Transformer Model (Dosovitskiy 2021 et al.)

Positional Encoding for General Graphs

It is hard to observe positional encodings for general graphs!

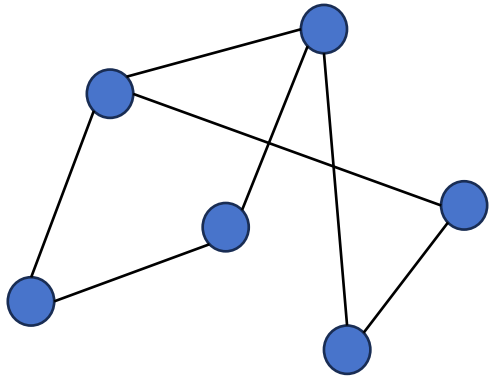

- No natural Coordinate system
- No predefined Ordering
- Need to define Topology-Based encodings

Vanilla Transformer to Graph Transformer

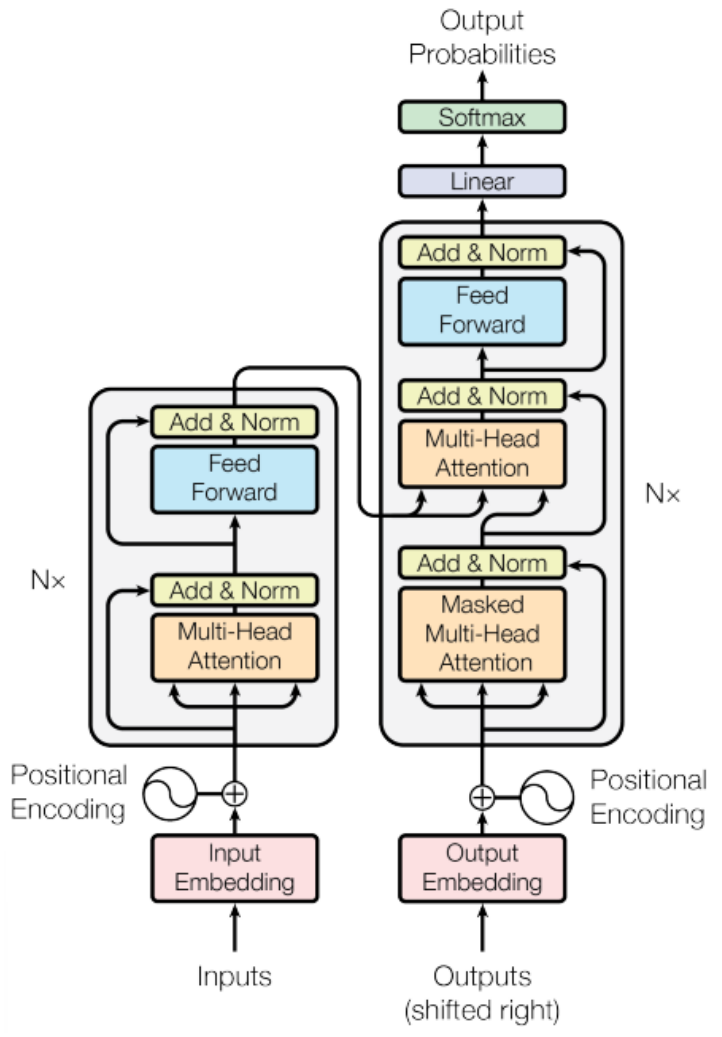

Transformer Model (Vaswani et al. 2017)

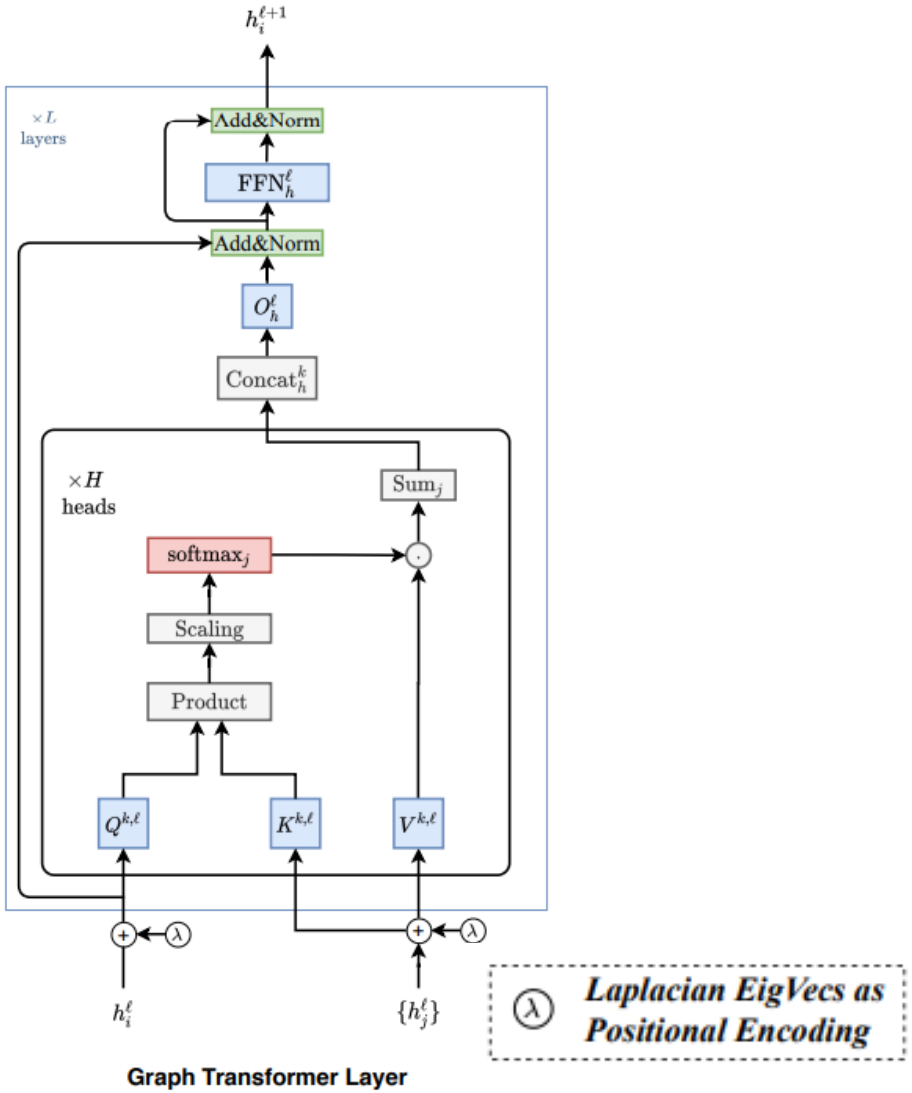

Graph Transformer Model (Dwivedi et al. 2021)

Design Space for Graph Transformers

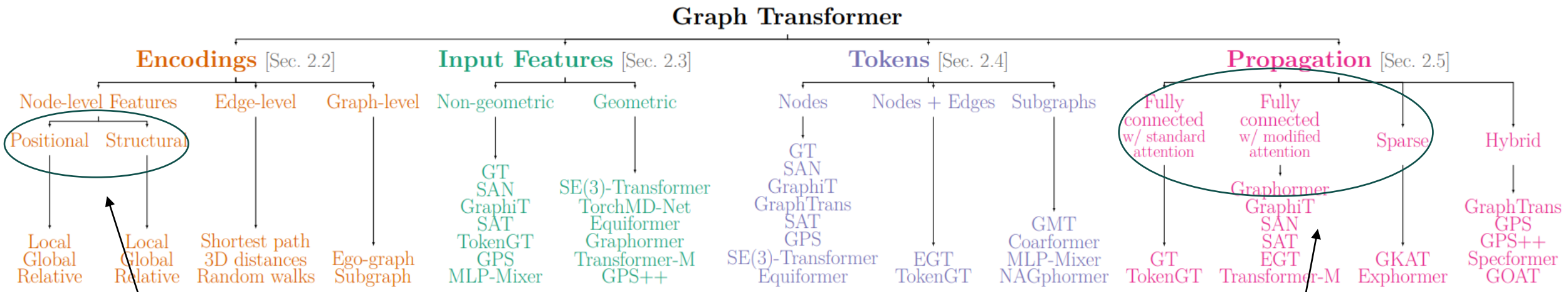

Family of Graph Transformers (Luis et al. 2024)

Positional Encoding

Message Passing / Global Attention

1) Global Attention

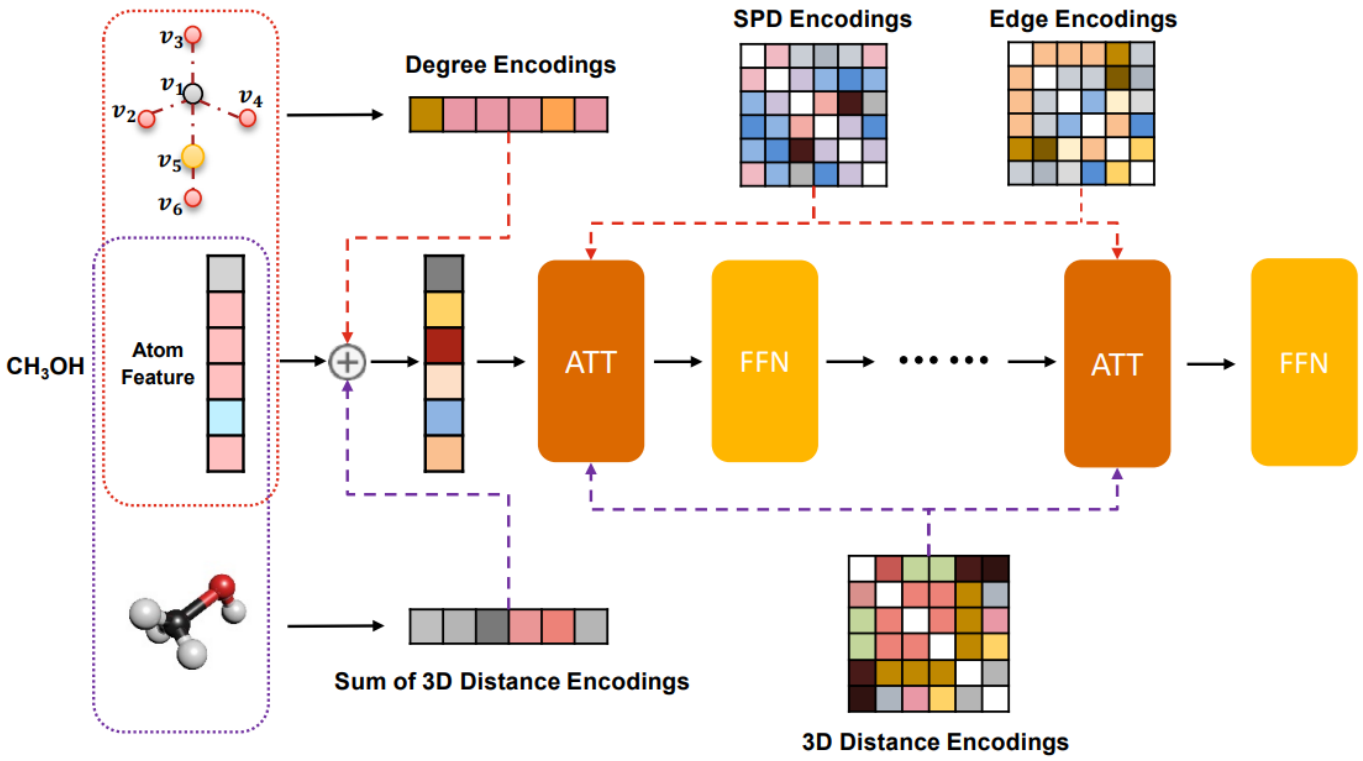

Transformer-M (Luo et al. 2021)

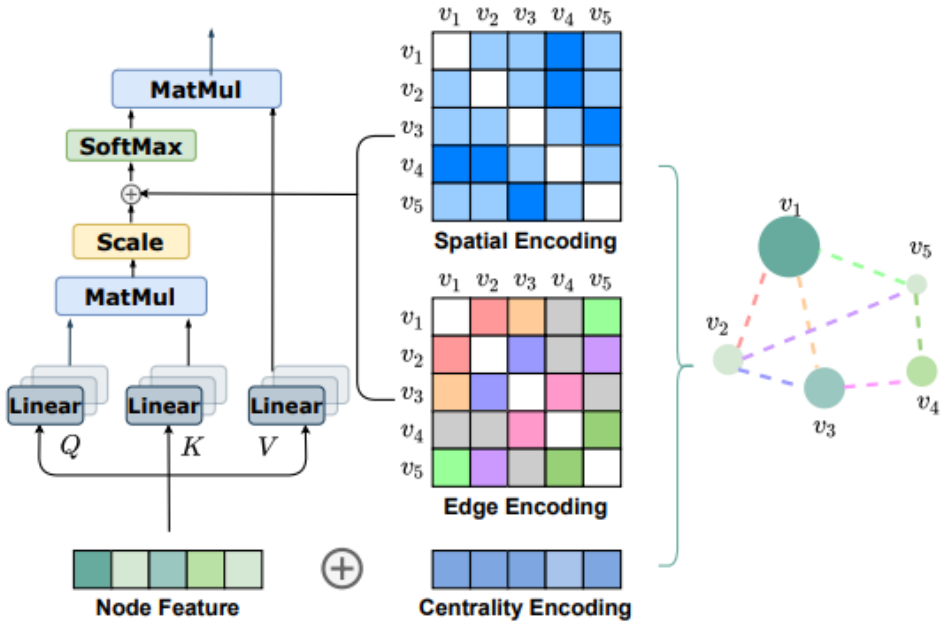

Graphormer (Ying et al. 2021)

Overview: Graph Neural Networks

- Convolutional, Attentional, Message Passing

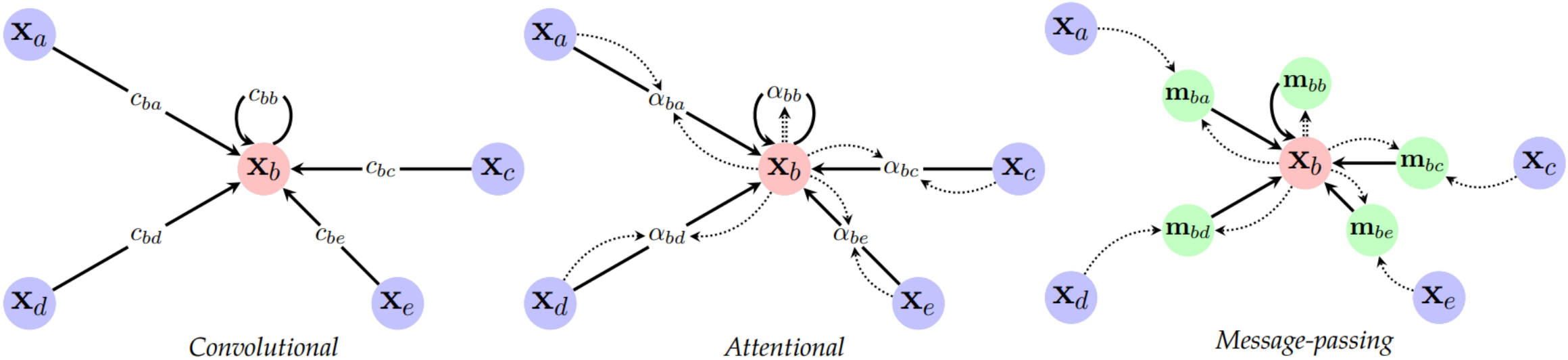

$$\mathbf{h}_u = \phi\left(\mathbf{x}_u, \bigoplus_{v \in \mathcal{N}_u} c_{uv}\psi(\mathbf{x}_v)\right) \qquad \mathbf{h}_u = \phi\left(\mathbf{x}_u, \bigoplus_{v \in \mathcal{N}_u} a(\mathbf{x}_u, \mathbf{x}_v)\psi(\mathbf{x}_v)\right) \qquad \mathbf{h}_u = \phi\left(\mathbf{x}_u, \bigoplus_{v \in \mathcal{N}_u} \psi(\mathbf{x}_u, \mathbf{x}_v)\right)$$

Bronstein et al. 2021

2) Message Passing (MP)

- Message passing is contributed by including edge attributes.

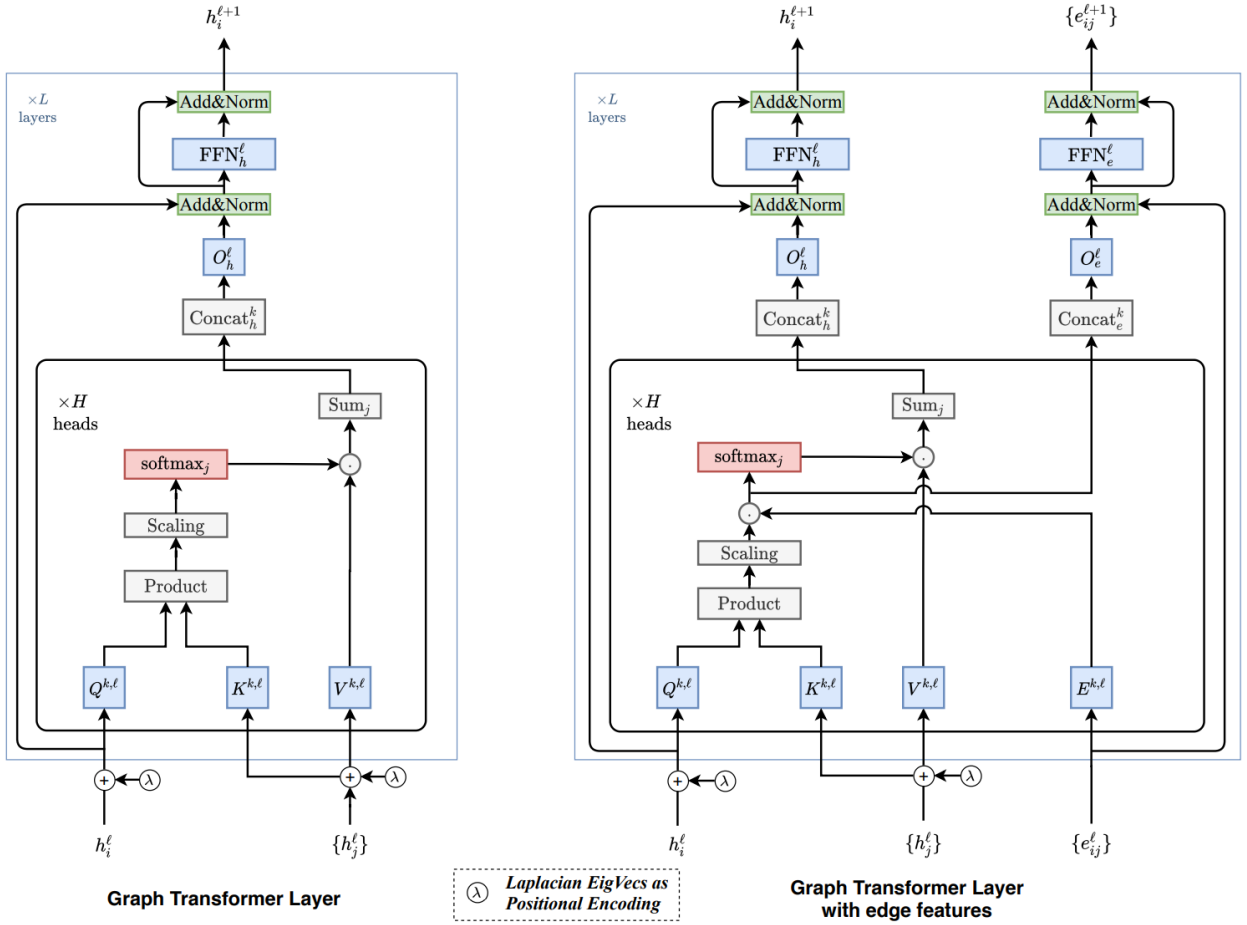

Graph Transformer (Dwivedi et al. 2021)

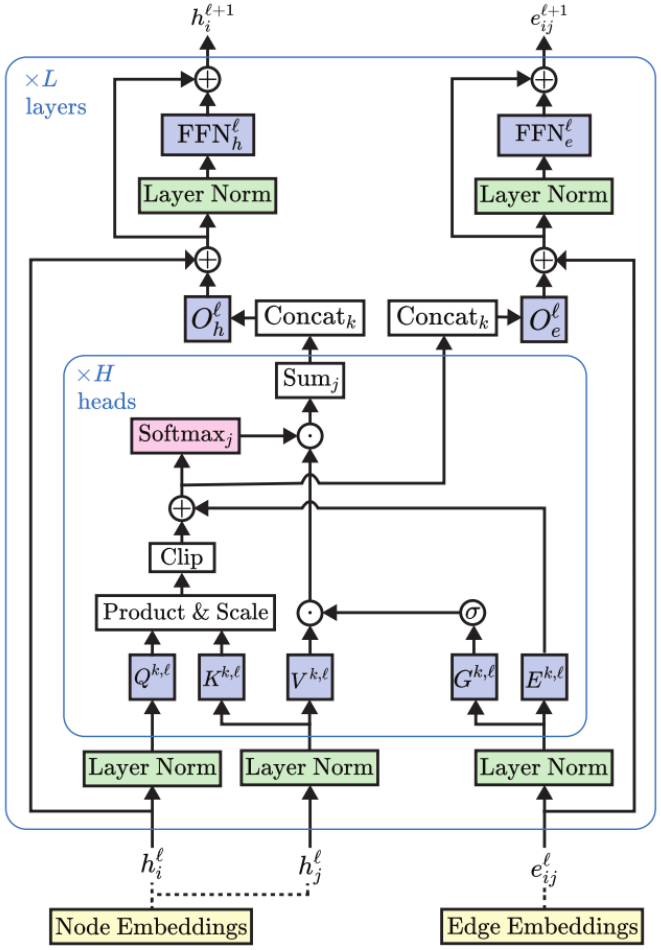

EGT (Hussain et al. 2022)

3) Global Attention & MP

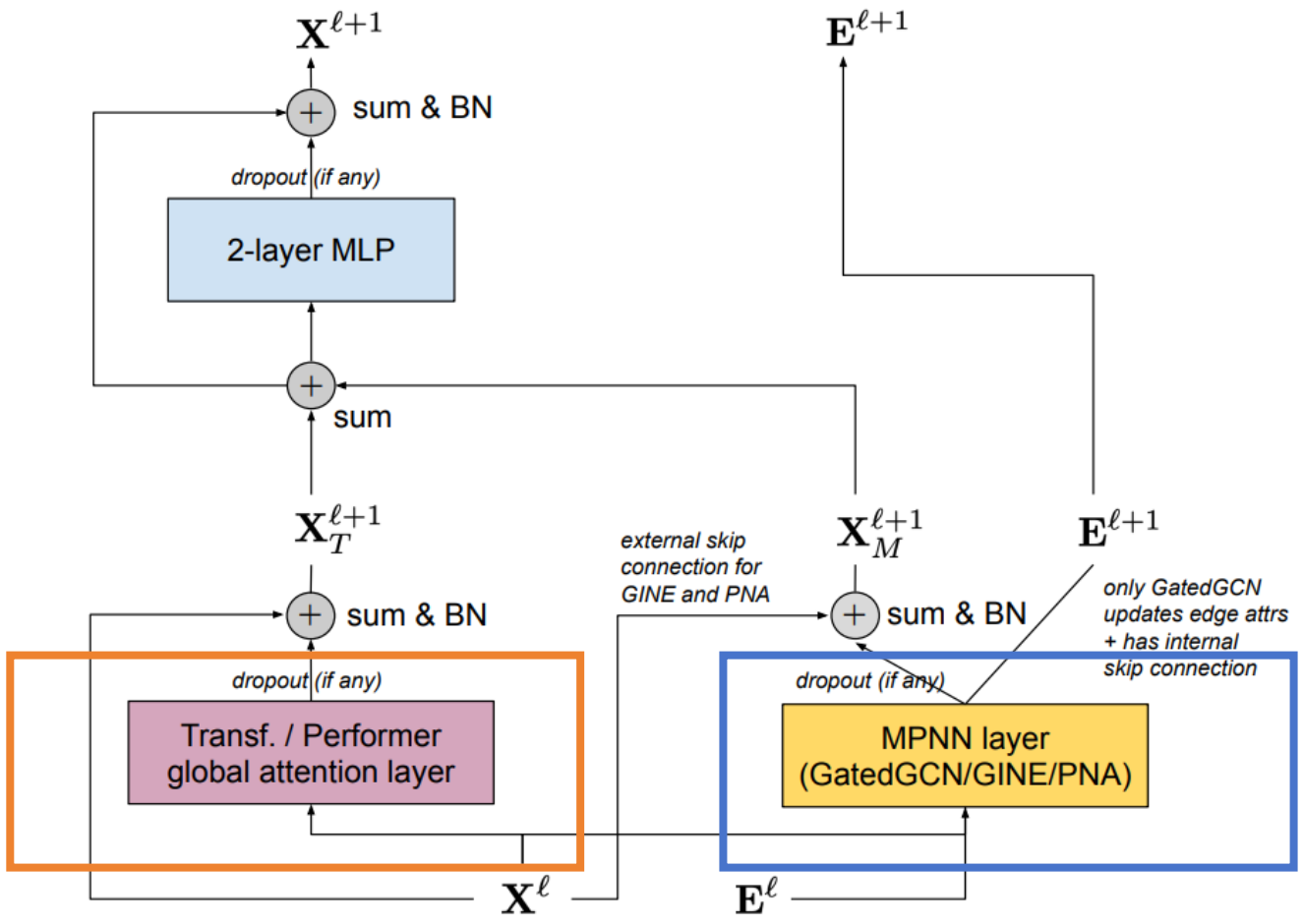

GraphGPS Layer (Rampášek et al. 2022)

4) Positional Encoding

Commonly Used:

- Shortest Path Distance (SPD)
- Laplacian Eigenvectors
- SVD
- Random Walk
- Node2Vec
- …

$$\Delta = \mathbf{I} - D^{-1/2} A D^{-1/2} = U^T \Lambda U$$

$$\mathbf{A} \overset{\text{SVD}}{\approx} \mathbf{U}\Sigma\mathbf{V}^T = (\mathbf{U}\sqrt{\Sigma}) \cdot (\mathbf{V}\sqrt{\Sigma})^T = \hat{\mathbf{U}}\hat{\mathbf{V}}^T$$

$$\boldsymbol{w}_m = \sum_i (\boldsymbol{D}^{-1}\boldsymbol{A})^m$$

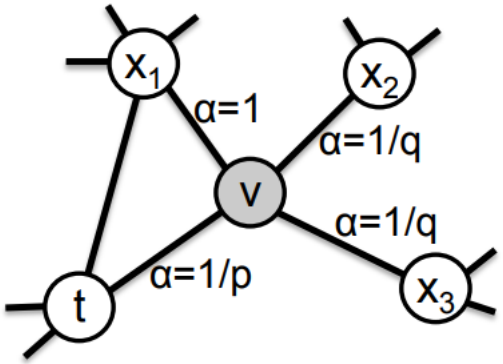

Inductive Bias

- Prior Information / Hypothesis / Inherence
- Examples:
  - Recurrent NN: Sequential Data (Shift invariant)
  - Graph NN: Structured Data (Permutation invariant)
  - Convolution NN: Grid Data (Translation invariant)

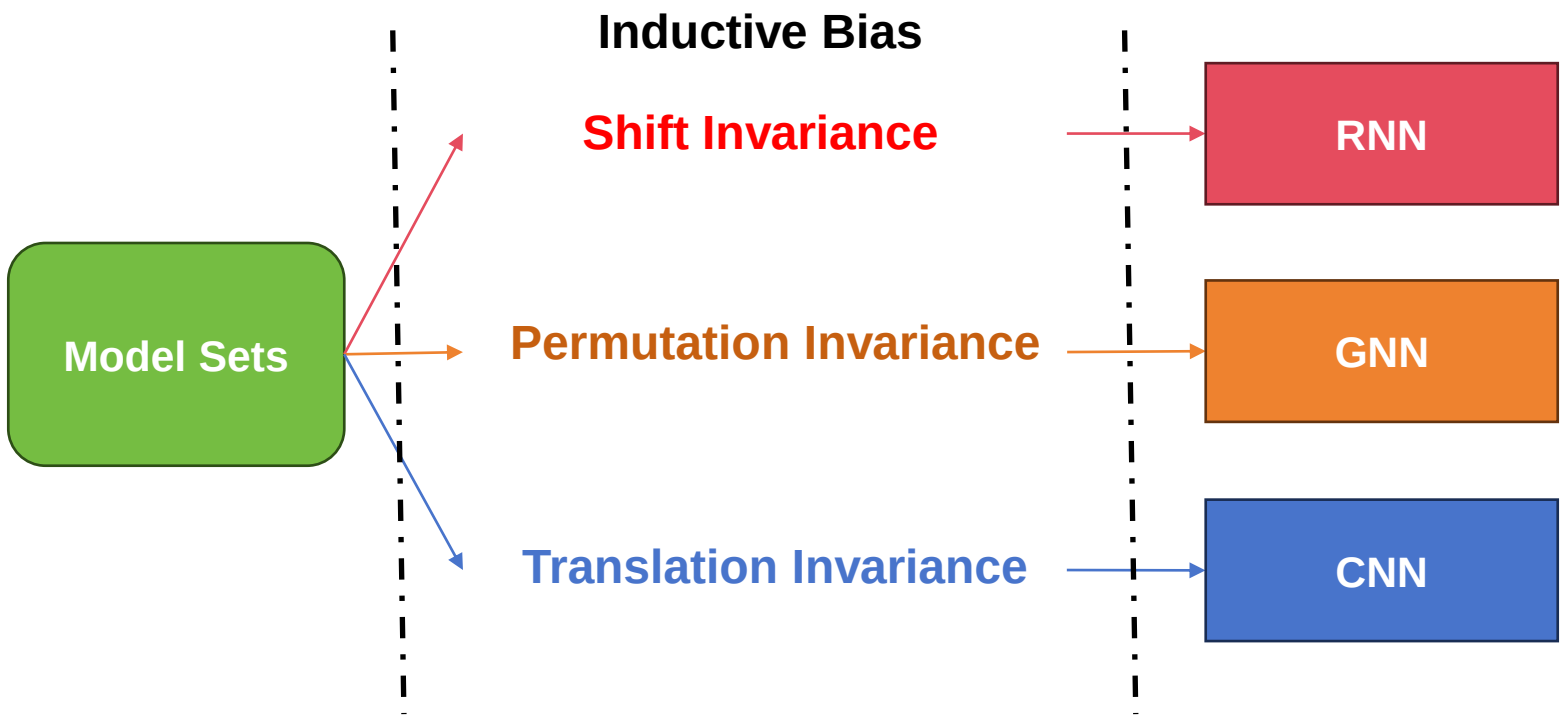

Inductive Bias (CNN vs. Transformer)

- CNNs serves locality while self-attention layers are global

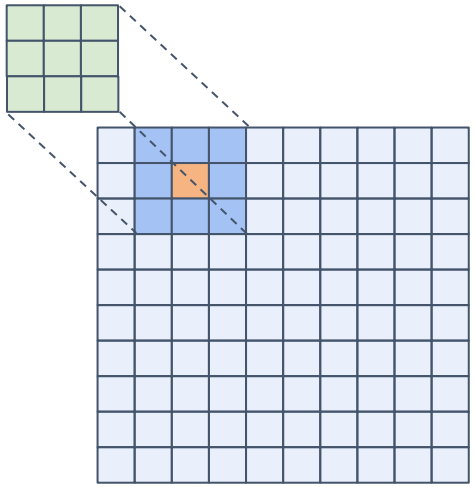

Neighbor information is aggregated by the kernel in CNN.

Locality: ☑

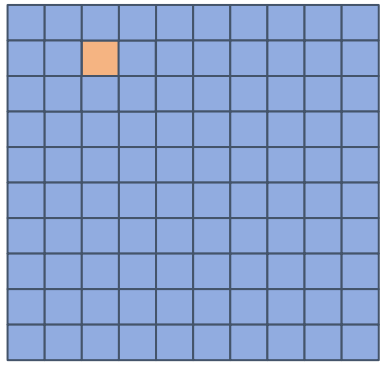

Positions of pixels are unknown for self-attention blocks.

Locality: ☒

Graph Inductive Bias (MPNN vs. Graph Transformer)

- MPNNs serves locality while self-attention layers in GT are global

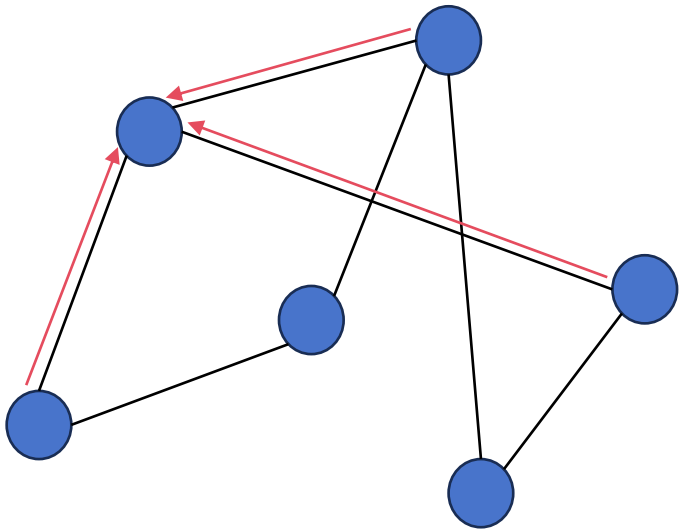

Neighbor nodes' information is aggregated by MPNN

Locality: ☑

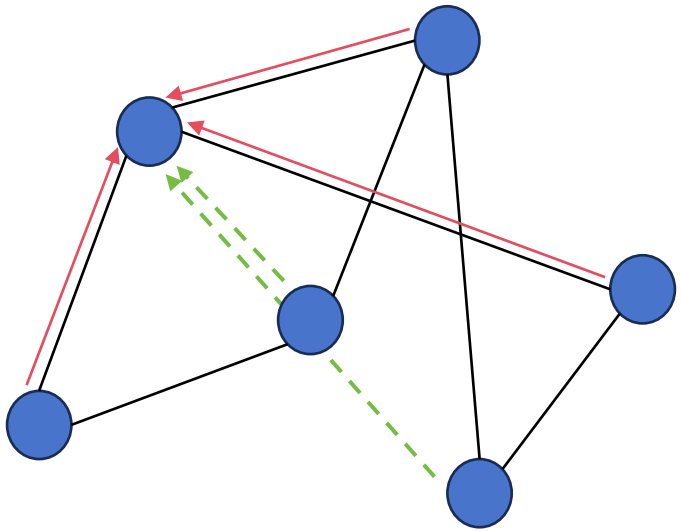

Potential unlinked nodes are supposed to be linked under the settings of graph transformer.

Locality: ☒

Pros and cons of MPNN and GT

Pros

- MPNN focus on local dependencies. It’s more effective where local topology takes matter.
- GT focus on global dependencies. It works well on graph level tasks.

Cons

- MPNN suffers from over-smoothing where all node representations are the same.
- Graph transformers suffers from the missing of graph inductive bias.

Recall Global Attention & MP

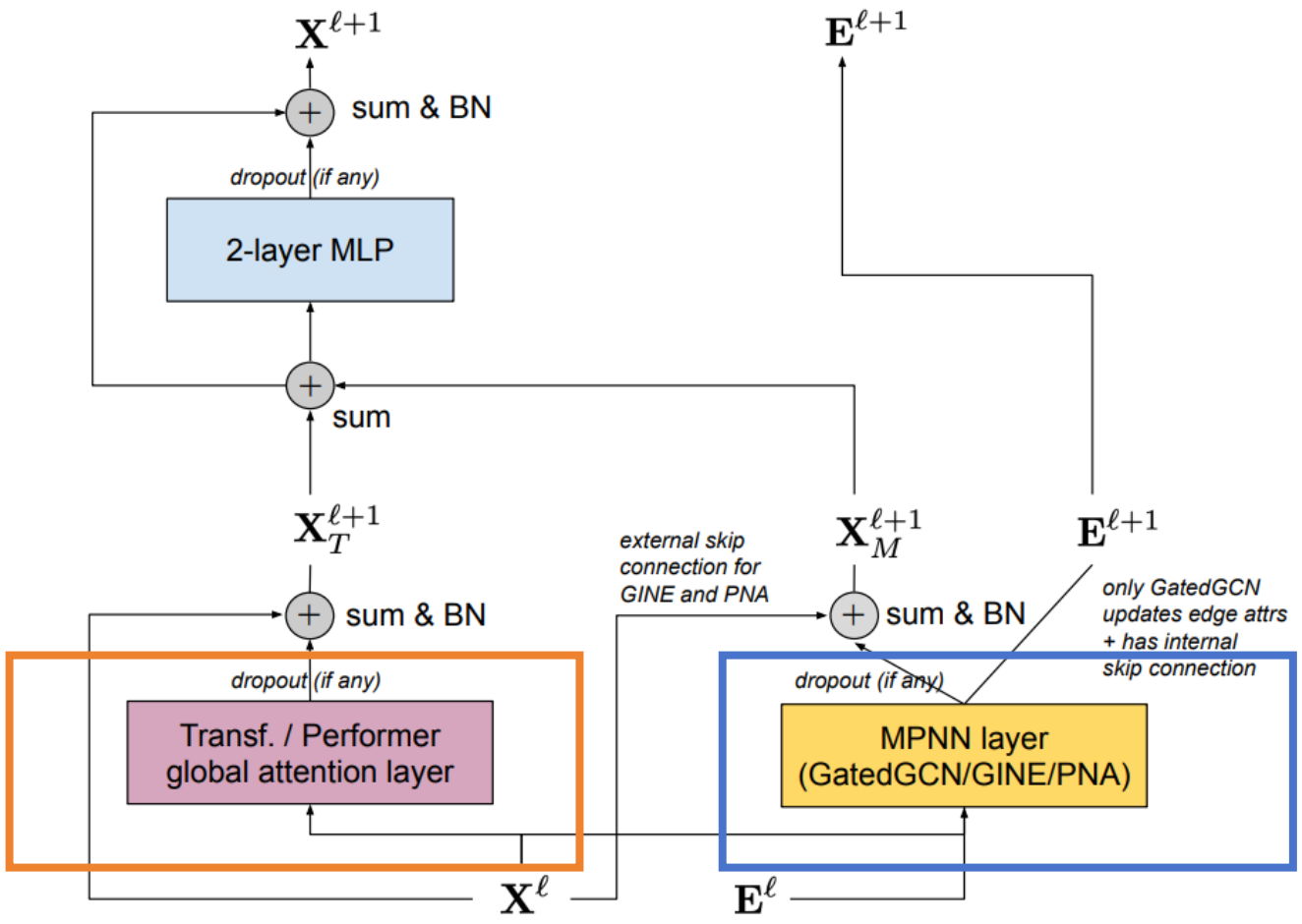

GraphGPS Layer (Rampášek et al. 2022)

Insert MPNN to GT will definitely bring graph inductive bias in GT.

Bad side: new model inherits limitations of MPNN

Graph Inductive Bias Without Message Passing?

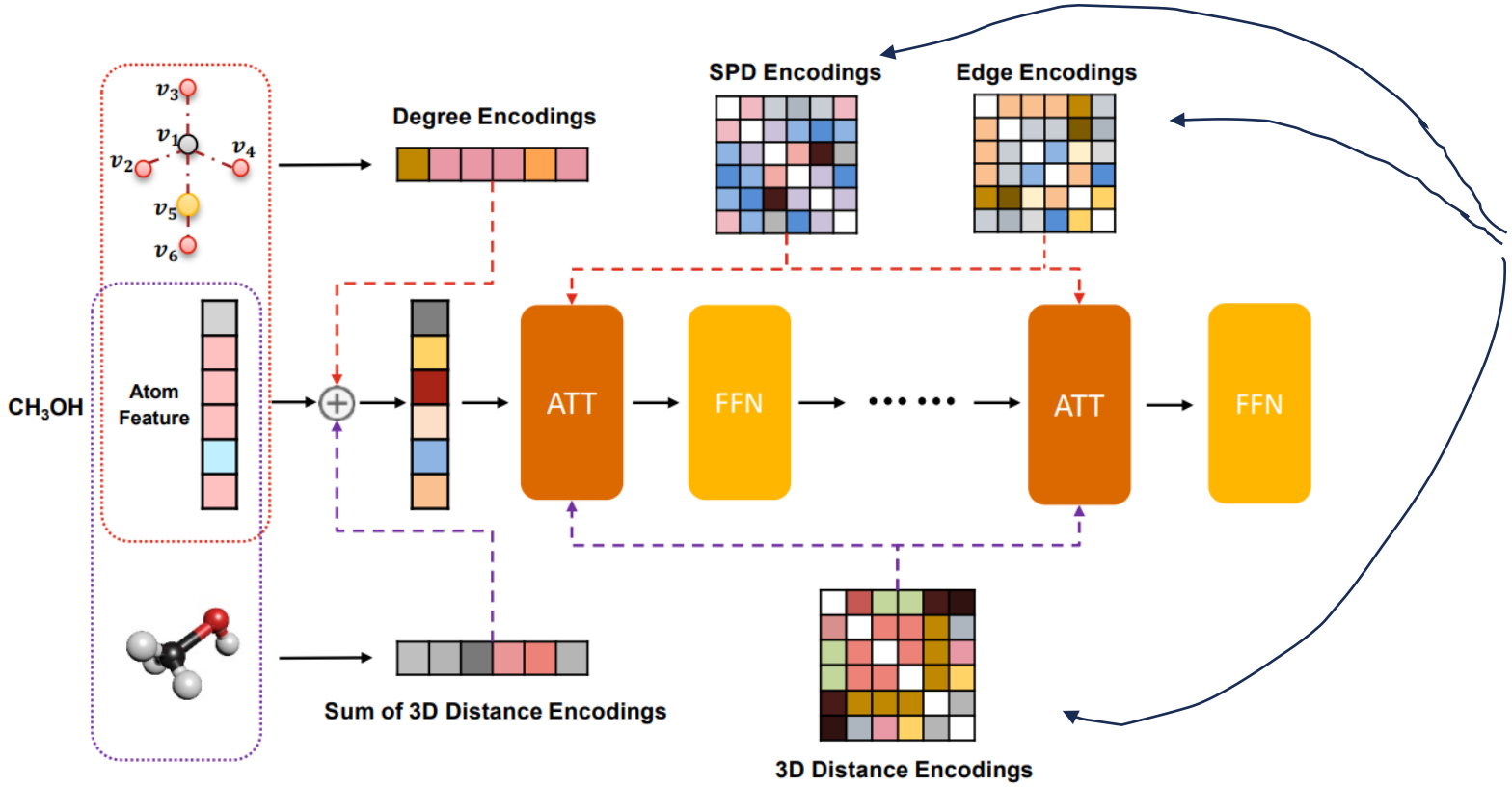

Transformer-M (Luo et al. 2023)

Add positional encodings for each node will bring graph inductive bias

Intuition: Modify positional encodings to make it as expressive as MPNN.

Part II: Model Architecture

- Graph Inductive Bias Transformer: GRIT
  - ☐ Relative Random Walk Probabilities
  - ☐ Flexible Attention
  - ☐ Degree Information Injection
  - ☐ FFN with BN

Overview: GRIT

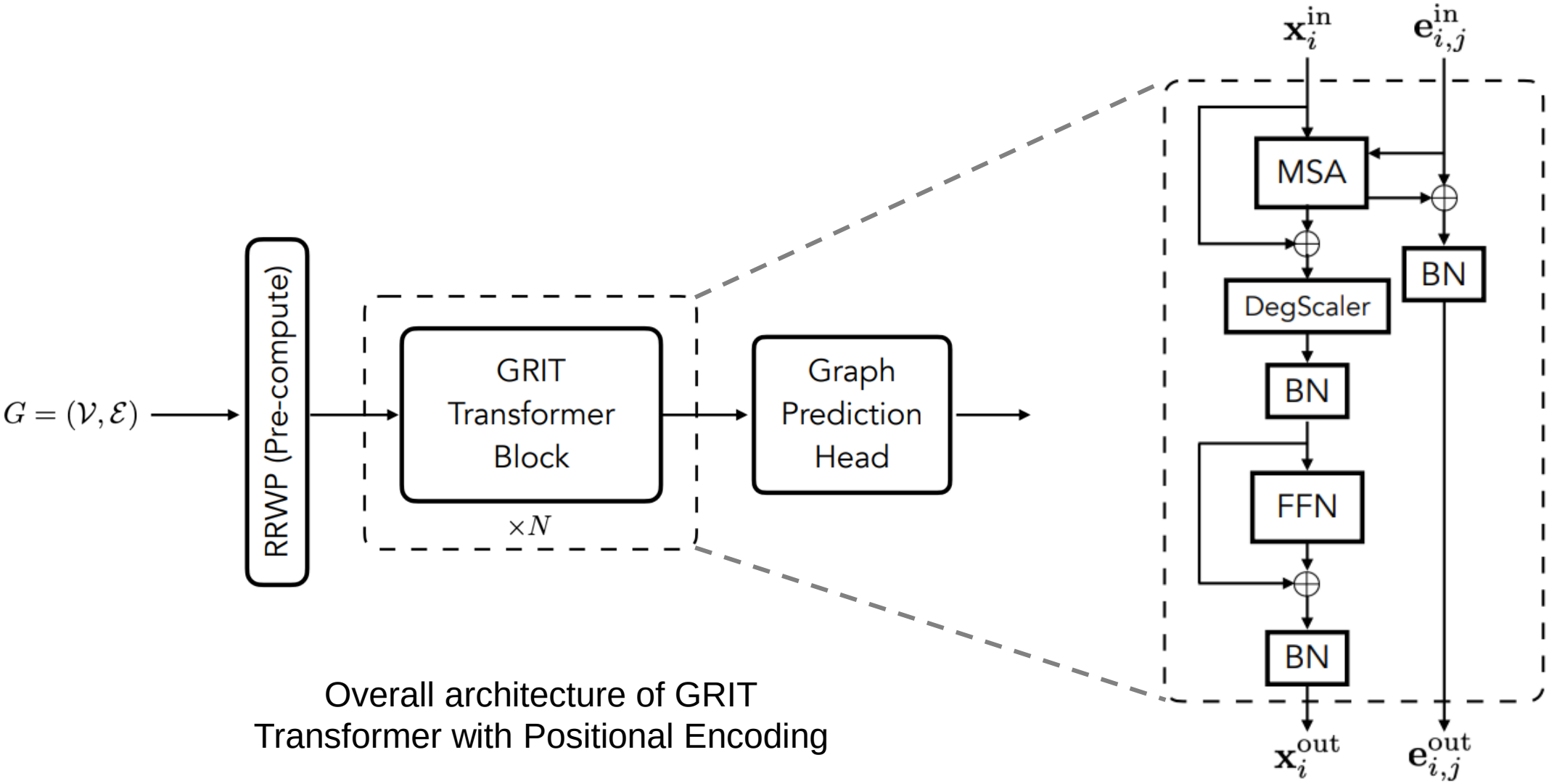

Overall architecture of GRIT Transformer with Positional Encoding

Internal architecture of GRIT

Relative Random Walk Probabilities (RRWP)

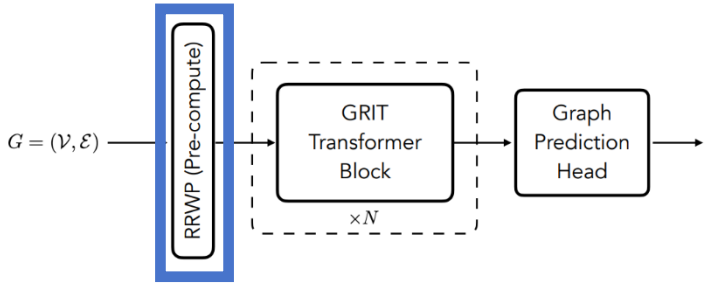

- Define $\boldsymbol{A}$: Adjacency Matrix
- Define $\boldsymbol{D}$: Diagonal Degree Matrix
- Define $\boldsymbol{M} = \boldsymbol{D}^{-1}\boldsymbol{A}$.

Example:

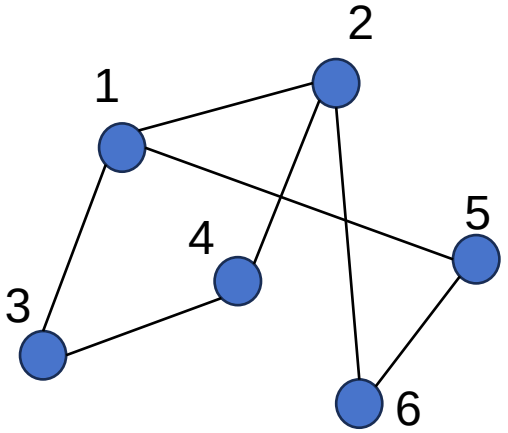

$$\boldsymbol{A} \quad \begin{bmatrix} 0 & 1 & 1 & 0 & 1 & 0 \\ 1 & 0 & 0 & 1 & 0 & 1 \\ 1 & 0 & 0 & 1 & 0 & 0 \\ 0 & 1 & 1 & 0 & 0 & 0 \\ 1 & 0 & 0 & 0 & 0 & 1 \\ 0 & 1 & 0 & 0 & 1 & 0 \end{bmatrix}$$

$$\boldsymbol{D}^{-1} \quad \begin{bmatrix} 1/3 & 0 & 0 & 0 & 0 & 0 \\ 0 & 1/3 & 0 & 0 & 0 & 0 \\ 0 & 0 & 1/2 & 0 & 0 & 0 \\ 0 & 0 & 0 & 1/2 & 0 & 0 \\ 0 & 0 & 0 & 0 & 1/2 & 0 \\ 0 & 0 & 0 & 0 & 0 & 1/2 \end{bmatrix}$$

$$\boldsymbol{D} \quad \begin{bmatrix} 3 & 0 & 0 & 0 & 0 & 0 \\ 0 & 3 & 0 & 0 & 0 & 0 \\ 0 & 0 & 2 & 0 & 0 & 0 \\ 0 & 0 & 0 & 2 & 0 & 0 \\ 0 & 0 & 0 & 0 & 2 & 0 \\ 0 & 0 & 0 & 0 & 0 & 2 \end{bmatrix}$$

$$\boldsymbol{M} \quad \begin{bmatrix} 0 & 0.333 & 0.333 & 0 & 0.333 & 0 \\ 0.333 & 0 & 0 & 0.333 & 0 & 0.333 \\ 0.5 & 0 & 0 & 0.5 & 0 & 0 \\ 0 & 0.5 & 0.5 & 0 & 0 & 0 \\ 0.5 & 0 & 0 & 0 & 0 & 0.5 \\ 0 & 0.5 & 0 & 0 & 0.5 & 0 \end{bmatrix}$$

Relative Random Walk Probabilities (RRWP)

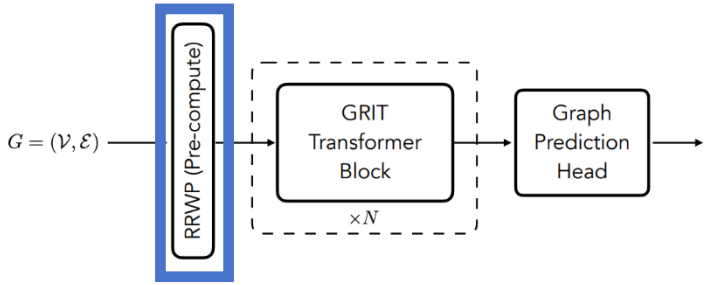

- Define RRWP: $\boldsymbol{P} = [\boldsymbol{I}, \boldsymbol{M}, \boldsymbol{M}^2, \dots, \boldsymbol{M}^K]$

$$\boldsymbol{I} \begin{bmatrix} 1 & 0 & 0 & 0 & 0 & 0 \\ 0 & 1 & 0 & 0 & 0 & 0 \\ 0 & 0 & 1 & 0 & 0 & 0 \\ 0 & 0 & 0 & 1 & 0 & 0 \\ 0 & 0 & 0 & 0 & 1 & 0 \\ 0 & 0 & 0 & 0 & 0 & 1 \end{bmatrix}$$

$$\boldsymbol{M}^3 \begin{bmatrix} 0.00 & 0.43 & 0.29 & 0.00 & 0.29 & 0.00 \\ 0.43 & 0.00 & 0.00 & 0.29 & 0.00 & 0.29 \\ 0.43 & 0.00 & 0.00 & 0.35 & 0.00 & 0.22 \\ 0.00 & 0.43 & 0.35 & 0.00 & 0.22 & 0.00 \\ 0.43 & 0.00 & 0.00 & 0.22 & 0.00 & 0.35 \\ 0.00 & 0.43 & 0.22 & 0.00 & 0.35 & 0.00 \end{bmatrix}$$

Example:

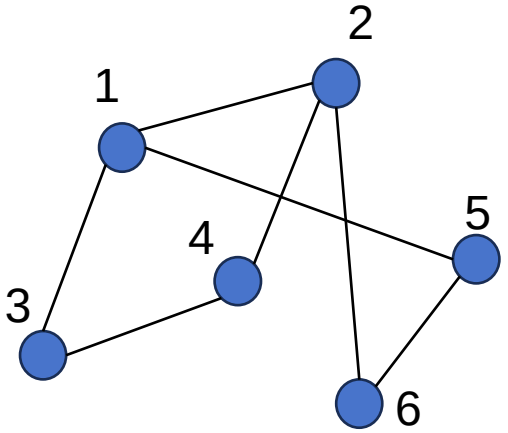

$$\boldsymbol{M} \begin{bmatrix} 0 & 0.333 & 0.333 & 0 & 0.333 & 0 \\ 0.333 & 0 & 0 & 0.333 & 0 & 0.333 \\ 0.5 & 0 & 0 & 0.5 & 0 & 0 \\ 0 & 0.5 & 0.5 & 0 & 0 & 0 \\ 0.5 & 0 & 0 & 0 & 0 & 0.5 \\ 0 & 0.5 & 0 & 0 & 0.5 & 0 \end{bmatrix}$$

$$\boldsymbol{M}^2 \begin{bmatrix} 0.444 & 0 & 0 & 0.278 & 0 & 0.278 \\ 0 & 0.444 & 0.278 & 0 & 0.278 & 0 \\ 0 & 0.417 & 0.417 & 0 & 0.167 & 0 \\ 0.417 & 0 & 0 & 0.417 & 0 & 0.167 \\ 0 & 0.417 & 0.167 & 0 & 0.417 & 0 \\ 0.417 & 0 & 0 & 0.167 & 0 & 0.417 \end{bmatrix}$$

Relative Random Walk Probabilities (RRWP)

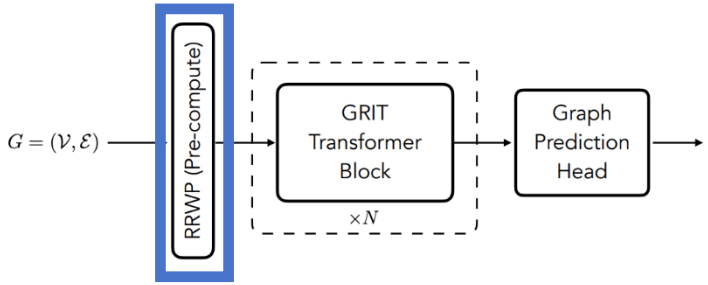

- Define RRWP: $\boldsymbol{P} = [\boldsymbol{I}, \boldsymbol{M}, \boldsymbol{M}^2, \dots, \boldsymbol{M}^K]$

$$\boldsymbol{I} \begin{bmatrix} 1 & 0 & 0 & 0 & 0 & 0 \\ 0 & 1 & 0 & 0 & 0 & 0 \\ 0 & 0 & 1 & 0 & 0 & 0 \\ 0 & 0 & 0 & 1 & 0 & 0 \\ 0 & 0 & 0 & 0 & 1 & 0 \\ 0 & 0 & 0 & 0 & 0 & 1 \end{bmatrix}$$

$$\boldsymbol{M}^3 \begin{bmatrix} 0.00 & 0.43 & 0.29 & 0.00 & 0.29 & 0.00 \\ 0.43 & 0.00 & 0.00 & 0.29 & 0.00 & 0.29 \\ 0.43 & 0.00 & 0.00 & 0.35 & 0.00 & 0.22 \\ 0.00 & 0.43 & 0.35 & 0.00 & 0.22 & 0.00 \\ 0.43 & 0.00 & 0.00 & 0.22 & 0.00 & 0.35 \\ 0.00 & 0.43 & 0.22 & 0.00 & 0.35 & 0.00 \end{bmatrix}$$

Example:

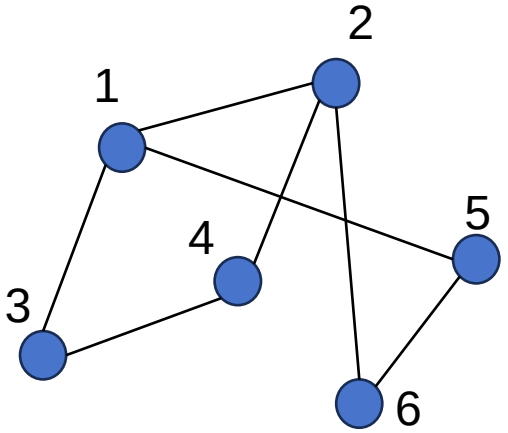

$$\boldsymbol{M} \begin{bmatrix} 0 & 0.333 & 0.333 & 0 & 0.333 & 0 \\ 0.333 & 0 & 0 & 0.333 & 0 & 0.333 \\ 0.5 & 0 & 0 & 0.5 & 0 & 0 \\ 0 & 0.5 & 0.5 & 0 & 0 & 0 \\ 0.5 & 0 & 0 & 0 & 0 & 0.5 \\ 0 & 0.5 & 0 & 0 & 0.5 & 0 \end{bmatrix}$$

$$\boldsymbol{M}^2 \begin{bmatrix} 0.444 & 0 & 0 & 0.278 & 0 & 0.278 \\ 0 & 0.444 & 0.278 & 0 & 0.278 & 0 \\ 0 & 0.417 & 0.417 & 0 & 0.167 & 0 \\ 0.417 & 0 & 0 & 0.417 & 0 & 0.167 \\ 0 & 0.417 & 0.167 & 0 & 0.417 & 0 \\ 0.417 & 0 & 0 & 0.167 & 0 & 0.417 \end{bmatrix}$$

Q: What is $\boldsymbol{P}_{2,3}$ if K = 3?

$$\boldsymbol{P}_{2,3} = [0, 0, 0.278, 0]$$

RRWP + MLP is expressive

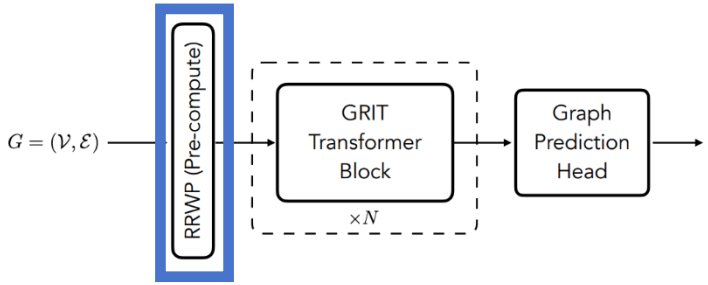

Expressive power for NN:

- The expressive power of a neural network refers to its **ability to approximate complex functions**.

$$(a)\ \ \mathrm{MLP}(\mathbf{P})_{ij} \approx \mathrm{SPD}_{K-1}(i,j)$$

$$(b)\ \ \mathrm{MLP}(\mathbf{P}) \approx \sum_{k=0}^{K-1} \theta_k (\mathbf{D}^{-1}\mathbf{A})^k$$

$$(c)\ \ \mathrm{MLP}(\mathbf{P}) \approx \theta_0 \mathbf{I} + \theta_1 \mathbf{A},$$

- MLP(P) could capture all SPD for nodes up to K - 1 hops away from each other (a)
- MLP(P) could capture mean aggregation: K = 2, $\theta_1 = 1$, other $\theta_i = 0$ (b)
- MLP(P) could capture K-truncated personalized PageRank (PPR) with $\theta_k = \alpha(1 - \alpha)$ for some $\alpha \in (0, 1)$ (b)
- MLP(P) could capture sum aggregation: $\theta_0 = 0$, $\theta_1 = 1$ (c)

RRWP is more expressive than SPD

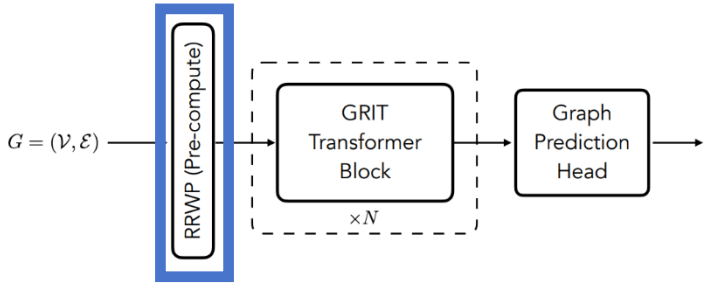

- No isomorphism between Dodecahedron graph and Desargues graph (WL-test)

$$c^{(k+1)}(v) = \text{HASH}\left(c^{(k)}(v), \left\{c^{(k)}(v)\right\}_{u \in N(v)}\right)$$

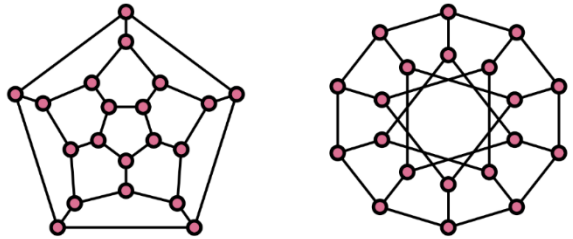

- Define a new metric: Generalized Distance WL (GD-WL) tests to include distance (positional encodings)

$$\chi_G^t(v) = \text{hash}(\{\!\{(d_G(v,u), \chi_G^{t-1}(u)) : u \in \mathcal{V}\}\!\})$$

- GD-WL tests could not tell isomorphism when using SPD as positional encoding since both the Dodecahedron and the Desargues graph have 20 vertices and the same k-hop-neighbor array (3, 6, 6, 3, 1)
- GD-WL tests could tell isomorphism when using RRWP as positional encoding

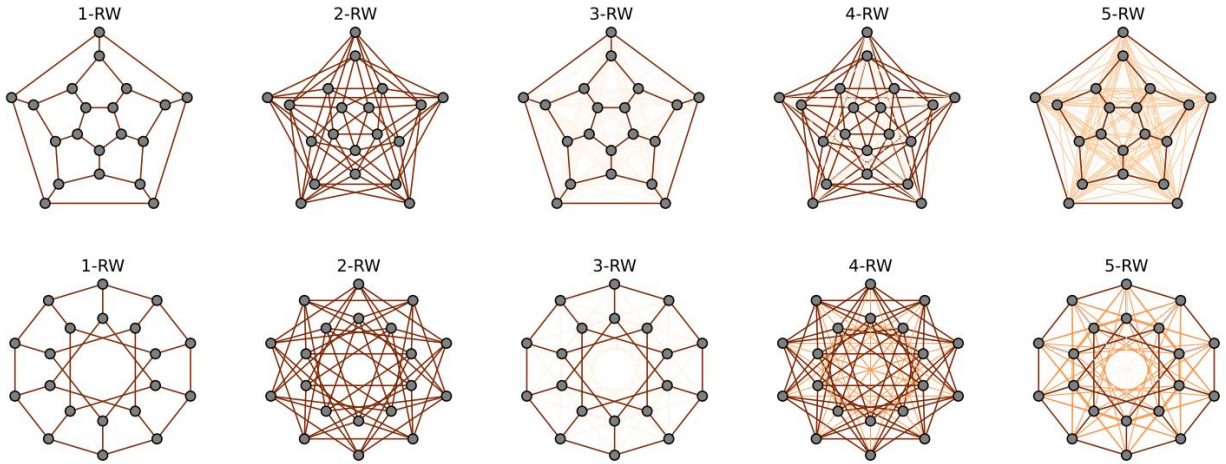

Recall: GRIT

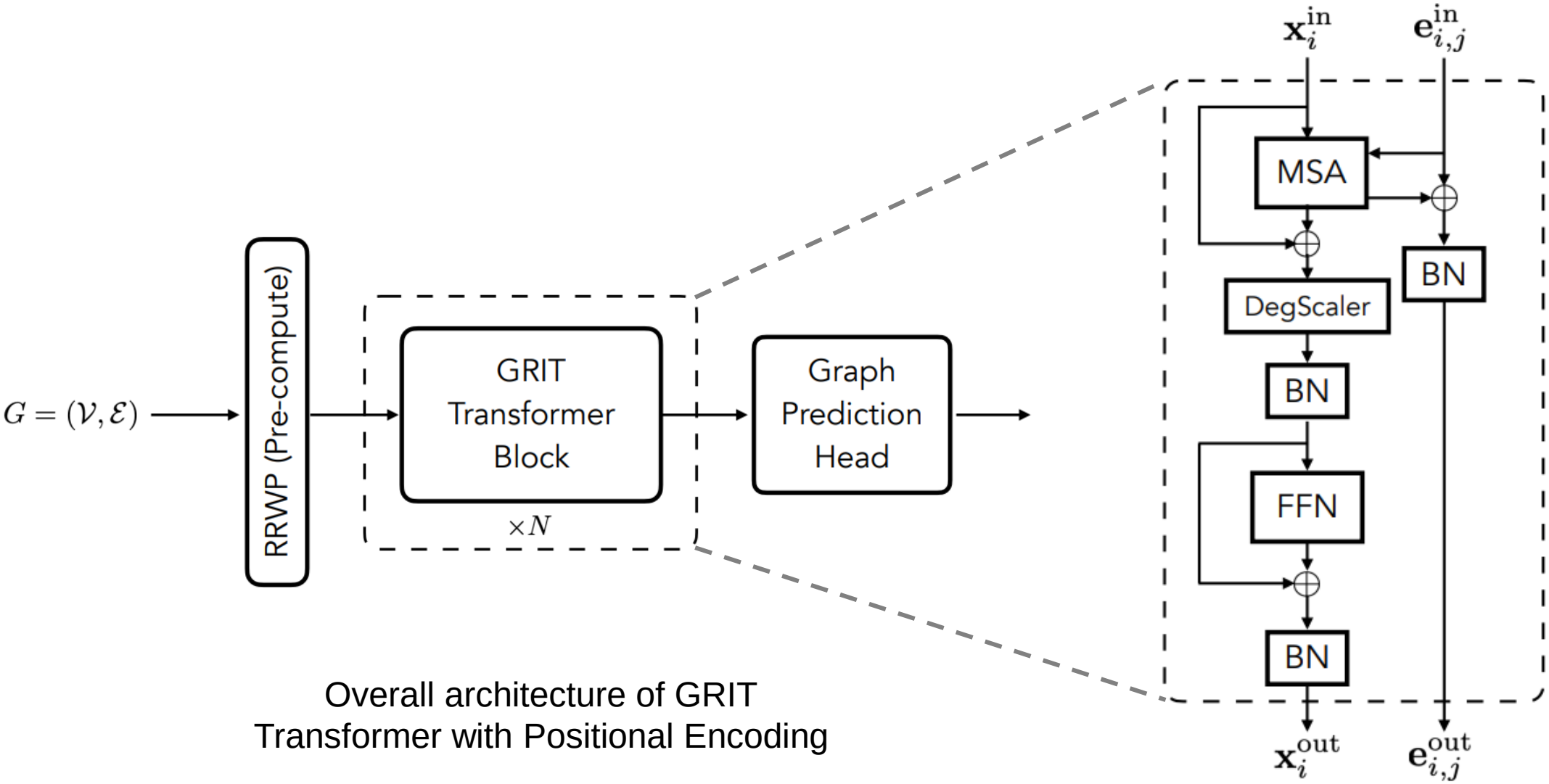

Overall architecture of GRIT
Transformer with Positional Encoding

Internal architecture of GRIT

Flexible Attention

Initialization

$$\mathbf{x}_i = [\mathbf{x}'_i \| \mathbf{P}_{i,i}] \in \mathbb{R}^{d_h+K}$$
$$\mathbf{e}_{i,j} = [\mathbf{e}'_{i,j} \| \mathbf{P}_{i,j}] \in \mathbb{R}^{d_e+K}$$

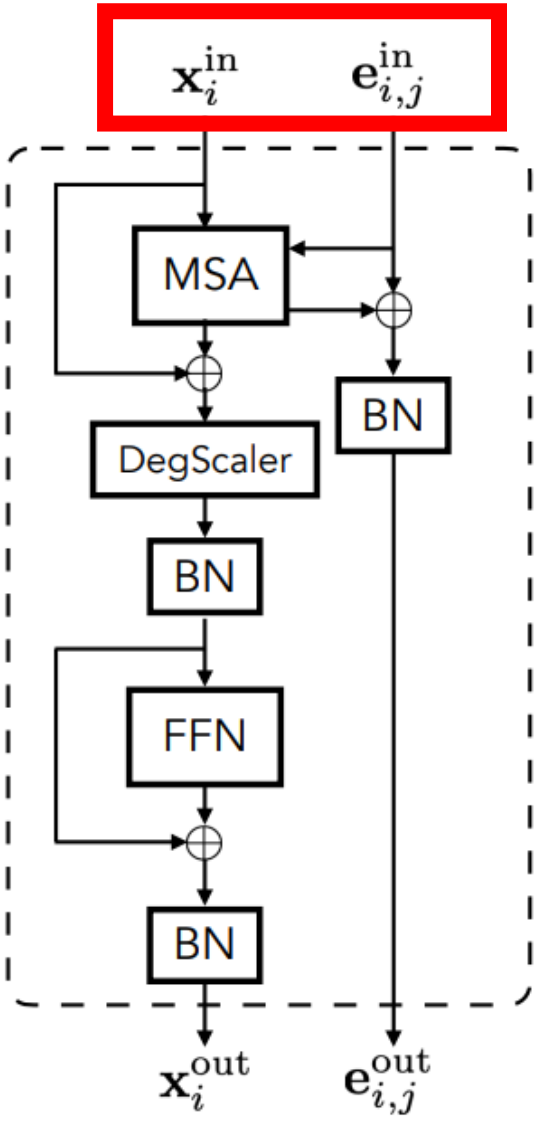

Flexible Attention

Initialization

$$\mathbf{x}_i = [\mathbf{x}'_i \| \mathbf{P}_{i,i}] \in \mathbb{R}^{d_h+K}$$
$$\mathbf{e}_{i,j} = [\mathbf{e}'_{i,j} \| \mathbf{P}_{i,j}] \in \mathbb{R}^{d_e+K}$$

Attention Computation:

$$\hat{\mathbf{e}}_{i,j} = \sigma\Big(\rho\left((\mathbf{W}_{\mathrm{Q}}\mathbf{x}_i + \mathbf{W}_{\mathrm{K}}\mathbf{x}_j) \odot \mathbf{W}_{\mathrm{Ew}}\mathbf{e}_{i,j}\right) + \mathbf{W}_{\mathrm{Eb}}\mathbf{e}_{i,j}\Big) \in \mathbb{R}^{d'}$$

$$\alpha_{ij} = \mathrm{Softmax}_{j\in\mathcal{V}}(\mathbf{W}_{\mathrm{A}}\hat{\mathbf{e}}_{i,j}) \in \mathbb{R},$$

$$\hat{\mathbf{x}}_i = \sum_{j\in\mathcal{V}} \alpha_{ij} \cdot (\mathbf{W}_{\mathrm{V}}\mathbf{x}_j + \mathbf{W}_{\mathrm{Ev}}\hat{\mathbf{e}}_{i,j}) \in \mathbb{R}^d,$$

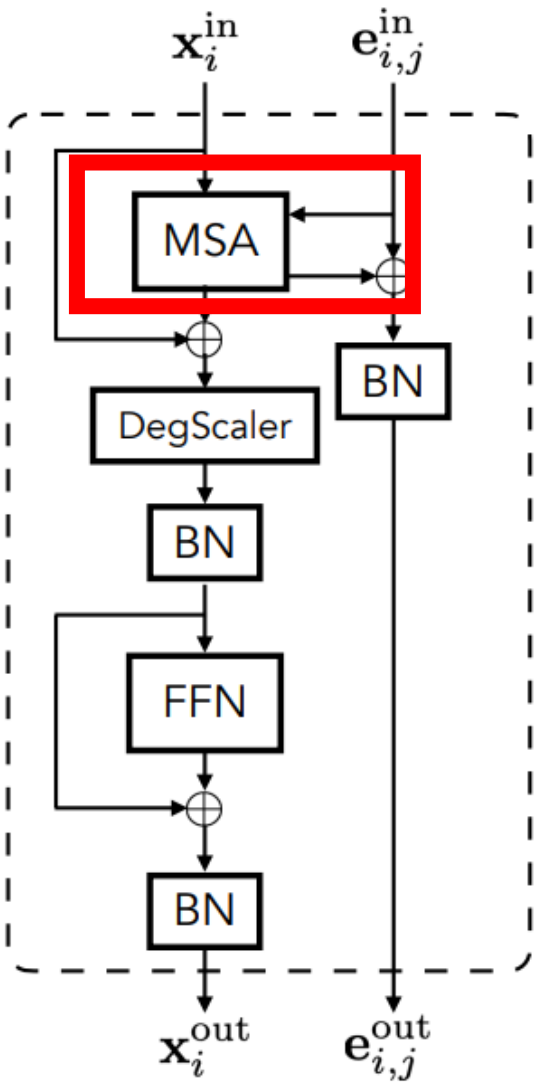

Flexible Attention

Initialization

$$\mathbf{x}_i = [\mathbf{x}'_i \| \mathbf{P}_{i,i}] \in \mathbb{R}^{d_h+K}$$
$$\mathbf{e}_{i,j} = [\mathbf{e}'_{i,j} \| \mathbf{P}_{i,j}] \in \mathbb{R}^{d_e+K}$$

Attention Computation:

$$\hat{\mathbf{e}}_{i,j} = \sigma\Big(\rho\left((\mathbf{W}_{\mathrm{Q}}\mathbf{x}_i + \mathbf{W}_{\mathrm{K}}\mathbf{x}_j) \odot \mathbf{W}_{\mathrm{Ew}}\mathbf{e}_{i,j}\right) + \mathbf{W}_{\mathrm{Eb}}\mathbf{e}_{i,j}\Big) \in \mathbb{R}^{d'}$$

$$\alpha_{ij} = \mathrm{Softmax}_{j\in\mathcal{V}}(\mathbf{W}_{\mathrm{A}}\hat{\mathbf{e}}_{i,j}) \in \mathbb{R},$$
$$\hat{\mathbf{x}}_i = \sum_{j\in\mathcal{V}} \alpha_{ij} \cdot (\mathbf{W}_{\mathrm{V}}\mathbf{x}_j + \mathbf{W}_{\mathrm{Ev}}\hat{\mathbf{e}}_{i,j}) \in \mathbb{R}^d,$$

Multi-head Attention:

$$\mathbf{x}_i^{\mathrm{out}} = \sum_{h=1}^{N_h} \mathbf{W}_{\mathrm{O}}^h \hat{\mathbf{x}}_i^h \in \mathbb{R}^d$$
$$\mathbf{e}_{ij}^{\mathrm{out}} = \sum_{h=1}^{N_h} \mathbf{W}_{\mathrm{Eo}}^h \hat{\mathbf{e}}_{ij}^h \in \mathbb{R}^d$$

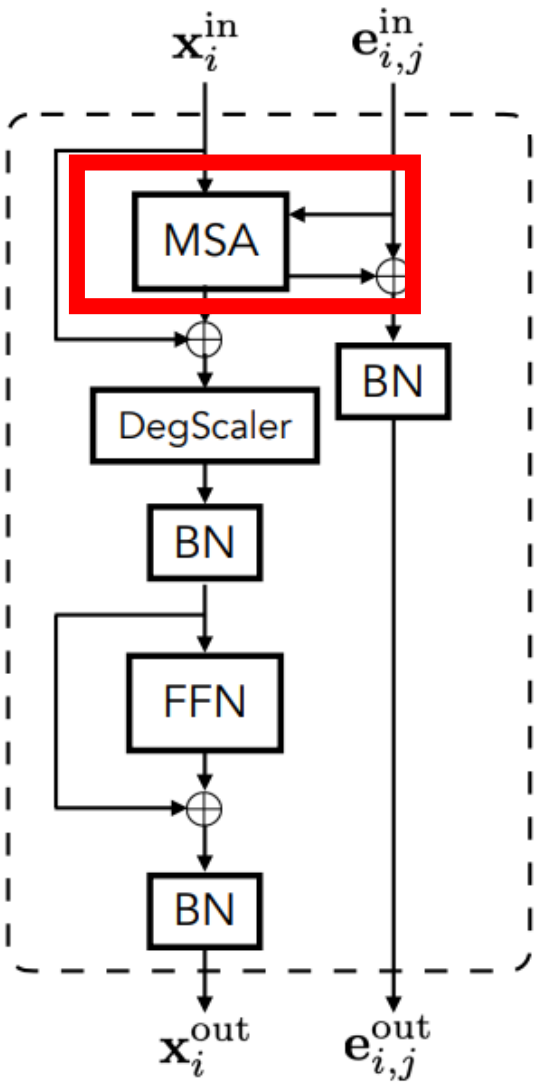

Injecting Degree Information

- Degree information injection:

$$\mathbf{x}_i^{\text{out}'} := \mathbf{x}_i^{\text{out}} \odot \boldsymbol{\theta}_1 + \left(\log(1+d_i) \cdot \mathbf{x}_i^{\text{out}} \odot \boldsymbol{\theta}_2\right) \in \mathbb{R}^d$$

- Why we need degree scaler?
  - ➢ Attention is innately invariant to node degrees (mean-aggr in GNN)
  - ➢ Attention reduces expressive power
  - ➢ Adding degree information will introduce inductive bias

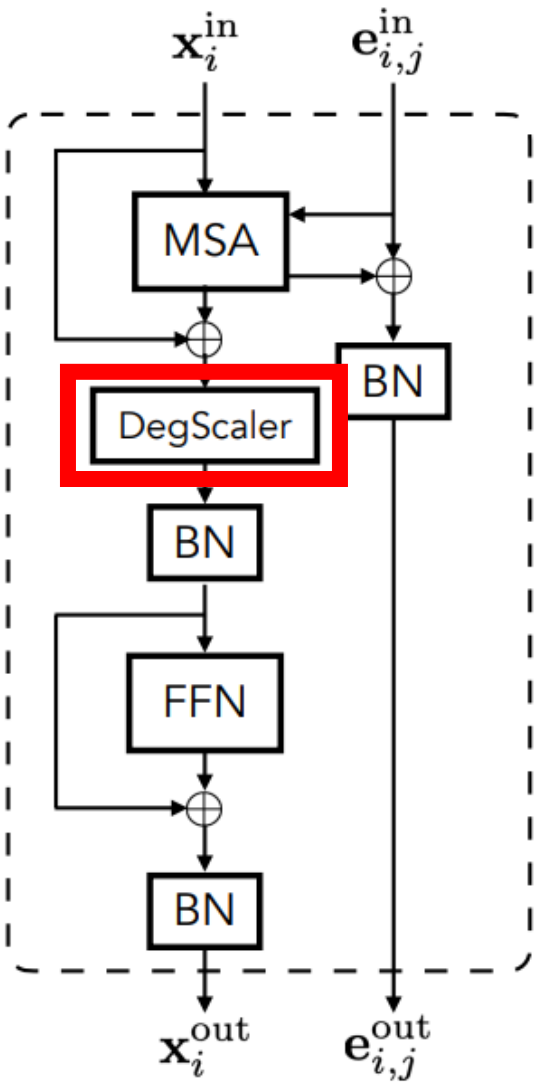

Injecting Degree Information

- Degree information injection:

$$\mathbf{x}_i^{\text{out}'} := \mathbf{x}_i^{\text{out}} \odot \boldsymbol{\theta}_1 + \left(\log(1+d_i) \cdot \mathbf{x}_i^{\text{out}} \odot \boldsymbol{\theta}_2\right) \in \mathbb{R}^d$$

- Why we need degree scaler?
  - ➢ Attention is innately invariant to node degrees (mean-aggr in GNN)
  - ➢ Attention reduces expressive power
  - ➢ Adding degree information will introduce inductive bias

- BatchNorm is favored over LayerNorm
  - ➢ LayerNorm would cancel out the effect brought by degree scaler.

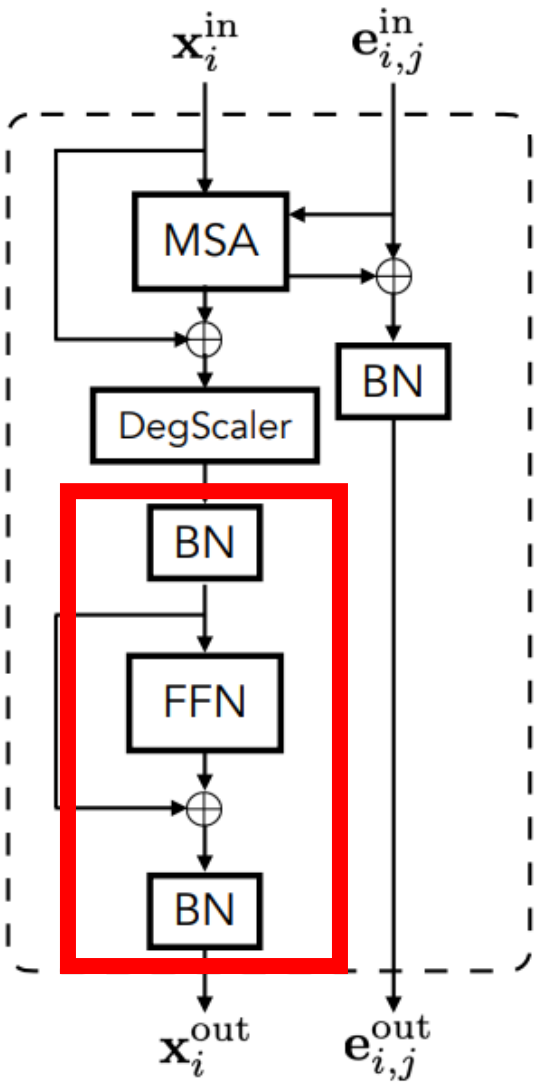

Part III: Experiments

- Baselines

- Benchmarks
  - Common Benchmark to test GT(s)
  - Long Range Graph Benchmark
  - ZINC-FULL
  - Large Scale Graph Dataset: PCQM4Mv2

- Ablations

- Synthetic Datasets

Baselines

- SOTA GT: GraphGPS
- Other Graph Transformers:
  - SAN, Graphormer, K-Subgraph SAT, EGT, Graphormer-URPE, Graphormer-GD
- SOTA GNN:
  - CIN, CRaW1, GIN-AK+
- Other GNNs:
  - GIN, GAT, GatedGCN, GatedGCN-LSPE, PNA, DGN, GSN

Overview of Benchmarks

Task type:

- PATTERN, CLUSTER: node classification (inductive)
- Others: graph classification / graph regression

Dataset	# Graphs	Avg. # nodes	Avg. # edges
ZINC(-full)	12,000 (250,000)	23.2	24.9
MNIST	70,000	70.6	564.5
CIFAR10	60,000	117.6	941.1
PATTERN	14,000	118.9	3,039.3
CLUSTER	12,000	117.2	2,150.9
Peptides-func	15,535	150.9	307.3
Peptides-struct	15,535	150.9	307.3
PCQM4Mv2	3,746,620	14.1	14.6

Common Benchmarks for GT(s)

- ZINC: molecule dataset
- MNIST, CIFAR10: image classification datasets
- PATTEN, CLUSTER: synthetic datasets sampled from Stochastic Block Model

MNIST superpixels dataset from the "Geometric Deep Learning on Graphs and Manifolds Using Mixture Model CNNs" paper, containing 70,000 graphs with 75 nodes each. Every graph is labeled by one of 10 classes.

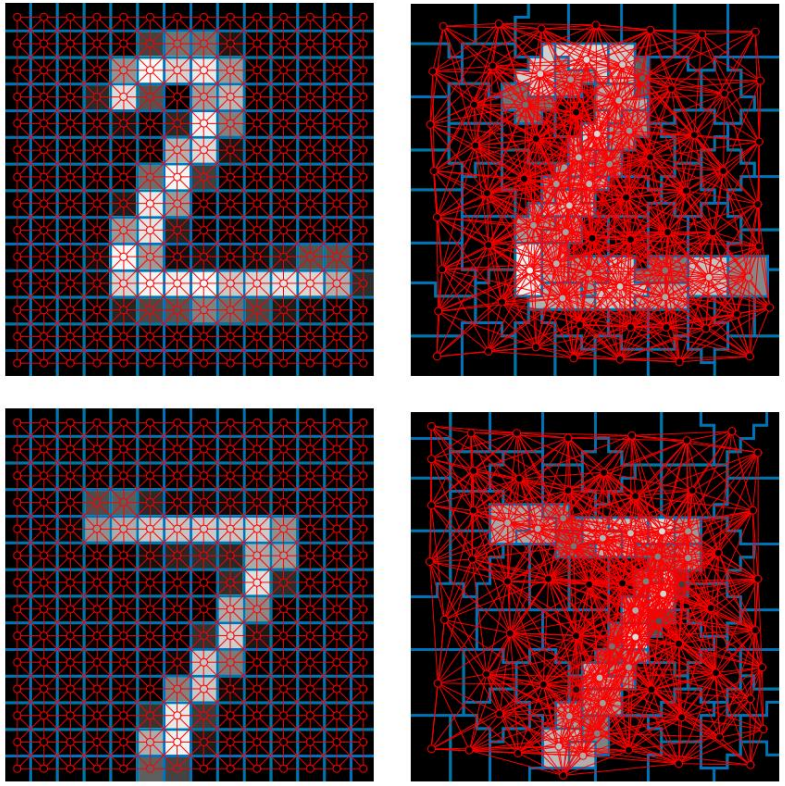

Regular grid Superpixels

Common Benchmarks for GT(s)

- GRIT has on average better or on par performance when it is compared with GraphGPS
- GRIT has overwhelming advantages when it is compared with GNNs

Model	ZINC	MNIST	CIFAR10	PATTERN	CLUSTER
	MAE↓	Accuracy↑	Accuracy↑	Accuracy↑	Accuracy↑
GCN	0.367 ± 0.011	90.705 ± 0.218	55.710 ± 0.381	71.892 ± 0.334	68.498 ± 0.976
GIN	0.526 ± 0.051	96.485 ± 0.252	55.255 ± 1.527	85.387 ± 0.136	64.716 ± 1.553
GAT	0.384 ± 0.007	95.535 ± 0.205	64.223 ± 0.455	78.271 ± 0.186	70.587 ± 0.447
GatedGCN	0.282 ± 0.015	97.340 ± 0.143	67.312 ± 0.311	85.568 ± 0.088	73.840 ± 0.326
GatedGCN-LSPE	0.090 ± 0.001	–	–	–	–
PNA	0.188 ± 0.004	97.94 ± 0.12	70.35 ± 0.63	–	–
DGN	0.168 ± 0.003	–	72.838 ± 0.417	86.680 ± 0.034	–
GSN	0.101 ± 0.010	–	–	–	–
CIN	0.079 ± 0.006	–	–	–	–
CRaW1	0.085 ± 0.004	97.944 ± 0.050	69.013 ± 0.259	–	–
GIN-AK+	0.080 ± 0.001	–	72.19 ± 0.13	86.850 ± 0.057	–
SAN	0.139 ± 0.006	–	–	86.581 ± 0.037	76.691 ± 0.65
Graphormer	0.122 ± 0.006	–	–	–	–
K-Subgraph SAT	0.094 ± 0.008	–	–	86.848 ± 0.037	77.856 ± 0.104
EGT	0.108 ± 0.009	98.173 ± 0.087	68.702 ± 0.409	86.821 ± 0.020	79.232 ± 0.348
Graphormer-URPE	0.086 ± 0.007	–	–	–	–
Graphormer-GD	0.081 ± 0.009	–	–	–	–
GPS	0.070 ± 0.004	98.051 ± 0.126	72.298 ± 0.356	86.685 ± 0.059	78.016 ± 0.180
GRIT (ours)	$0.059 \pm 0.002^*$	98.108 ± 0.111	$76.468 \pm 0.881^*$	$87.196 \pm 0.076^*$	$80.026 \pm 0.277^*$

Long Range Graph Benchmark

- Peptides: Amino acid datasets
- Peptides-func: 10-task multi-label classification
- Peptides-struct: 11-task regression

Model	Peptides-func	Peptides-struct
	AP↑	MAE↓
GCN	0.5930 ± 0.0023	0.3496 ± 0.0013
GINE	0.5498 ± 0.0079	0.3547 ± 0.0045
GatedGCN	0.5864 ± 0.0035	0.3420 ± 0.0013
GatedGCN+RWSE	0.6069 ± 0.0035	0.3357 ± 0.0006
Transformer+LapPE	0.6326 ± 0.0126	$\mathbf{0.2529 \pm 0.0016}$
SAN+LapPE	0.6384 ± 0.0121	0.2683 ± 0.0043
SAN+RWSE	$\mathbf{0.6439 \pm 0.0075}$	0.2545 ± 0.0012
GPS	$\mathbf{0.6535 \pm 0.0041}$	$\mathbf{0.2500 \pm 0.0012}$
GRIT (ours)	$\mathbf{0.6988 \pm 0.0082}^*$	$\mathbf{0.2460 \pm 0.0012}^*$

ZINC-full Dataset

- 250,000 molecule graphs
- Higher order GNNs are included in baselines
- Positional encoding enhanced GNNs are also included

Method	**Model**	**ZINC-full** (MAE ↓)
MPNNs	GIN	0.088 ± 0.002
	GraphSAGE	0.126 ± 0.003
	GAT	0.111 ± 0.002
	GCN	0.113 ± 0.002
	MoNet	0.090 ± 0.002
Higher-order GNNs	δ-2-GNN	0.042 ± 0.003
	δ-2-LGNN	0.045 ± 0.006
PE-GNN	SignNet	$\mathbf{0.024 \pm 0.003}$
Graph Transformers	Graphormer	0.052 ± 0.005
	Graphormer-URPE	0.028 ± 0.002
	Graphormer-GD	$\mathbf{0.025 \pm 0.004}$
	GRIT (ours)	$\mathbf{0.023 \pm 0.001}$

PCQM4Mv2 (OGB)

- Large Scale Graph Datasets (over 3,000,000 graphs)
- GRIT has on par performance with GraphGPS
- GRIT has less parameters than GraphGPS

Method	**Model**	**Valid.** (MAE ↓)	**# Param**
MPNNs	GCN	0.1379	2.0M
	GCN-virtual	0.1153	4.9M
	GIN	0.1195	3.8M
	GIN-virtual	0.1083	6.7M
Graph Transformers	GRPE	0.0890	46.2M
	Graphormer	0.0864	48.3M
	TokenGT (ORF)	0.0962	48.6M
	TokenGT (Lap)	0.0910	48.5M
	GPS-small	0.0938	6.2M
	GPS-medium	0.0858	19.4M
	GRIT (ours)	0.0859	16.6M

Ablation Study

- Change GRIT-attn. to Graphormer-attn. significantly reduces performance
- Update RRWP by flexible attention or not didn't affect too much
- Change global attention to sparse attention (Exphormer-attn.) didn't affect too much
- Change one positional encoding to another didn't affect
- Change positional encoding to structural encoding affected

ZINC	MAE $\downarrow$
GRIT (ours)	$\mathbf{0.059 \pm 0.002}$
- Remove degree scaler	0.076 ± 0.002
- Remove the update of RRWP	0.066 ± 0.005
- Global-attn. $\rightarrow$ Sparse-attn.	0.066 ± 0.002
- Degree scaler $\rightarrow$ Degree encoding	0.072 ± 0.005
- GRIT-attn. $\rightarrow$ Graphormer-attn.	0.117 ± 0.028
- RRWP $\rightarrow$ RWSE	0.081 ± 0.010
- RRWP $\rightarrow$ SPDPE	0.067 ± 0.002

Ablation Study

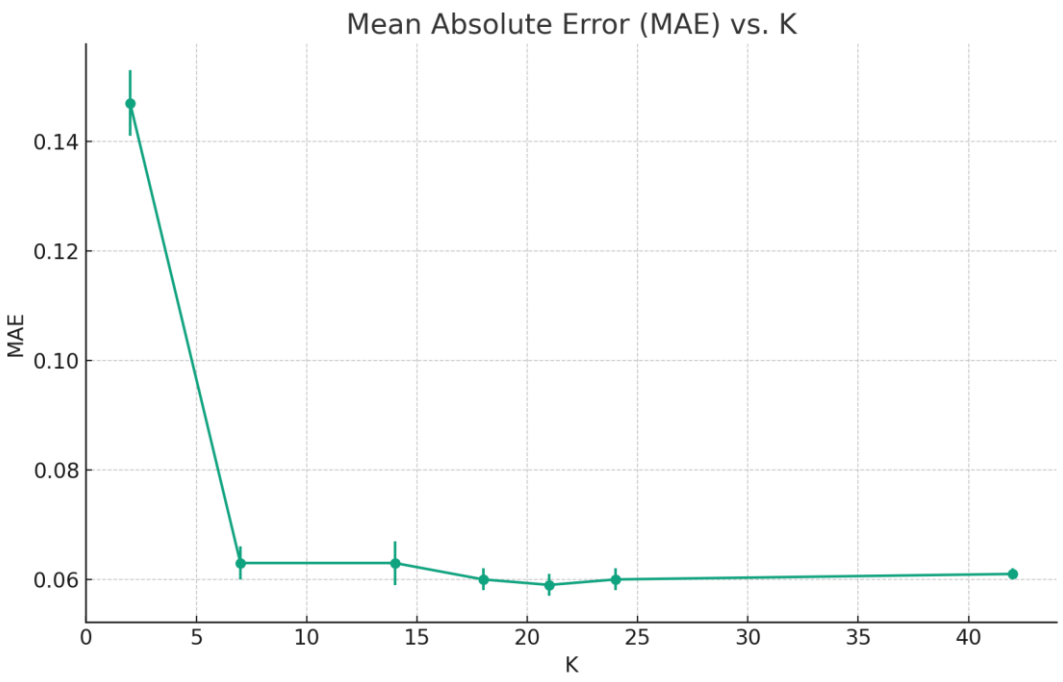

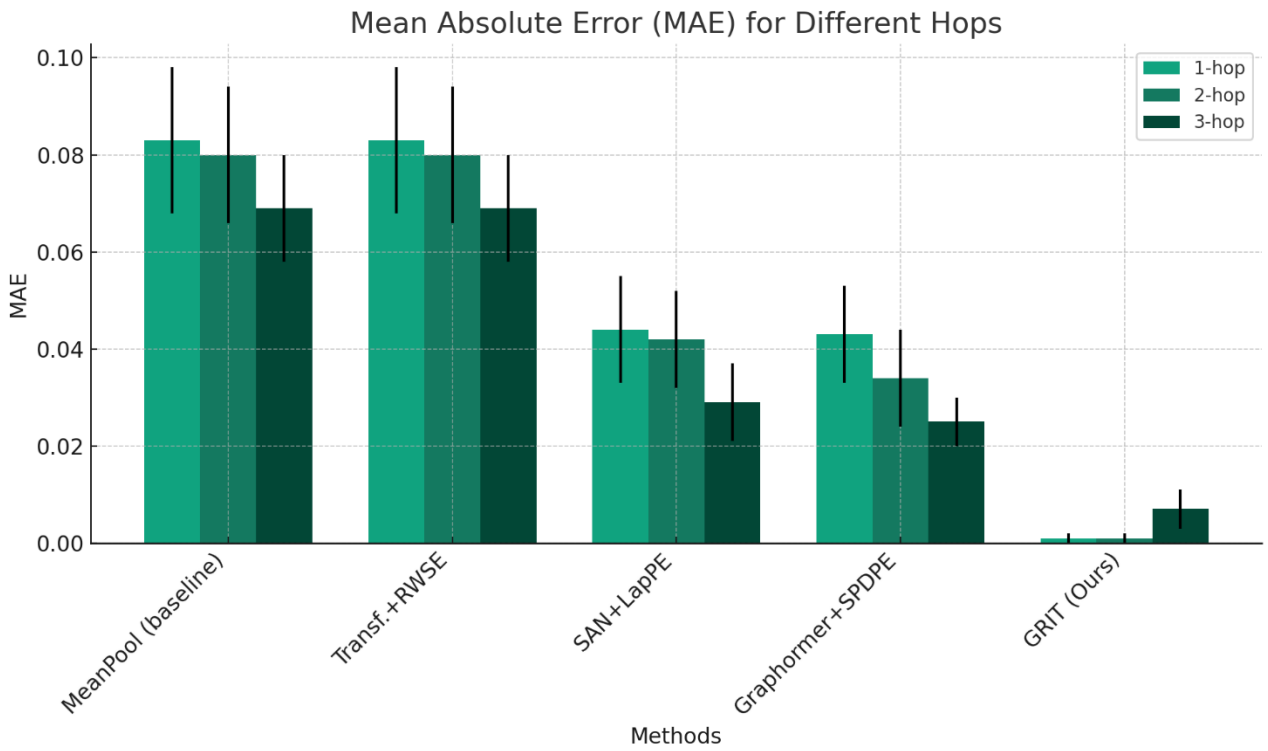

Synthetic Experiments

GRIT attention is successful at matching both the sparsity pattern and attention magnitudes of the target (far left)

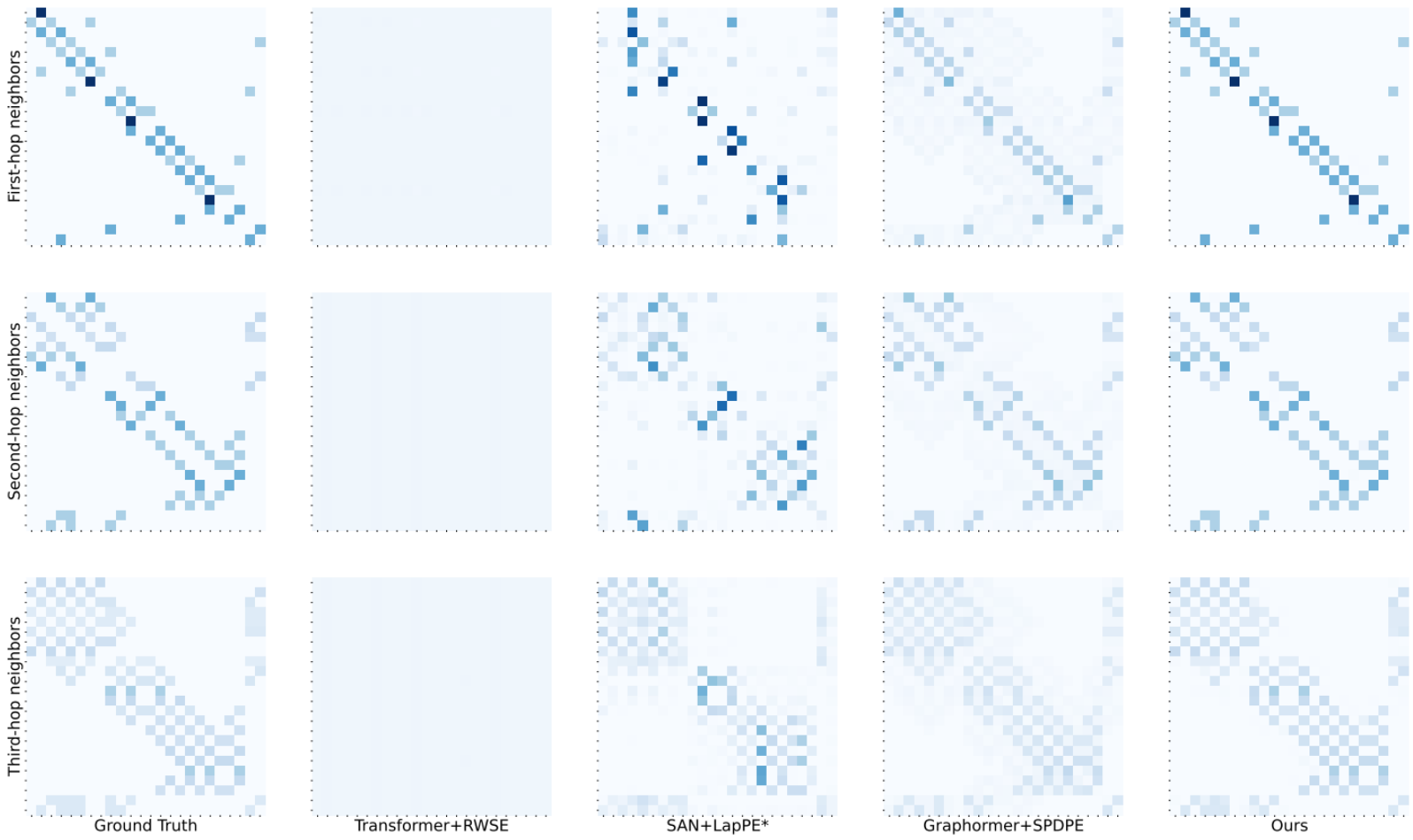

Visualization of learned attention scores for the synthetic experiment on learning to attend to (k = 1, 2, 3)-hop neighbors

Synthetic Experiments

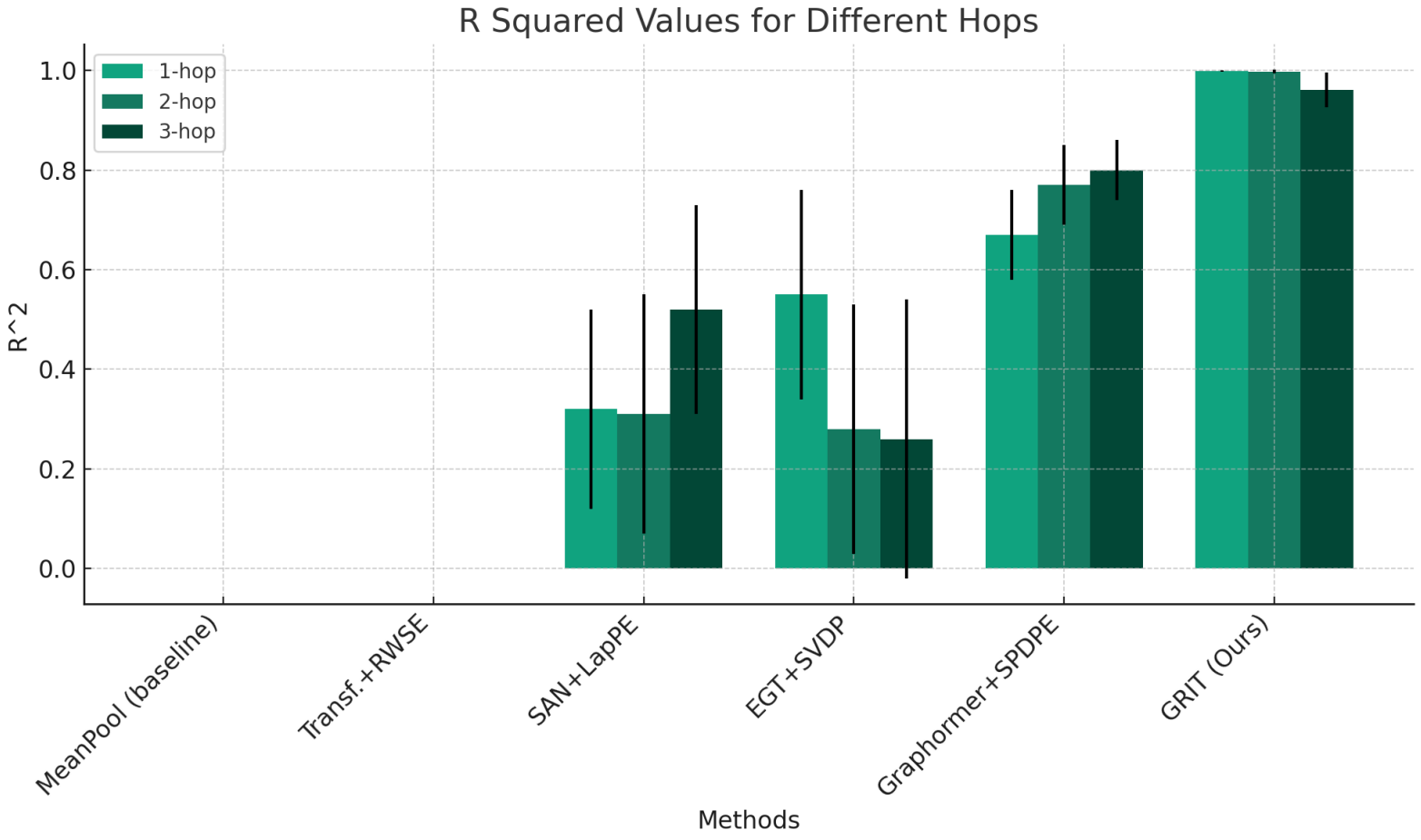

Conclusion

- Three design choices for including graph inductive bias
- RRWP encodings are expressive: capture shortest path distances and generalize families of graph propagation
- RRWP initialization is more expressive than SPD under GD-WL tests
- Synthetic tests show the flexible attention is able to learn graph propagation matrices
- GRIT is new SOTA graph transformer which includes inductive bias without message passing

Opinion: Future works

Advantages:

- Scalability
- Importance of positional encodings
- Explore potential design choices (space) for graph transformer

Disadvantages:

- Bottleneck 1: Complexity of attention: O(n^2)
- Bottleneck 2: Upper bound on expressive power

Any Questions

Others: Graph Transformer w/ Both Attention

- Structure-Aware

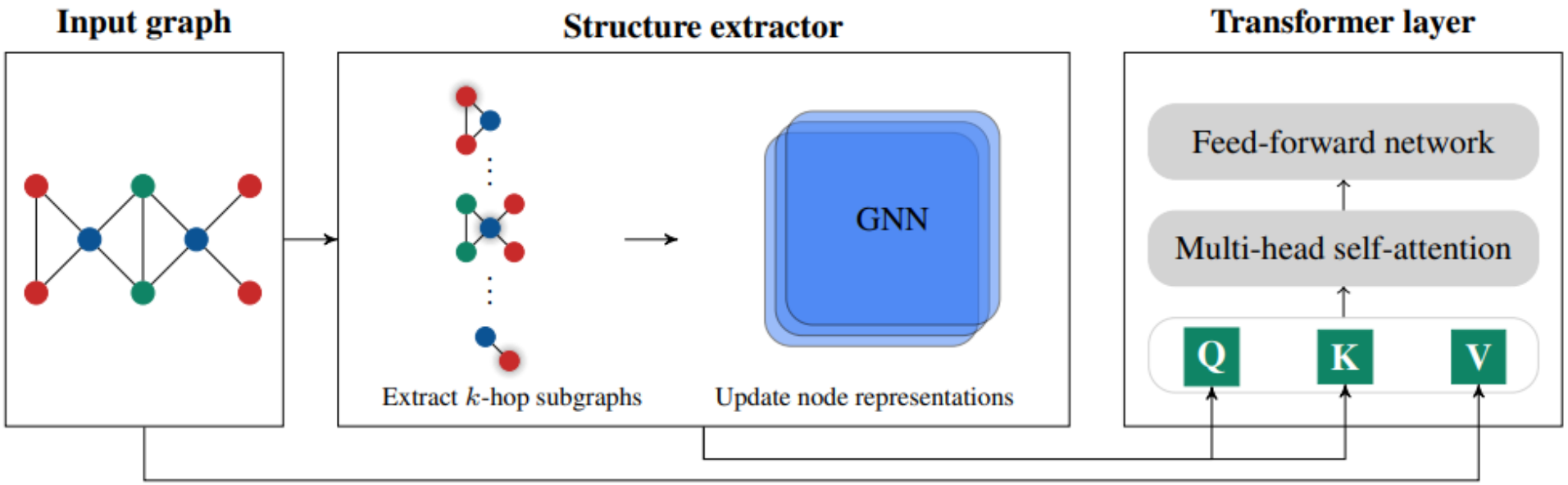

Fig 10: Structure-aware GT (Chen et al. 2022)

Others: Experimental Complexity

Table 12. Runtime and GPU memory for SAN (Kreuzer et al., 2021), GraphGPS (Rampášek et al., 2022) and GRIT (Ours) on ZINC with batch size 32. The timing is conducted on a single NVIDIA V100 GPU and 20 threads of Intel(R) Xeon(R) GOld 6140 CPU @ 2.30GH.

ZINC	SAN	GraphGPS	GRIT (Ours)
MAE ↓	0.139 ± 0.006	0.070 ± 0.004	0.059 ± 0.002
PE Precompute-time	10 sec	11 sec	11 sec
GPU Memory	2291 MB	1101 MB	1865 MB
Training time	57.9 sec/epoch	24.3 sec/epoch	29.4 sec/epoch

Others: Detailed dataset descriptions

Dataset	# Graphs	Avg. # nodes	Avg. # edges	Directed	Prediction level	Prediction task	Metric
ZINC(-full)	12,000 (250,000)	23.2	24.9	No	graph	regression	Mean Abs. Error
MNIST	70,000	70.6	564.5	Yes	graph	10-class classif.	Accuracy
CIFAR10	60,000	117.6	941.1	Yes	graph	10-class classif.	Accuracy
PATTERN	14,000	118.9	3,039.3	No	inductive node	binary classif.	Weighted Accuracy
CLUSTER	12,000	117.2	2,150.9	No	inductive node	6-class classif.	Accuracy
Peptides-func	15,535	150.9	307.3	No	graph	10-task classif.	Avg. Precision
Peptides-struct	15,535	150.9	307.3	No	graph	11-task regression	Mean Abs. Error
PCQM4Mv2	3,746,620	14.1	14.6	No	graph	regression	Mean Abs. Error

Others: Hyper-parameter settings

Hyperparameter	ZINC/ZINC-full	MNIST	CIFAR10	PATTERN	CLUSTER
# Transformer Layers	10	3	3	10	16
Hidden dim	64	52	52	64	48
# Heads	8	4	4	8	8
Dropout	0	0	0	0	0.01
Attention dropout	0.2	0.5	0.5	0.2	0.5
Graph pooling	sum	mean	mean	–	–
PE dim (RW-steps)	21	18	18	21	32
PE encoder	linear	linear	linear	linear	linear
Batch size	32/256	16	16	32	16
Learning Rate	0.001	0.001	0.001	0.0005	0.0005
# Epochs	2000	200	200	100	100
# Warmup epochs	50	5	5	5	5
Weight decay	$1e-5$	$1e-5$	$1e-5$	$1e-5$	$1e-5$
# Parameters	473,473	102,138	99486	477,953	432,206

Others: Hyper-parameter settings

Hyperparameter	Peptides-func	Peptides-struct	PCQM4Mv2
# Transformer Layers	4	4	16
Hidden dim	96	96	256
# Heads	4	8	8
Dropout	0	0	0.1
Attention dropout	0.5	0.5	0.1
Graph pooling	mean	mean	mean
PE dim (walk-step)	17	24	16
PE encoder	linear	linear	linear
Batch size	32	32	256
Learning Rate	0.0003	0.0003	0.0002
# Epochs	200	200	150
# Warmup epochs	5	5	10
Weight decay	0	0	0
# Parameters	443,338	438,827	15.3M