HIGH PERFORMANCE CONTROLLER FOR APPLICATION PROCESSING & REAL-TIME CONTROL

RZ/T2H & N2H SERIES INTRODUCTION

RENESAS ELECTRONICS CORPORATION,
EMBEDDED PROCESSING PRODUCT GROUP
EMBEDDED PROCESSING 1ST BUSINESS DIVISION
RZ/T & RZ/N teams

DEC 2024
EP1AP-AA-24-0026-04

© 2024 Renesas Electronics Corporation. All rights reserved.

CONTENTS

- Product Positioning in Renesas MCU/MPU — Page 3
- Target Applications — Page 8
- Product Key Features and Benefits — Page 12
- Software development environment — Page 25
- Winning Combination — Page 44
- Summary — Page 47

© 2024 Renesas Electronics Corporation. All rights reserved.

PRODUCT POSITIONING

© 2024 Renesas Electronics Corporation. All rights reserved.

BROAD AND SCALABLE PRODUCT PORTFOLIO

Microcontrollers & Microprocessors, System-on-Chips (SoCs)

RZ — High-end 32/64-bit MPUs
High-resolution HMI, Industrial network & real-time control

RA — Advanced 32-bit MCUs
Arm ecosystem, Advanced security, Intelligent IoT

RX — High Power Efficiently 32-bit MCUs
Motor control, Capacitive touch, Functional safety, GUI

RISC-V products — General-purpose 64-bit MPUs (RZ/Five Group)
Application-specific 32-bit MCUs

RL78 — Ultra-low Energy 8/16-bit MCUs
Bluetooth® Low Energy, SubGHz, LoRa®-based Solutions
Automotive actuators & sensors, Low-end ECUs

RH850 — Automotive 32-bit MCUs
Rich functional safety and embedded security features

R-Car — Automotive SoCs
Next generation of automotive computing

Analog and Power Devices

- Analog products
- Clocks & Timing
- Interface & Connectivity
- Memory & Logic
- Power & Power management
- Programmable Mixed-signal, ASIC, & IP products
- RF products
- Sensor products
- Space & Harsh environment

- Timing
- Wireless Power
- Battery Management
- Power Devices
- Power Management
- Sensors
- Video & Display

© 2024 Renesas Electronics Corporation. All rights reserved.

RENESAS RZ FAMILY

HIGH-PERFORMANCE APPLICATION FOCUSED AND GENERAL-PURPOSE PROCESSORS

Vision AI

RZ/V Series

AI accelerator + Linux

Industrial Network

RZ/N Series

Multi-protocol Industrial Ethernet with Redundancy + Linux/ RTOS

Industrial real-time control

RZ/T Series

Multi-protocol Industrial Ethernet Real-time control + Linux/RTOS

RENESAS RZ

Human Machine Interface & IoT Edge

RZ/G Series

3D Graphics + Linux/Android™

RZ/A Series

2D Graphics + RTOS

Vision AI	Renesas own cutting-edge AI technology "DRP-AI" for embedded AI application
Network	TSN and Multi-protocol Industrial network support
Real-time	High-performance Processing and High Precision Realtime Control
HMI	High-performance CPU operation and Graphics/Video Processing
Edge IoT	High-performance CPU and High-speed interfaces for IoT Edge products

© 2024 Renesas Electronics Corporation. All rights reserved.

RENESAS

PRODUCT ROADMAP FOR RZ/T AND RZ/N SERIES

ENHANCING PRODUCT PORTFOLIO TO COVER CUSTOMER'S VARIOUS APPLICATIONS

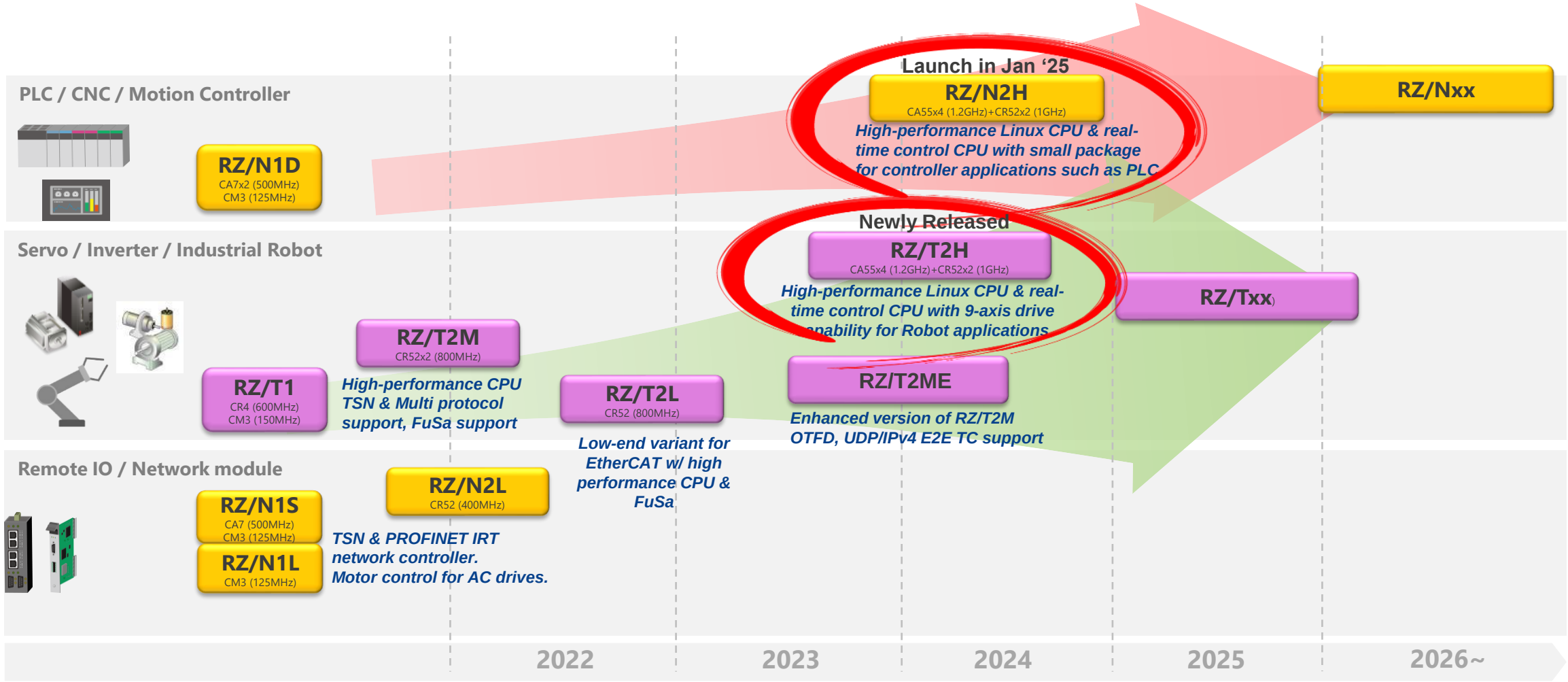

* Nickname for under planning products are tentative

© 2024 Renesas Electronics Corporation. All rights reserved.

PRODUCT LINEUP OF RZ/T2 AND RZ/N2 GROUPS

Series		RZ/T			RZ/N	
Group		RZ/T2H	RZ/T2M&ME	RZ/T2L	RZ/N2H	RZ/N2L
Target application		Industrial robot, Motion controller, PLC	Mid range servo, Industrial robot	Low end servo, Inverter	PLC, Motion controller, Industrial robot	Remote I/O, Network module
Application Core		**Cortex-A55 1.2GHz x4**	-	-	**Cortex-A55 1.2GHz x4**	-
Realtime Core		Cortex-R52 **1.0GHz** x2	Cortex-R52 800MHz x2	Cortex-R52 800MHz	Cortex-R52 **1.0GHz** x2	Cortex-R52 400MHz
DDR		**LPDDR4-3200 32bit**	-	-	**LPDDR4-3200 32bit**	-
Industrial Ethernet		**4** Ether ports **3** GMAC Ethernet Switch ESC, TSN	3 Ether ports 1 GMAC Ethernet Switch ESC, TSN	ESC	**4** Ether ports **3** GMAC Ethernet Switch ESC, TSN	3 Ether ports 1 GMAC Ethernet Switch ESC, TSN
Motor control	GPT/MTU (for motor control)	**56ch**/9ch **(Up to 9 axes)**	7ch/9ch (2 axes)	7ch/9ch (2 axes)	**56ch**/9ch **(Up to 6 axes)**	4ch/9ch
Motor control	Sigma Delta I/F	**30ch**	6ch	6ch	**23ch**	6ch
Motor control	Absolute Encoder I/F	**16ch**	2ch	2ch	**14ch**	-
PCIe		**PCIe (Gen3) x2**	-	-	**PCIe (Gen3) x2**	-
HMI		**Parallel RGB**	-	-	**Parallel RGB**	-
Host IF		Serial	-	Serial	Serial	Serial / Parallel
Package		FCBGA 729pin (23x23)	FBGA 320pin (17x17) FBGA 225pin (13x13) LQFP 176pin (24x24) LQFP 126pin (14x20)	FBGA 196pin (12x12)	FCBGA 576pin (23x23)	FBGA 225pin (23x23) FBGA 121pin (10x10)
Status		MP	MP	MP	MP Jan 2025	MP

© 2024 Renesas Electronics Corporation. All rights reserved.

RENESAS

TARGET APPLICATIONS

© 2024 Renesas Electronics Corporation. All rights reserved.

RZ/T2H AND N2H TARGET APPLICATION EXAMPLES

Industrial Robot

SCARA Robot

Collaborative Robot

AGV / AMR

Applications require Multi-Axis Motor Control

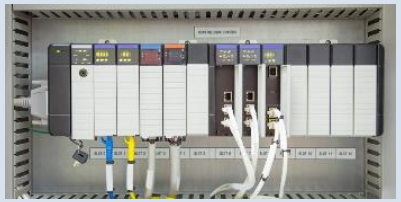

PLC / DCS / Motion controller

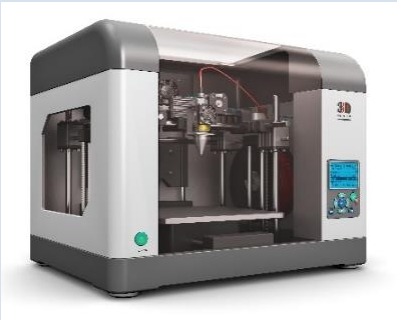

CNC

Applications require Multi-Network

© 2024 Renesas Electronics Corporation. All rights reserved.

PROPOSAL EXAMPLE – ROBOTS

Selectable solution from various products to fit to customer's requirements and system configurations.

RZ/T2H one chip implementation (ex. Industrial Robot)

RZ/T2H realize motion control and motor control in one chip

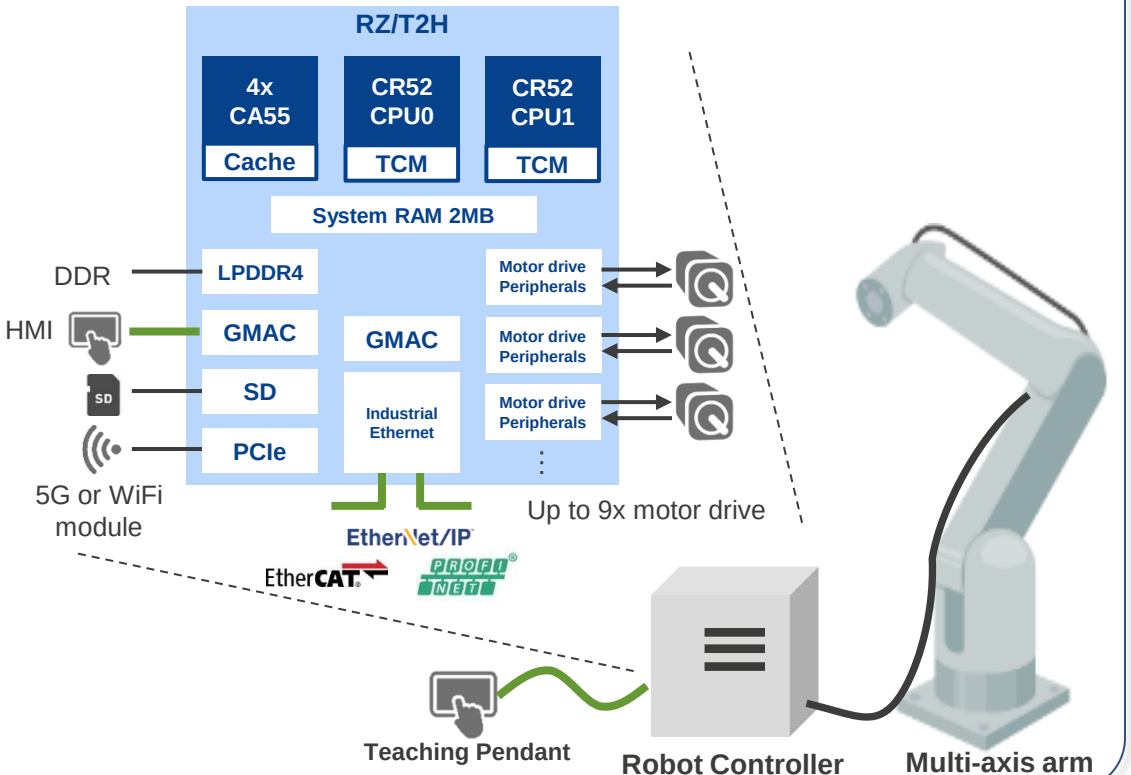

RZ/N2H and RZ/T2L two chip implementation (ex. Collaborative robot)

RZ/N2H realize motion control and Network Controller
RZ/T2L realize each axis control

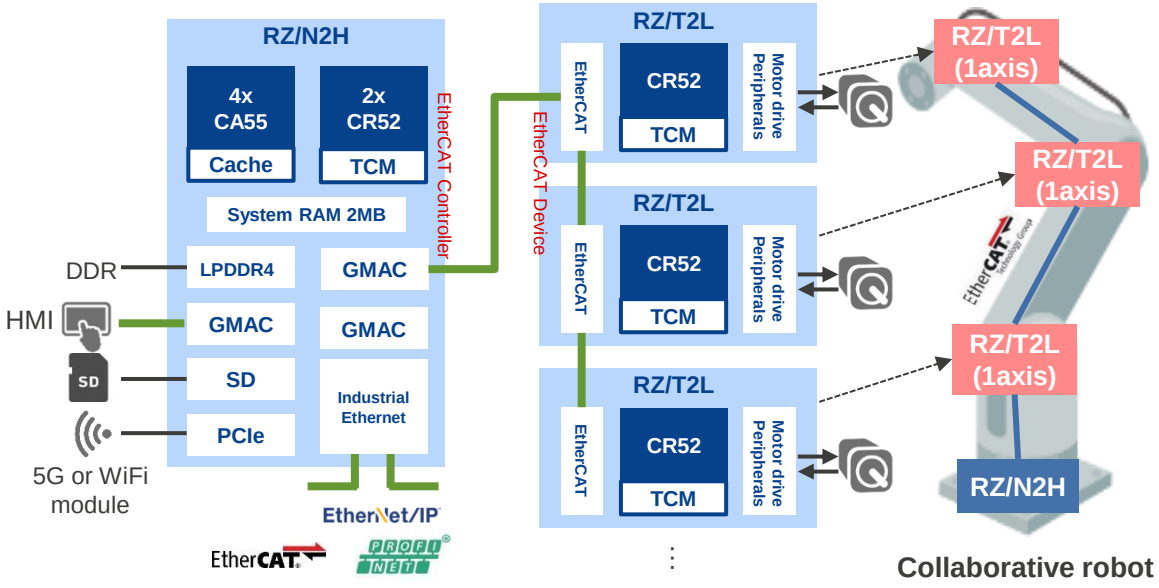

© 2024 Renesas Electronics Corporation. All rights reserved.

PROPOSAL EXAMPLE – PLC & MOTION CONTROLLER

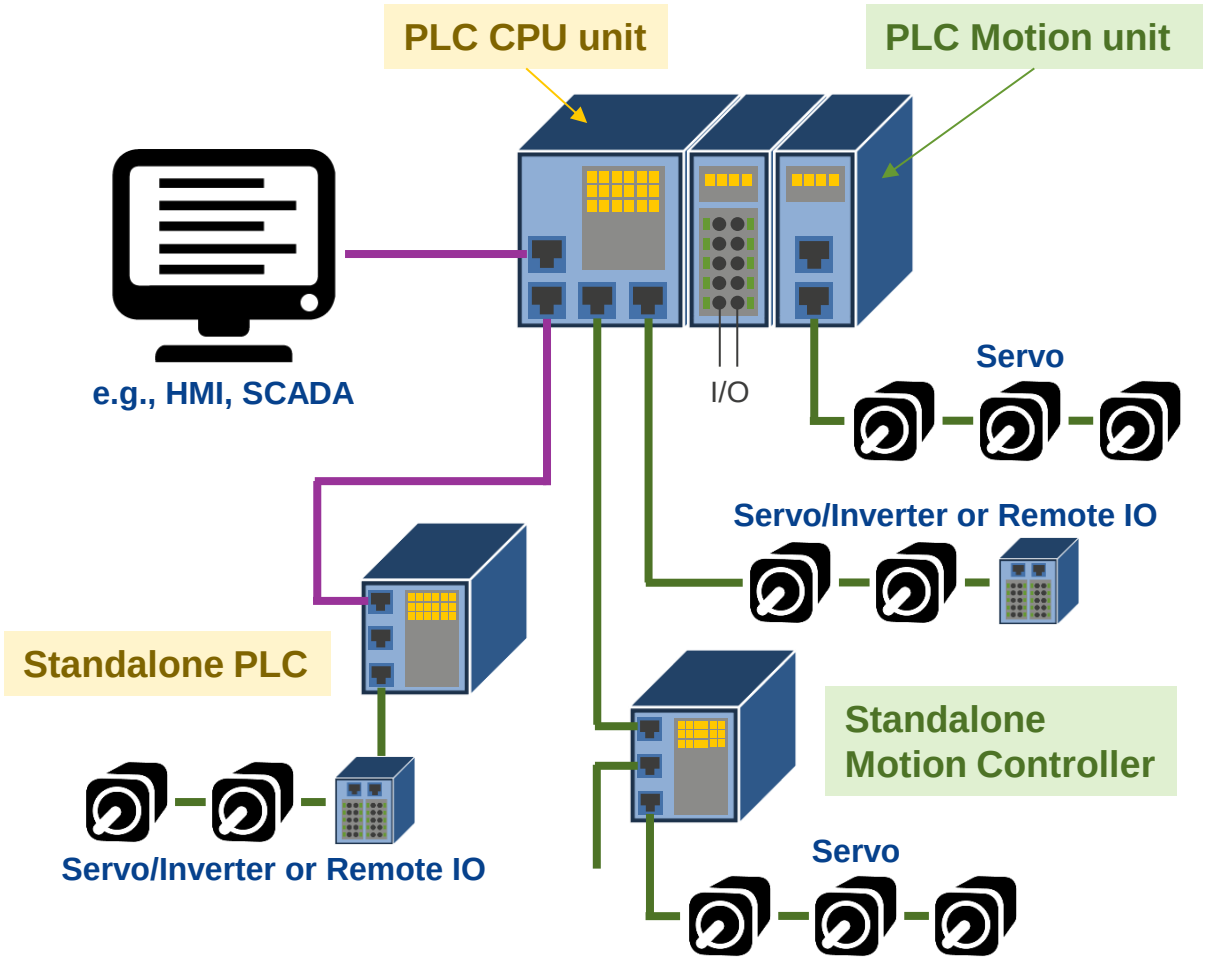

RZ/T2H Proposal

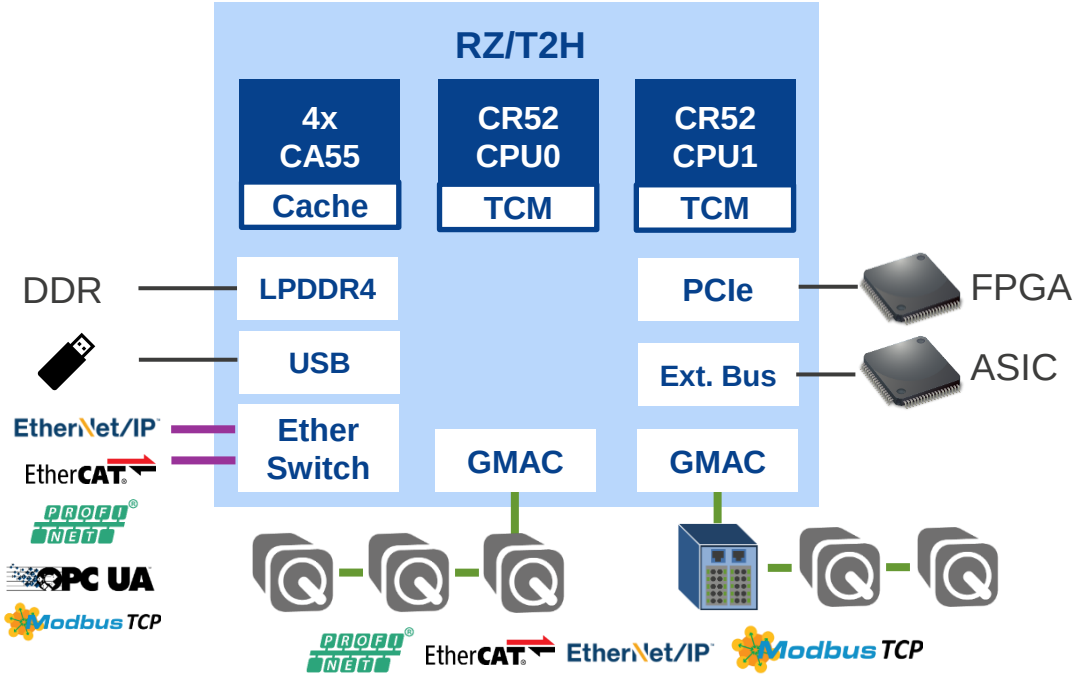

Key requirements

- ✓ **Multi-Network Support** including Industrial Ethernet controller and device
- ✓ **High Application Processing Power** to execute user-defined sequence processing and IE controller
- ✓ **High Real-time Performance** to support Industrial Ethernet device especially standalone PLC and motion controllers.
- ✓ **High-Speed Connectivity** such as PCIe or External Bus to FPGA or custom ASIC which often used for backplane bus or proprietary network.

© 2024 Renesas Electronics Corporation. All rights reserved.

RENESAS

PRODUCT KEY FEATURES AND BENEFITS

© 2024 Renesas Electronics Corporation. All rights reserved.

RZ/T2H • RZ/N2H BLOCK DIAGRAM

System
- Arm® Debugger (CoreSight®)
- Arm® TrustZone®
- 3unit x 16ch DMAC
- Interrupt Controller
- 2ch Trigonometric

CPU
Application Cores
4x Cortex®-A55 1.2GHz
- L1 I-Cache 32KB
- L1 D-Cache 32KB
- L3 cache 1MB

Real-Time Cores
Cortex®-R52 1.0GHz
- L1 I/D-Cache 16KB
- ATCM 512KB
- BTCM 64KB

Cortex®-R52 1.0GHz
- L1 I/D-Cache 16KB
- ATCM 512KB
- BTCM 64KB

Interfaces
- LPDDR4-3200 32bit
- 2ch xSPI
- 2ch SD/eMMC

- Industrial Ethernet Switch w/ TSN
- 3ch GMAC w/ TSN
- 4x Ethernet ports
- EtherCAT Slave Controller
- 2ch PCIe Gen3
- 1ch USB2.0

- 4ch SPI
- 3ch I2C
- 18ch SCI
- 2ch CAN-FD

- External Bus
- Serial Host IF
- 16ch / 14ch Encoder IF

Timer
- 1ch x 32bit & 8ch x 16bit MTU3
- 56ch x 32bit GPT
- 6ch x 16bit & 2ch x 32bit CMT
- 6ch WDT

Memory
- System RAM 2MB

HMI
- LCD controller, WXGA, 60fps

Security (Option)
- Secure boot
- Crypto Engine
- TRNG
- Unique ID
- JTAG Authentication

Analog
- 4ch x 2units & 6ch / 15ch x 1unit 12bit ADC
- 30ch / 23ch Delta-Sigma IF

CPU specifications
- Arm Cortex-A55 1.2GHz x4
  - ✓ L1 I/D-cache 32KB per CPU
  - ✓ L3 cache 1MB
- Arm Cortex-R52 1.0GHz x2
  - ✓ L1 I/D-cache 16KB
  - ✓ ATCM 512KB per CPU
  - ✓ BTCM 64KB per CPU

Industrial Ethernet
- EtherCAT, Profinet RT/IRT, Ethernet I/P, CC link IE Basic, TSN, OPC UA over TSN

Motor Control Peripherals
- Support up to 9 axes / 6axes
  - ✓ PWM Timer: MTU 9ch
  - ✓ PWM Timer: GPT 56ch
  - ✓ Delta-Sigma IF: 30ch / 23ch
  - ✓ 12bit ADC: 3units
  - ✓ Encoder IF: 16ch / 14ch

Package
- FCBGA729, 23x23mm, 0.8mm pitch
- FCBGA576, 21x21mm, 0.8mm pitch

© 2024 Renesas Electronics Corporation. All rights reserved.

RENESAS

RZ/T2H & N2H OVERVIEW

#1 Integration of Powerful Application Processing and Precise Real-Time Performance

- 4x Cortex-A55 Processors @Max 1.2GHz
  with 32/32KB L1 I/D-cache and 1MB L3 cache
- 2x Cortex-R52 Processors @Max 1.0GHz
  with Tightly couple memory (TCM) 512K+64KB RAM per processor
- LPDDR4-3200 32bit
- Shared RAM: 2.0MB

#2 Full Set of Peripherals for Multi-Axis Motor Control up to 9 Axes with One Chip

- Peripheral for up to 9 axes motor control with RZ/T2H, 6axes with RZ/N2H
  - PWM timer 56ch
  - 10 units x 3ch ΔΣ I/F
  - 16ch Absolute Encoder IF
  - Incremental Encoder
- High speed SAR ADC 4MSPS 12bit
- Low Latency Peripheral port (LLPP) bus architecture

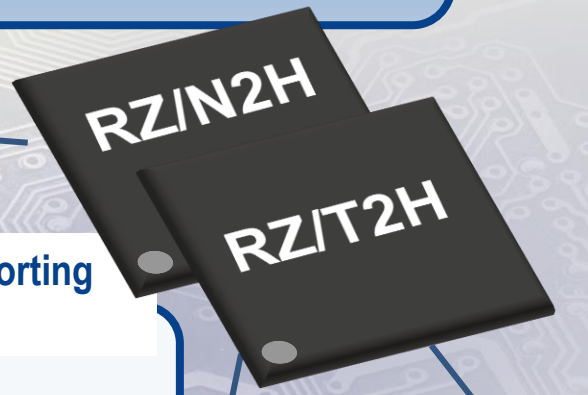

#3 Extensive Ethernet Functionalities Supporting Industrial Ethernet(IE) Controller and Device

- 4x external Ethernet ports
- 3ch GMAC w/ TSN
- 3 port Ethernet Switch w/ TSN
- EtherCAT Slave Controller(ESC)

#4 Abundant Peripherals

- High speed communication interfaces
  - PCIe Gen3 (up to 8.0 GT/s) 2 lanes
  - SD/eMMC host interface 2ch
  - CAN-FD 2ch
- LCD Controller WXGA (1280 × 800), 60 fps
- Security Function

© 2024 Renesas Electronics Corporation. All rights reserved.

KEY FEATURE #1 – CPU

#1 Integration of Powerful Application Processing and Precise Real-Time Control

- **Powerful application CPU and high-speed DDR**
  - **Cortex-A55 Quad 1.2GHz with 32/32KB** L1 I/D-cache and **1MB** L3 cache
    Cortex-A55 1.21~1.97x faster than CA53

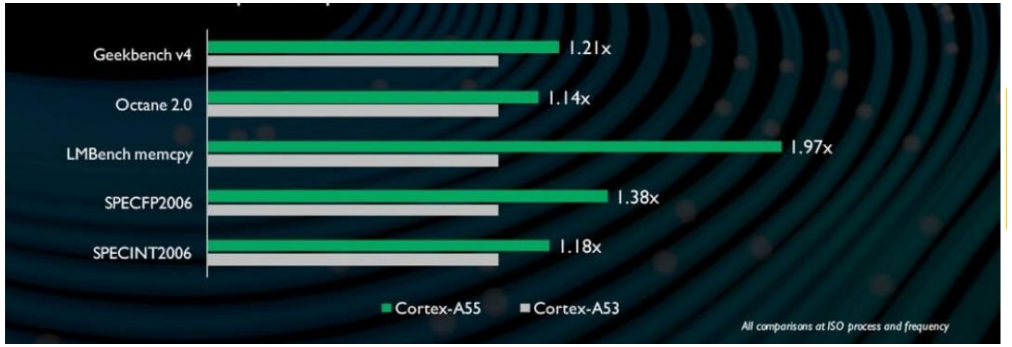

Arm Cortex-A55: high efficiency, sustained performance - Architectures and Processors blog - Arm Community blogs - Arm Community

  - **LPDDR4-3200 32bit**

- **High real-time performance CPU and dedicated low latency bus**
  - **2x Cortex-R52 1.0GHz**
    with 16/16KB L1 I/D-cache and **512KB/64KB A/BTCM** per core
  - CR52 accesses motor control peripherals at very low latency
    through Low Latency Peripheral Port (LLPP).
  - **Trigonometric Function Unit (TFU)** further accelerates motor control program execution.

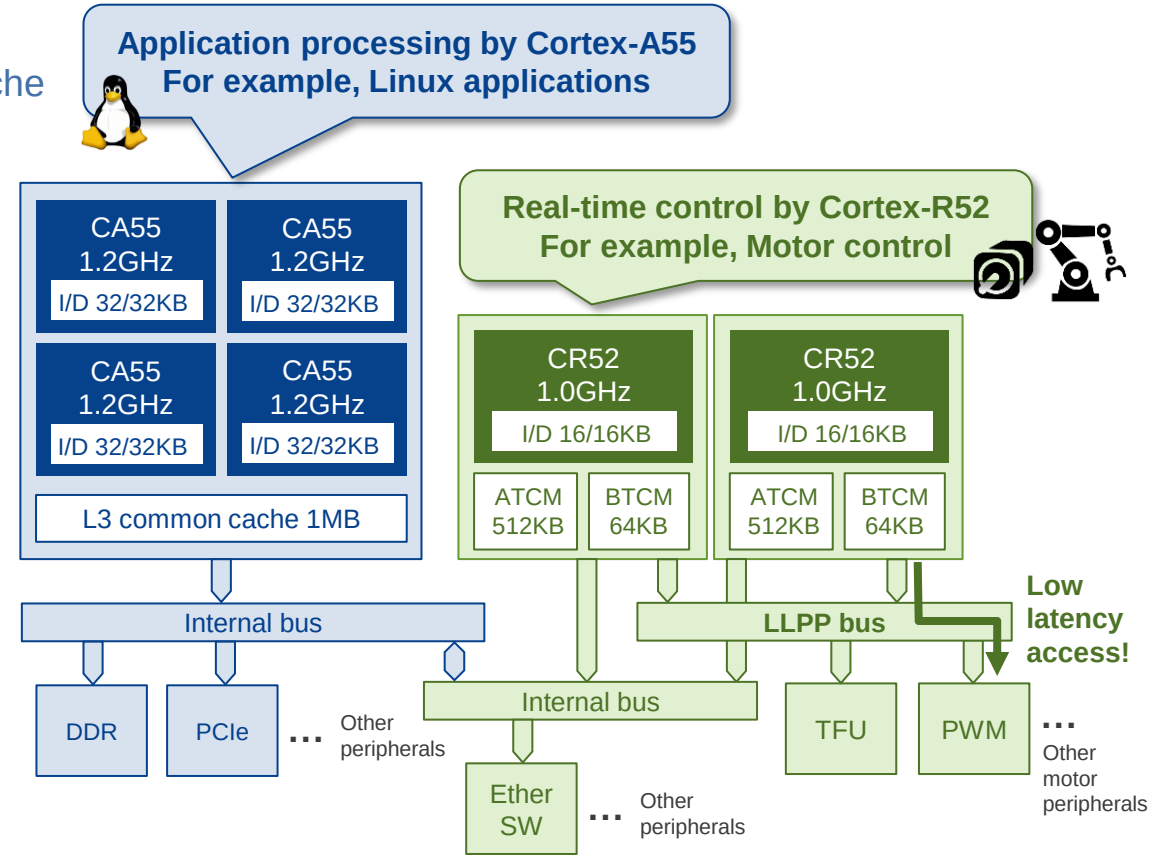

© 2024 Renesas Electronics Corporation. All rights reserved.

RENESAS

KEY FEATURE #1 – CPU (CONTINUED)

RZ/T2H and N2H Achieves 30% Improvement for current loop execution from RZ/T2M

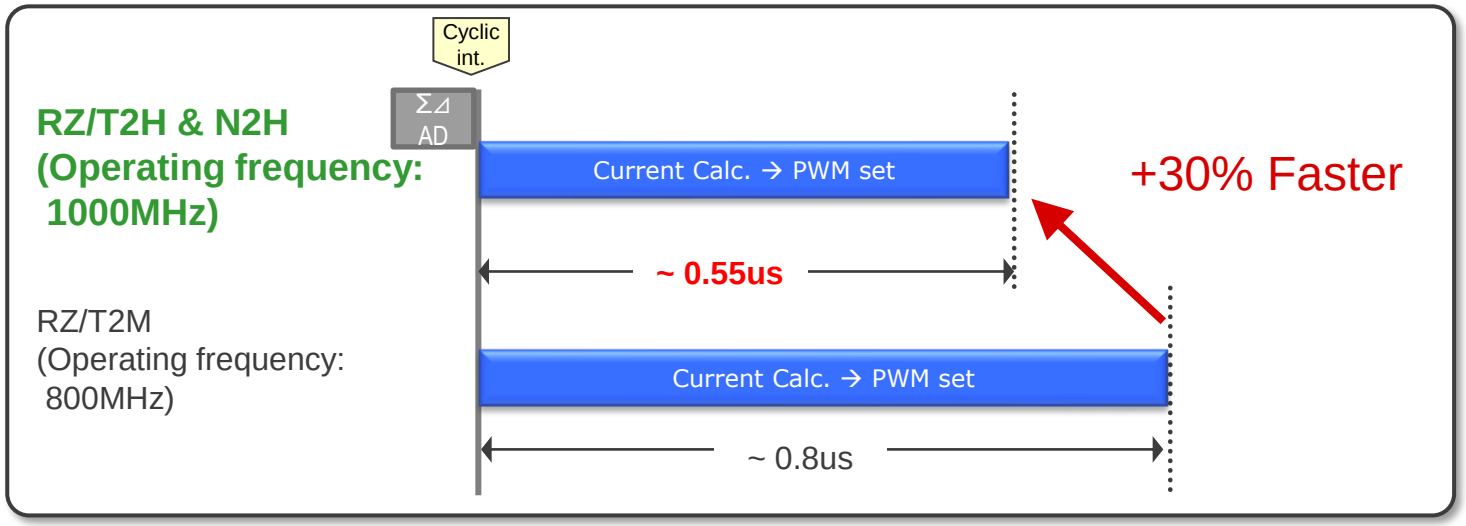

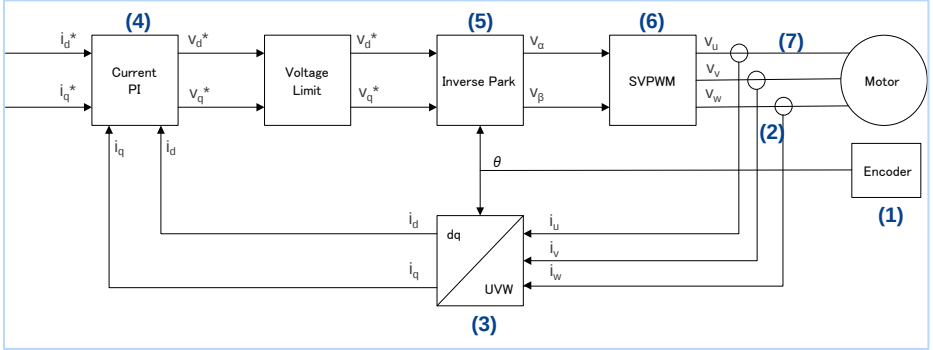

(1) Get position information from encoder
(2) Get DSMIF value regarding UVW monitoring
(3) Clarke & Park transformation
(4) Control regarding Current PI
(5) Inverse Park transformation
(6) Inverse Clarke transformation and SVM (Space Vector Modulation)
(7) PWM duty ratio update

Enhanced Current Loop Calculation by RZ/T2H&N2H

- ✓ Faster Operating frequency of CPU & TCM (800MHz → 1000MHz).
- ✓ Faster internal bus speed (200MHz → 250MHz)
- ✓ Enhanced Arithmetic unit for trigonometric function (TFU) contributes to reduce calculation time

© 2024 Renesas Electronics Corporation. All rights reserved.

KEY FEATURES #1 – CPU (CONTINUED) PERFORMANCE BENCHMARK

Application Processing Performance Comparison

RZ/T2H Achieves 1.26 Times Better Performance!

- UNIX BENCH RZ/T2H (CA55 x1) vs Competitor (CA53 x1)

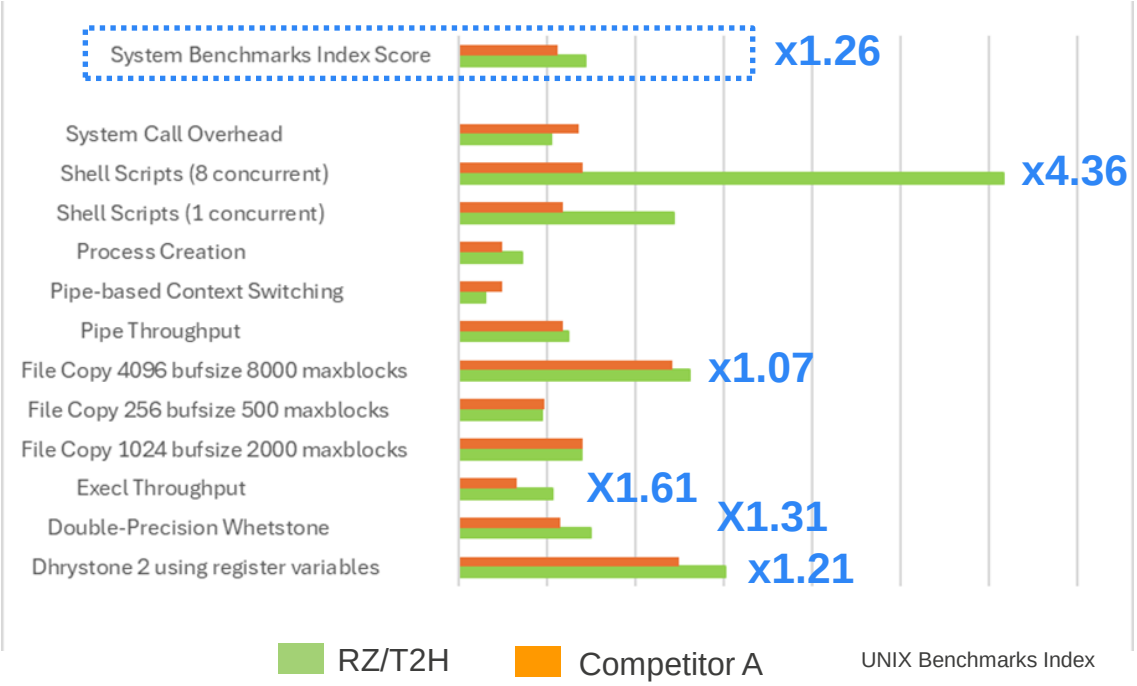

Real-Time Performance Comparison RZ/T2H (CR52 x1) vs Competitor (CR5 x1)

RZ/T2H Achieves 1.7~2.1 Times Better Performance !

- Current Loop Processing for Motor Control

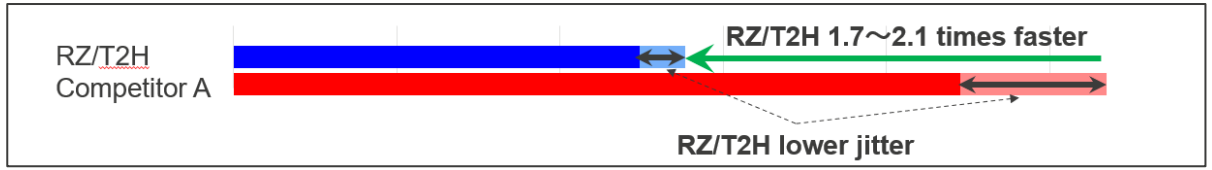

- Motor Control Register Access Time

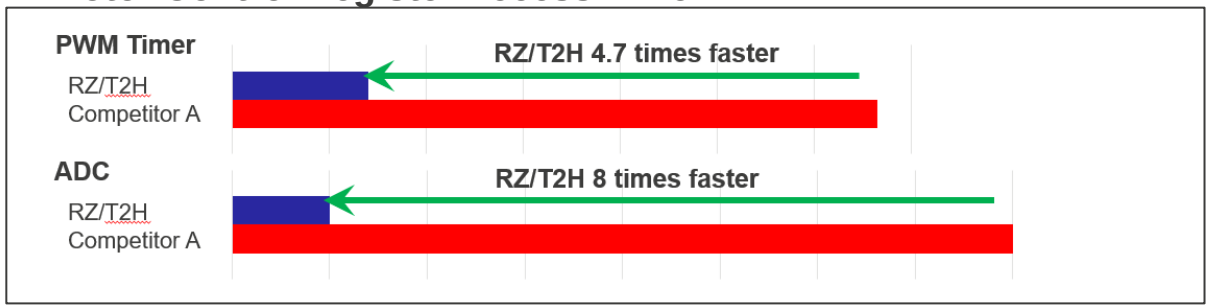

- Execution Time Trigonometric Function used for Current Loop

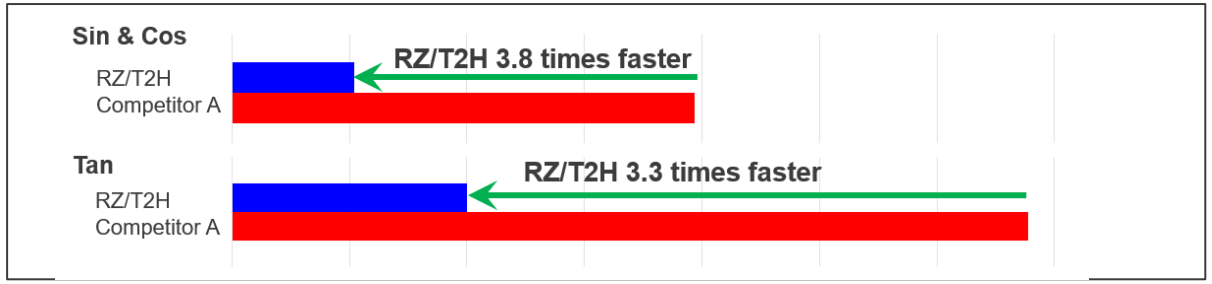

© 2024 Renesas Electronics Corporation. All rights reserved.

KEY FEATURES #2 – MULTI-AXIS MOTOR CONTROL

#2 Full Set of Peripherals for Multi-Axis Motor Control up to 9 Axes with One Chip

- **Peripherals supporting up to 9 axes motor control with RZ/T2H**
  - **27ch PWM output**: 3ch x 9 axes (56ch x 32bit GPT)
  - **10units ΔΣ I/F**: 10units x 3ch
  - **18ch Incremental encoder**: 2ch x 9 axes
  - **16ch Absolute encoder**: 1ch x 9 axes or 2ch x 8 axes
    EnDat2.2, HyperfaceDSL, BiSS-C, A-format, FA-CODER, SSI supported.
  - CR52 accesses all peripherals above though **LLPP (low latency peripheral port) for faster access**

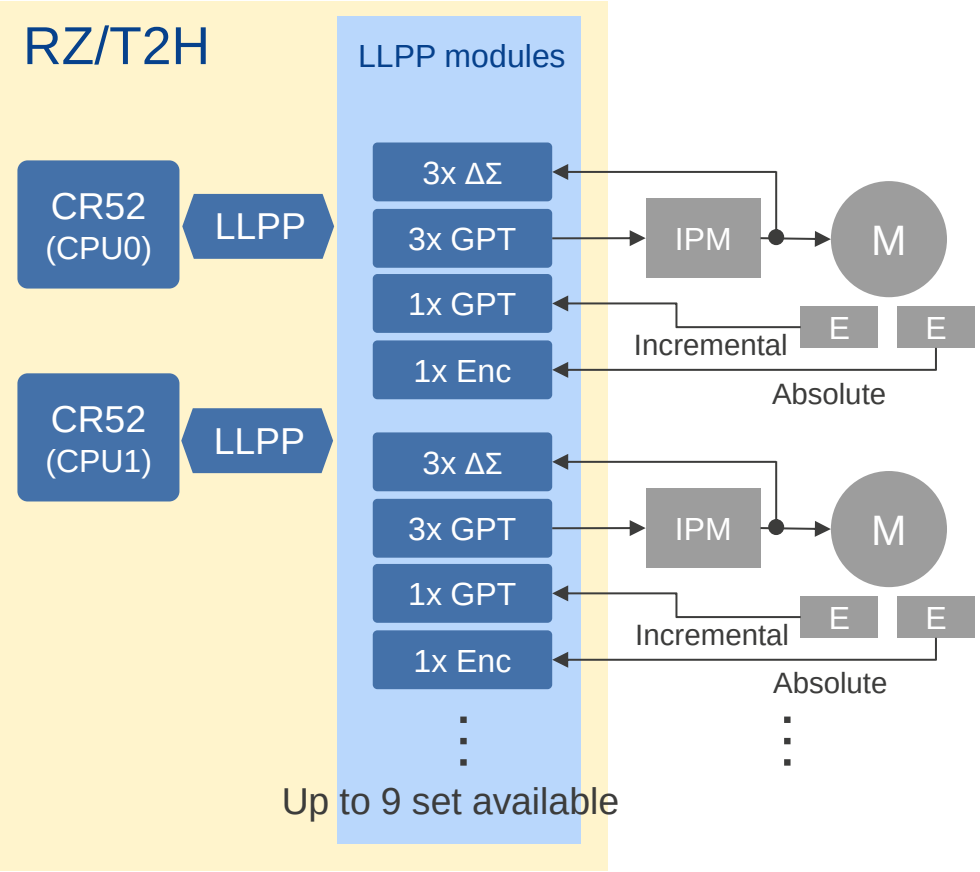

- **One-chip solution for multi-axis motor control applications.**

Ordinary implementation requires FPGA for multi-axis motor control

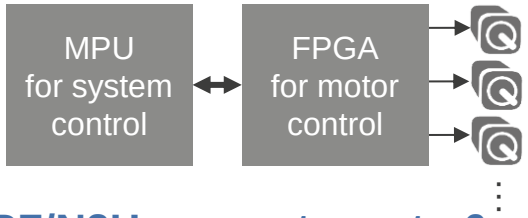

RZ/T2H can cover both system and multi-axis motor control!

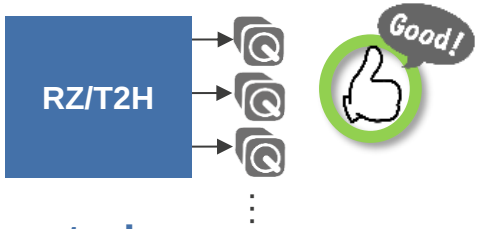

- **RZ/N2H supports up to 6 axes motor control**

© 2024 Renesas Electronics Corporation. All rights reserved.

KEY FEATURE #3 – ETHERNET FUNCTIONALITIES

#3 Extensive Ethernet Functionalities Supporting Industrial Ethernet(IE) Controller and Device

- Ethernet functionalities in RZ/T2H
  - 4x external Ethernet ports
  - 3ch GMAC w/ TSN
  - 3 port Ethernet Switch w/ TSN
  - EtherCAT Slave Controller(ESC)
- Extensive Ethernet functionalities flexibly meet various application requirements.

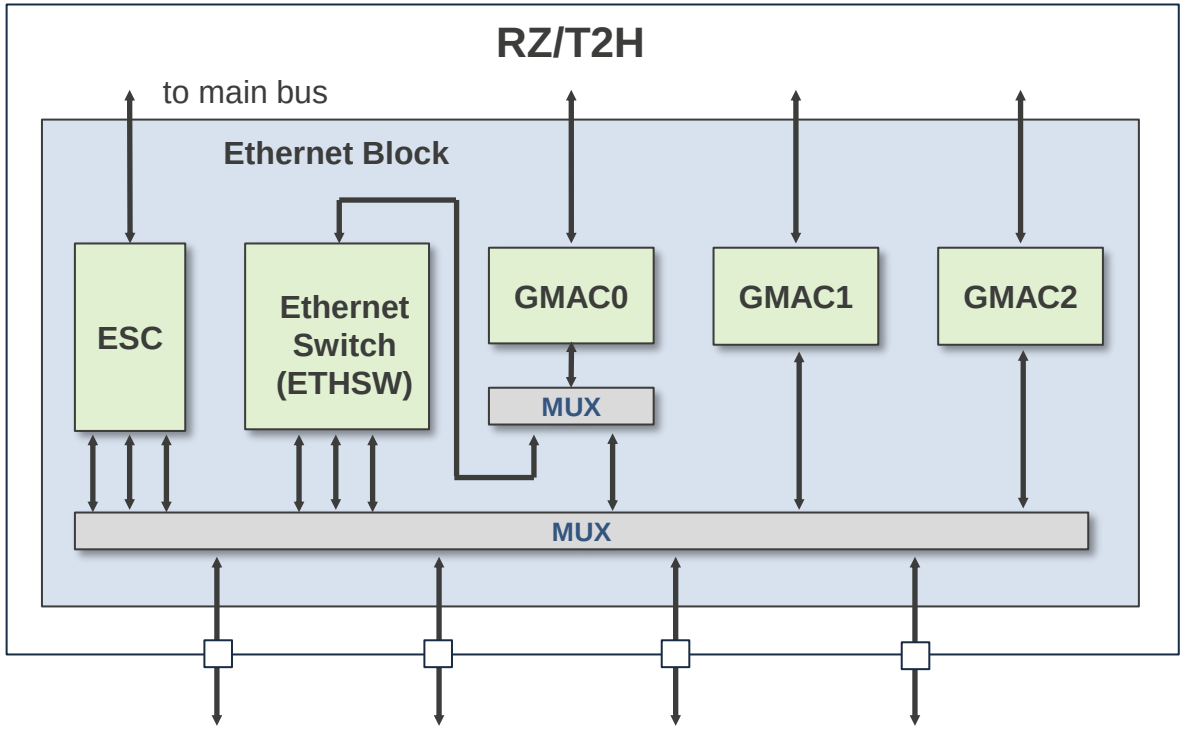

Application basis proposal examples

Application	Port0	Port1	Port2	Port3
Industrial Robot	Industrial Ethernet Device		Ethernet to HMI	Ethernet for other use
PLC	Ethernet to SCADA	IE Controller	IE Controller	
CNC	Industrial Ethernet Device		IE Controller	Ethernet to HMI
Motion Controller	Industrial Ethernet Device		IE Controller	IE Controller

© 2024 Renesas Electronics Corporation. All rights reserved.

KEY FEATURE #3 – ETHERNET FUNCTIONALITIES INDUSTRIAL ROBOT USE CASE

#3 Extensive Ethernet Functionalities Supporting Industrial Ethernet(IE) Controller and Device

- Ethernet functionalities in RZ/T2H
  - 4x external Ethernet ports
  - 3ch GMAC w/ TSN
  - 3 port Ethernet Switch w/ TSN
  - EtherCAT Slave Controller(ESC)
- Extensive Ethernet functionalities flexibly meet various application requirements.

Application basis proposal examples

Application	Port0	Port1	Port2	Port3
Industrial Robot	**Industrial Ethernet Device**		**Ethernet to HMI**	**Ethernet for other use**
PLC	Ethernet to SCADA	IE Controller	IE Controller	
CNC	Industrial Ethernet Device		IE Controller	Ethernet to HMI
Motion Controller	Industrial Ethernet Device		IE Controller	IE Controller

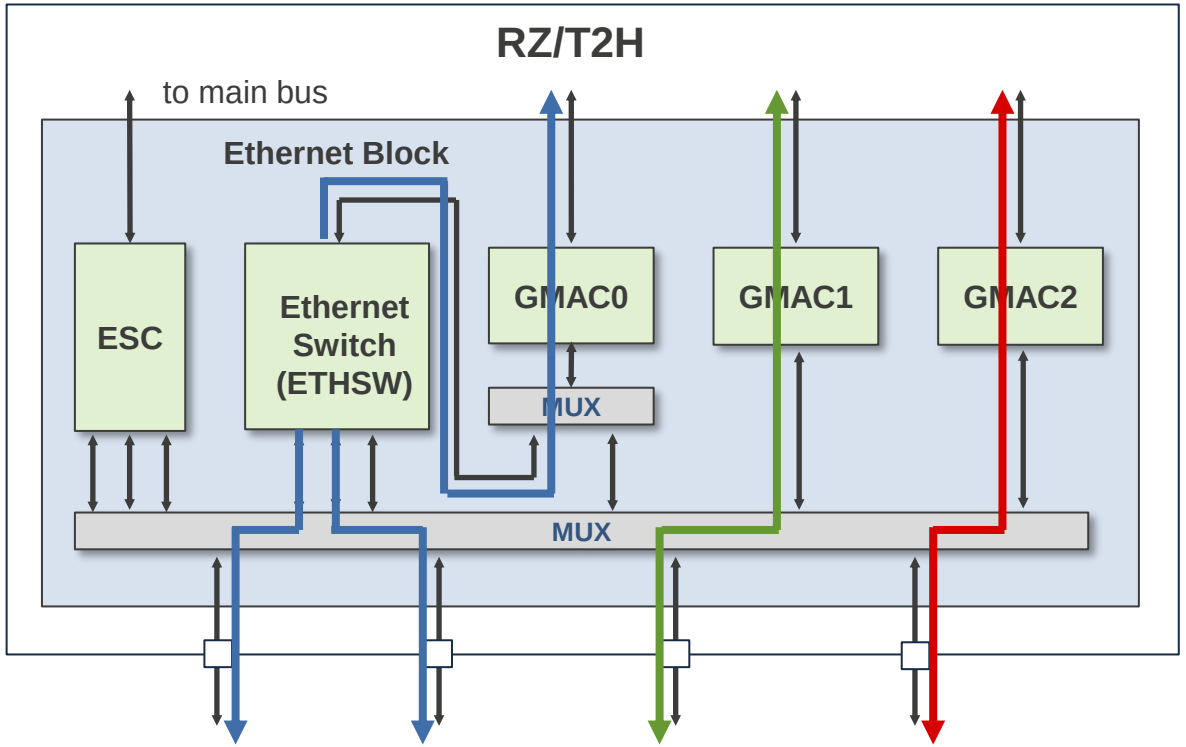

Industrial Robot proposal example

© 2024 Renesas Electronics Corporation. All rights reserved.

KEY FEATURE #3 – ETHERNET FUNCTIONALITIES PLC USE CASE

#3 Extensive Ethernet Functionalities Supporting Industrial Ethernet(IE) Controller and Device

- Ethernet functionalities in RZ/T2H
  - 4x external Ethernet ports
  - 3ch GMAC w/ TSN
  - 3 port Ethernet Switch w/ TSN
  - EtherCAT Slave Controller(ESC)
- Extensive Ethernet functionalities flexibly meet various application requirements.

Application basis proposal examples

Application	Port0	Port1	Port2	Port3
Industrial Robot	Industrial Ethernet Device		Ethernet to HMI	Ethernet for other use
PLC	**Ethernet to SCADA**	**IE Controller**	**IE Controller**	
CNC	Industrial Ethernet Device		IE Controller	Ethernet to HMI
Motion Controller	Industrial Ethernet Device		IE Controller	IE Controller

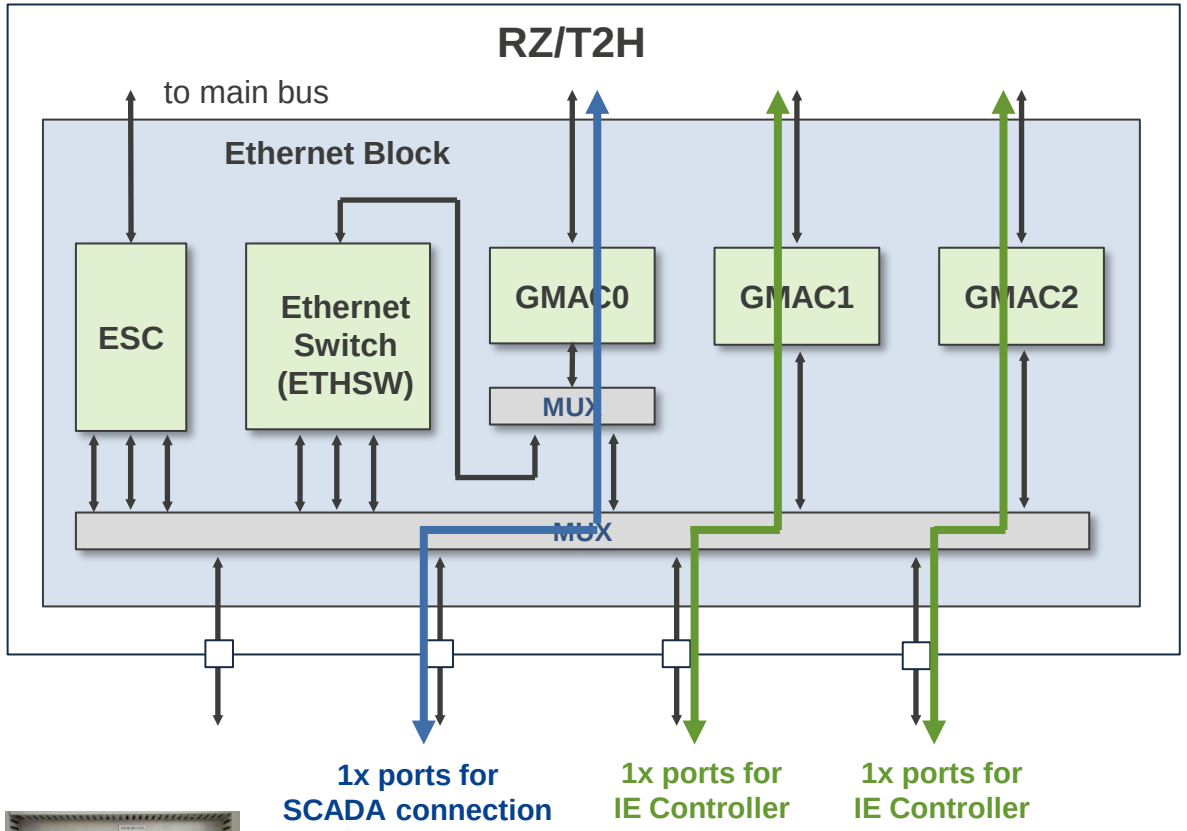

PLC proposal example

© 2024 Renesas Electronics Corporation. All rights reserved.

KEY FEATURE #3 – ETHERNET FUNCTIONALITIES CNC & MOTION CONTROLLER USE CASE

#3 Extensive Ethernet Functionalities Supporting Industrial Ethernet(IE) Controller and Device

- Ethernet functionalities in RZ/T2H
  - 4x external Ethernet ports
  - 3ch GMAC w/ TSN
  - 3 port Ethernet Switch w/ TSN
  - EtherCAT Slave Controller(ESC)
- Extensive Ethernet functionalities flexibly meet various application requirements.

Application basis proposal examples

Application	Port0	Port1	Port2	Port3
Industrial Robot	Industrial Ethernet Device		Ethernet to HMI	Ethernet for other use
PLC	Ethernet to SCADA	IE Controller	IE Controller	
CNC	**Industrial Ethernet Device**		**IE Controller**	**Ethernet to HMI**
Motion Controller	**Industrial Ethernet Device**		**IE Controller**	**IE Controller**

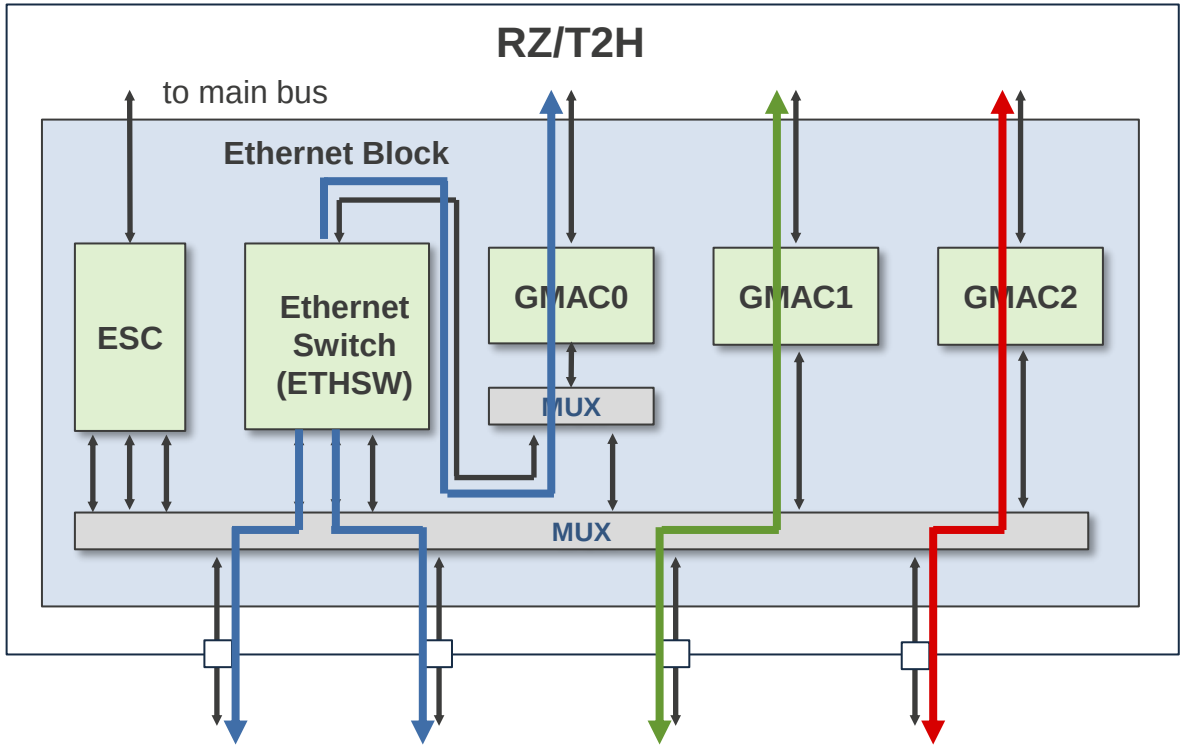

CNC and motion controller proposal example

© 2024 Renesas Electronics Corporation. All rights reserved.

KEY FEATURE #4 – ABUNDANT PERIPHERALS

#4 Abundant Peripherals and Functionalities

- High-speed communication interfaces
  - PCI Express Gen3 (up to 8.0 GT/s) 2 lanes for both Root Complex and Endpoint Applications
  - SD/eMMC host interface 2ch
  - CAN-FD 2ch
  - USB 2.0 HS Host/Function 1ch
  - xSPI 2ch supporting serial Flash and RAM such as OctaFlash/RAM and HyperFlash/RAM

- High-speed ADC with 3ch sample/hold, 3.1MSPS (=0.32us conversion time)

- LCD Controller for HMI
  - WXGA (1280 × 800) 60 fps, FHD (1920 x 1080) 30fps

- Security
  - TrustZone, Secure boot, JTAG authentication, Cryptographic accelerators and Cortex-A55 Crypto Extension

© 2024 Renesas Electronics Corporation. All rights reserved.

RZ/T2H & RZ/N2H GROUP PART NUMBERS

Series	Group	Security	Part number	Cortex-A55	Cortex-R52	MP Order
RZ/T	RZ/T2H (729FCBGA)	Secure	R9A09G077M48GBG	Quad cores	Two CPUs	Available
			R9A09G077M28GBG	Dual cores	Two CPUs	Available
			R9A09G077M08GBG	Single core	Two CPUs	Available
		Non-Secure	R9A09G077M44GBG	Quad cores	Two CPUs	Available
			R9A09G077M24GBG	Dual cores	Two CPUs	Available
			R9A09G077M04GBG	Single core	Two CPUs	Available

Series	Group	Security	Part number	Cortex-A55	Cortex-R52	MP Order
RZ/N	RZ/N2H (576FCBGA)	Secure	R9A09G087M48GBG	Quad cores	Two CPUs	End of Dec 2024
			R9A09G087M28GBG	Dual cores	Two CPUs	End of Dec 2024
			R9A09G087M08GBG	Single core	Two CPUs	End of Dec 2024
		Non-Secure	R9A09G087M44GBG	Quad cores	Two CPUs	End of Dec 2024
			R9A09G087M24GBG	Dual cores	Two CPUs	End of Dec 2024
			R9A09G087M04GBG	Single core	Two CPUs	End of Dec 2024

© 2024 Renesas Electronics Corporation. All rights reserved.

SOFTWARE DEVELOPMENT ENVIRONMENT

© 2024 Renesas Electronics Corporation. All rights reserved.

SCALABLE & COMPATIBLE S/W PLATFORM

ENHANCE REUSABILITY OF CUSTOMER'S S/W ASSETS

- **Flexible Software Platform (FSP)** and **Linux Software Package** bring benefit of compatibility and scalability among Renesas MPU/MCU products to customers

Flexible Software Platform (FSP)

Common S/W platform for Renesas MPU and MCU, which provides configurability by GUI tool.

- **Industrial protocol**

EtherNet/IP EtherCAT Modbus DeviceNet PROFINET PROFIBUS CC-Link IE TSN CANopen

- **Realtime OS**

FreeRTOS

- **FSP BSP & HAL drivers**
  - Support GUI configuration by e2Studio

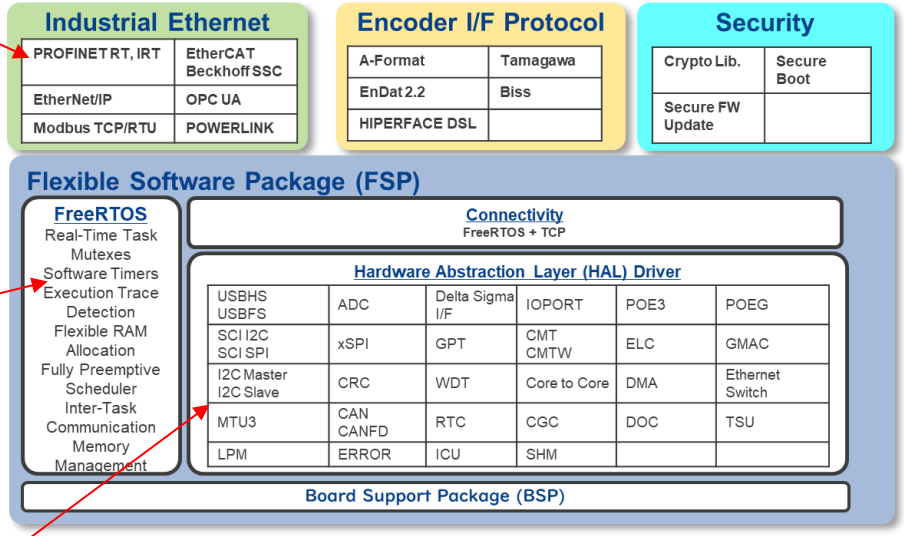

Linux Software Package

Linux S/W platform based on CIP Linux and common S/W libraries, which are verified by Renesas.

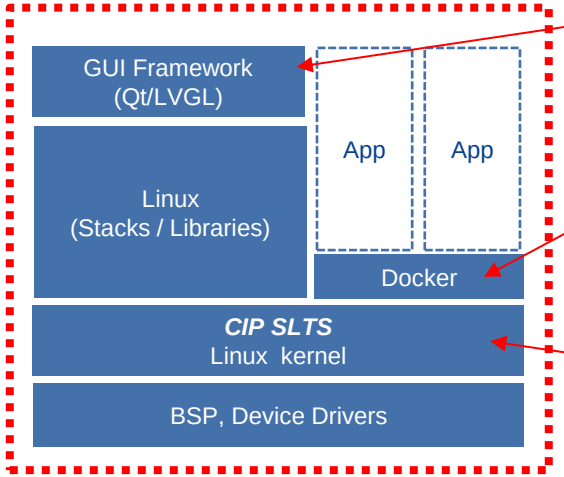

- **GUI framework**

Qt LVGL

- **Container**

docker

- **Industrial Grade Linux**

CIVIL INFRASTRUCTURE PLATFORM

* CIP SLTS : Industrial grade Linux kernel w/ SLTS (Super Long-Term Support : 10 years)

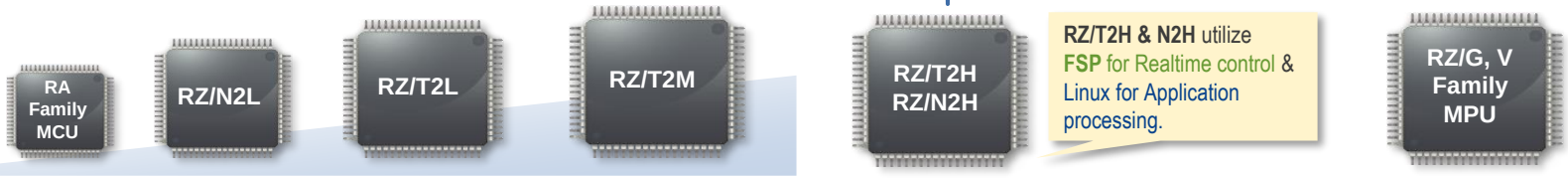

RZ/T2H & N2H utilize **FSP** for Realtime control & Linux for Application processing.

© 2024 Renesas Electronics Corporation. All rights reserved.

RENESAS

LINUX ENVIRONMENT DELIVERABLES

RZ/T2H,N2H Linux Software Image

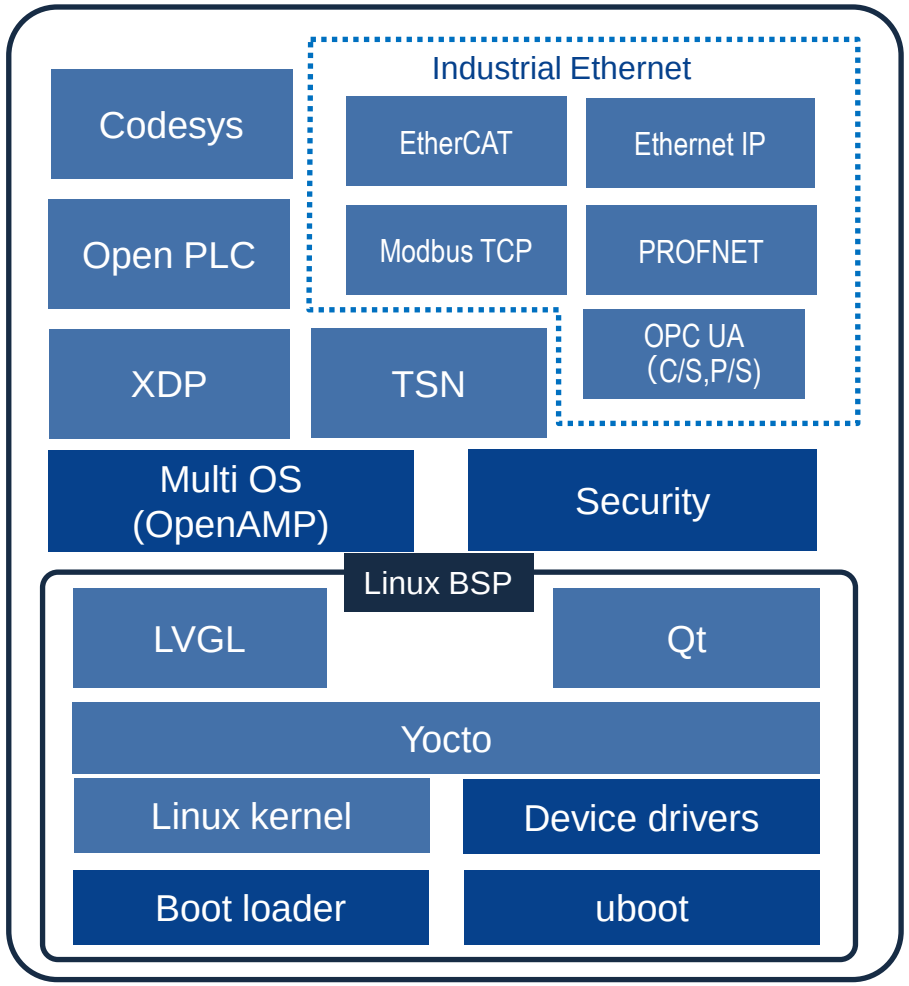

Following Linux packages and install guide are released

Package / Guide	Contents or supported protocol
Board Support Package (BSP)	Linux Kernel, Linux Drivers, LVGL, Qt
Industrial Network Package	EtherCAT, EtherNet/IP, Modbus TCP, OPC UA, PROFINET, TSN
TSN Package	gPTP, TDMA, LLDP, YANG, NETCONF
OpenPLC Package	OpenPLC
XDP Package	XDP
Codesys Install Guide	Codesys
Multi-OS Package	OpenAMP
Security Package	Security IP drivers, Secure boot, encryption/decryption APIs, ARM Trusted Firmware

OSS

Proprietary M/W or Renesas original

© 2024 Renesas Electronics Corporation. All rights reserved.

BOARD SUPPORT PACKAGE

- **Board Support Package (BSP) is software that includes device drivers, Linux kernel and bootloader, and other necessary software to run Linux on RZ/T2H(N2H) EVK.**
- **It provides basic instructions for building a Linux environment.**

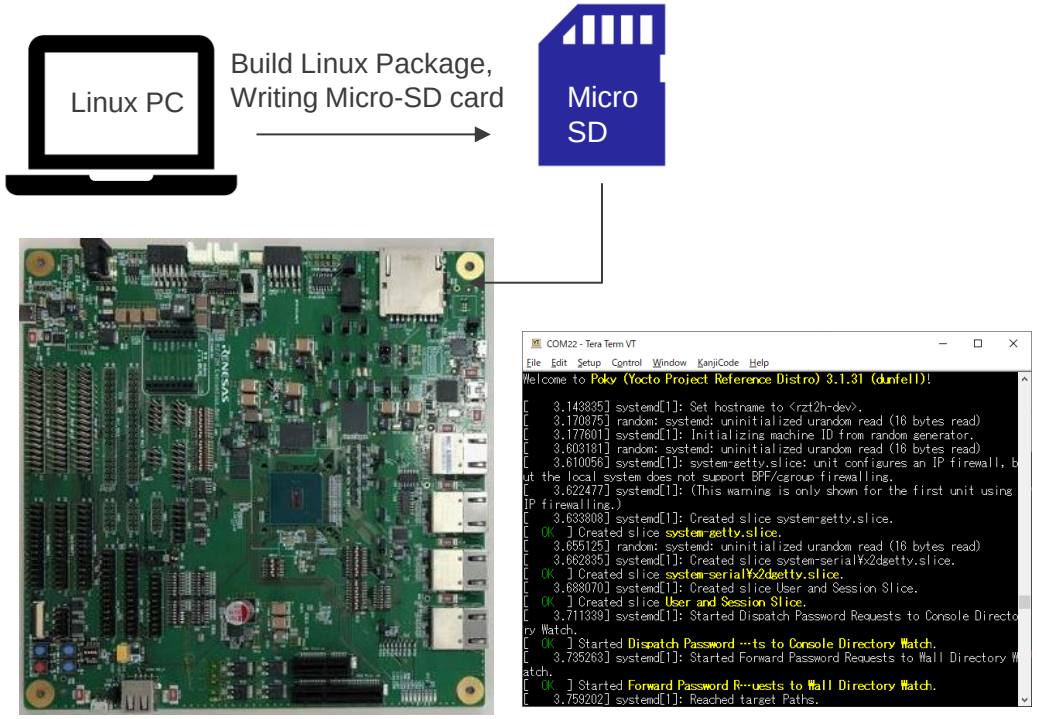

BSP environment	Support
Kernel / Yocto	**5.10 CIP / Dunfell**
Supported Boot from	**SD, eMMC, OSPI**
GUI Framework	**LVGL, Qt**

- Device Drivers

Items	Device Drivers
CPU	Cortex-A55
External Memory	DDR
Timer	RTC, CMTW, GTM, GPT, MTU3, WDT
Analog	ADC
Interface	xSPI, SD/MMC, PCIe RC, USB2.0 Host/Func, GbEther(TSN), I2C, RSCI, SCIF, RSPI, CAN-FD, GPIO, LCDC, EtherSwitch, CANFD,
System	DMAC, Interrupt Controller, Power Management, TSU

© 2024 Renesas Electronics Corporation. All rights reserved.

INDUSTRIAL NETWORK PACKAGE

- Industrial Network Package provides how to implement following open-source for industrial Ethernet.
- Customer can evaluate communication operation of each protocol and start development.

Protocol	OSS (Controller)	OSS (Device)	Description
EtherCAT	IgH-EtherCAT Controller	-	Create EtherCAT controller application and communicate in 1ms cycle by connecting RZ/T2M-MOTOR-SOLUTION-KIT as EtherCAT device.
OPC UA	Open62541	Open62541	Connect RZ/T2H(N2H) to each other and establish OPC UA connection with one side as a server and the other side as a client. Also includes information on how to create/validate certificates using OpenSSL.
Modbus TCP	libmodbus	libmodbus	Connect RZ/T2H(N2H) to each other and establish a TCP connection. Confirms successful communication by exchanging PSH and ACK messages between controller and device.
EtherNet/IP	-	OpENer	Demonstrate how to establish an EtherNet/IP connection with Codesys (Scanner) running on PC.
PROFINET	-	P-Net	Demonstrate how to establish a PROFINET connection with Codesys (Controller) running on Raspberry Pi.

© 2024 Renesas Electronics Corporation. All rights reserved.

TSN PACKAGE

- Time-Sensitive Network (TSN) Package allows customers to confirm each protocol communication with open source TSN related stacks.

Supported TSN stacks and OSS

Stack	OSS (Controller)	OSS (Device)	descriptions
gPTP	LinuxPTP	LinuxPTP	Connect RZ/T2H(N2H) boards each other. Create conf file for controller and device and communicate with each other. Confirm communication with gPTP protocol from the log. Also, confirm that communication protocol packets by Wireshark.
LLDP	lldpd	lldpd	Connect RZ/T2H(N2H) boards each other. Execute LLDP command and check log to confirm that communication is being made using the LLDP protocol. Also, confirm that communication protocol packets by Wireshark.
YANG NETCONF	libyang libnetconf2	libyang libnetconf2	Connect RZ/T2H(N2H) boards each other. After executing commands for communication, confirm that communication is taking place using YANF/NETCONF. Also, confirm that communication protocol packets by Wireshark.
EAP	Freeradius	Freeradius	Connect RZ/T2H(N2H) boards to each other. Set up config file to check EAP communication and confirm communication. Also, confirm that communication protocol packets by Wireshark.

© 2024 Renesas Electronics Corporation. All rights reserved.

OPENPLC PACKAGE

- OpenPLC Package guides users to install OpenPLC Runtime to Linux environment.
- Customer can easily build OpenPLC environment running on RZ/T2H with this package.

OpenPLC is an open-source programmable logic controller (PLC) platform.
PLCs are devices used in industrial control applications and are programmed to control a variety of sensors and actuators.

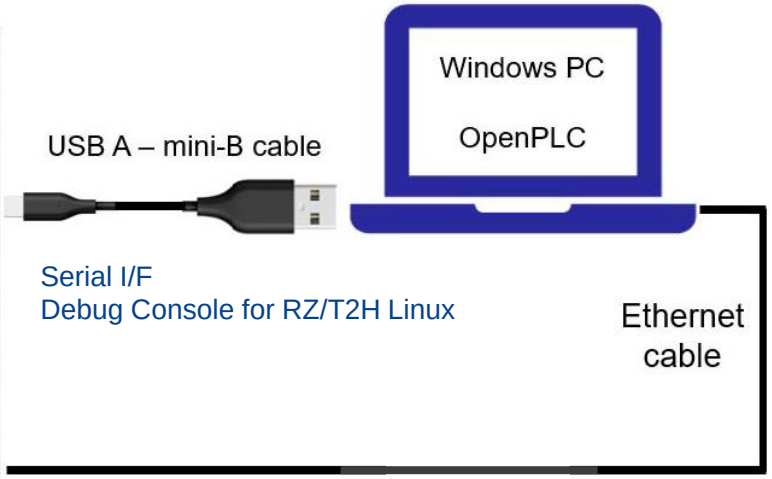

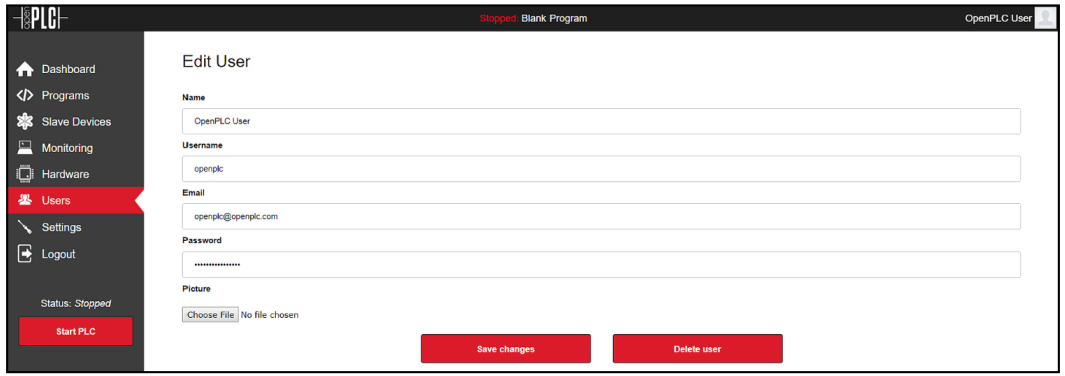

OpenPLC runtime

Install OpenPLC Runtime on evaluation board
1. git clone and install OpenPLC directly on RZ/T2H, N2H
2. Start the Web server and check the OpenPLC runtime from a PC browser.

© 2024 Renesas Electronics Corporation. All rights reserved.

CODESYS INSTALL GUIDE

- CODESYS is widely used in Software PLCs compliant with IEC 61131-3, the international standard for PLC programming language. Codesys Install Guide provides guidance to install Codesys Runtime to Linux environment.
- Customers can easily set up Codesys environment running on Linux for RZ/T2H or N2H.

*** CODESYS is Software PLC/Motion/HMI provided by CODESYS GmbH**

IDE for Windows

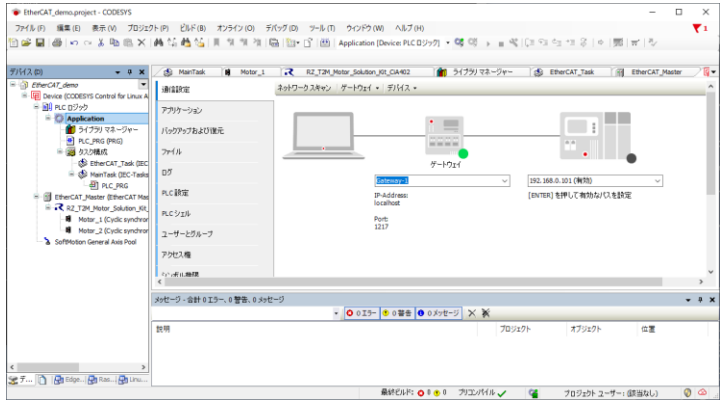

Codesys Runtime

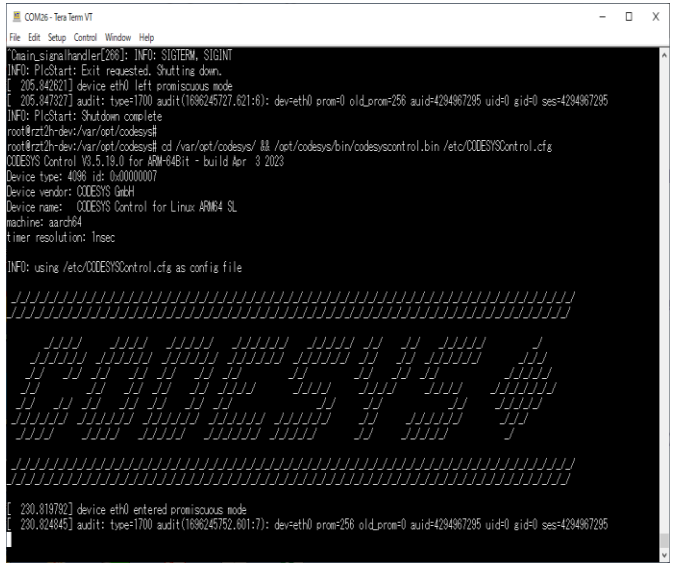

© 2024 Renesas Electronics Corporation. All rights reserved.

XDP PACKAGE

- XDP package provides how to implement XDP on Linux environment for RZ/T2H, N2H and a working example.
- This package is used to enhance Ethernet communication performance on Linux.

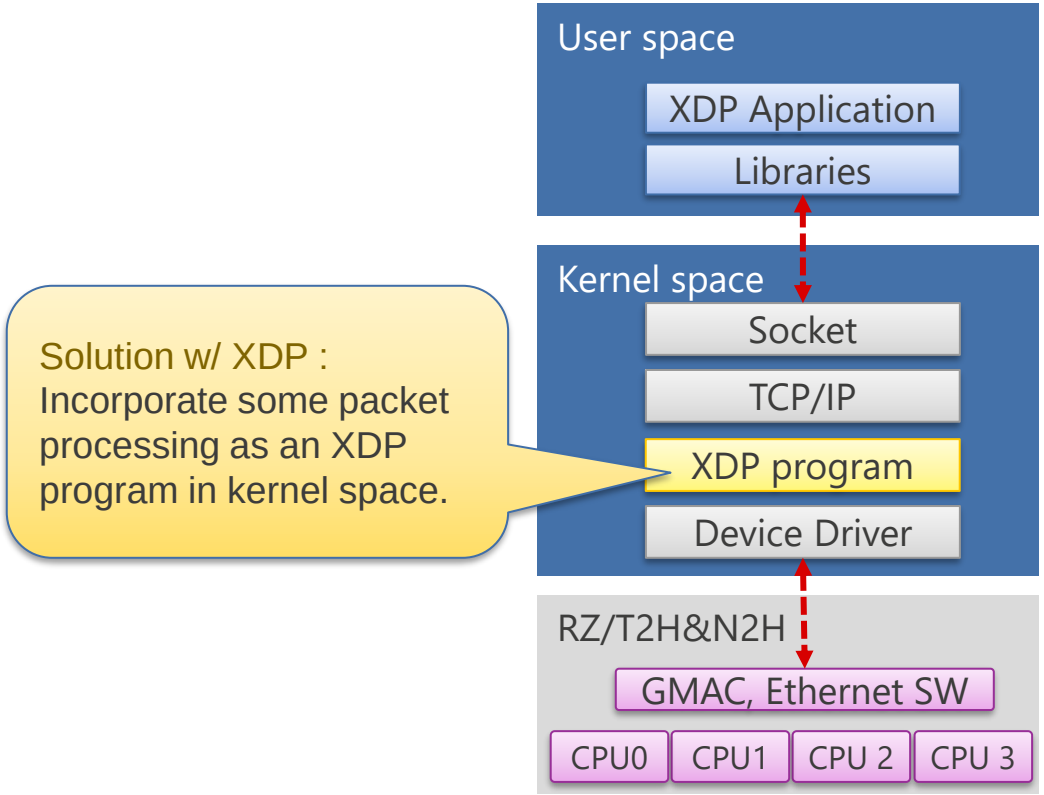

XDP can reduce number of context switches.
The effect is more obvious in smaller size data transfer.

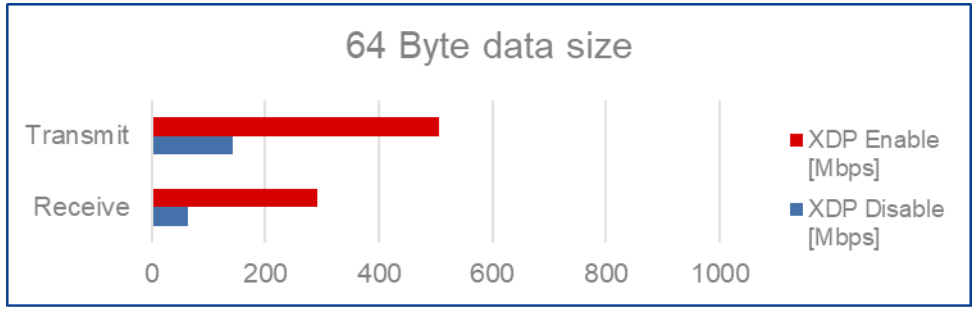

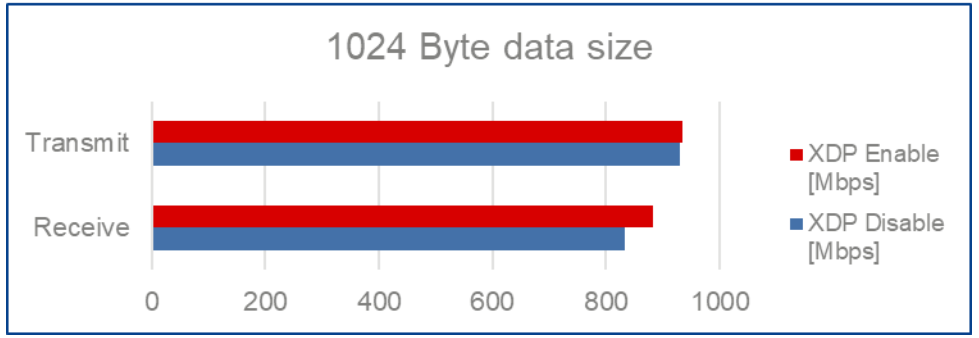

© 2024 Renesas Electronics Corporation. All rights reserved.

MULTI-OS PACKAGE

- Multi-OS package provides multi-OS environment and sample program showing how to implement Inter-Processor Communication with OpenAMP.
- Data can be exchanged via shared memory (SystemRAM) in different environments (Linux, RTOS, and Baremetal).
- This sample software can be applied easily to build an environment in which each core runs a different OS and communicates data.

Multi-OS Package

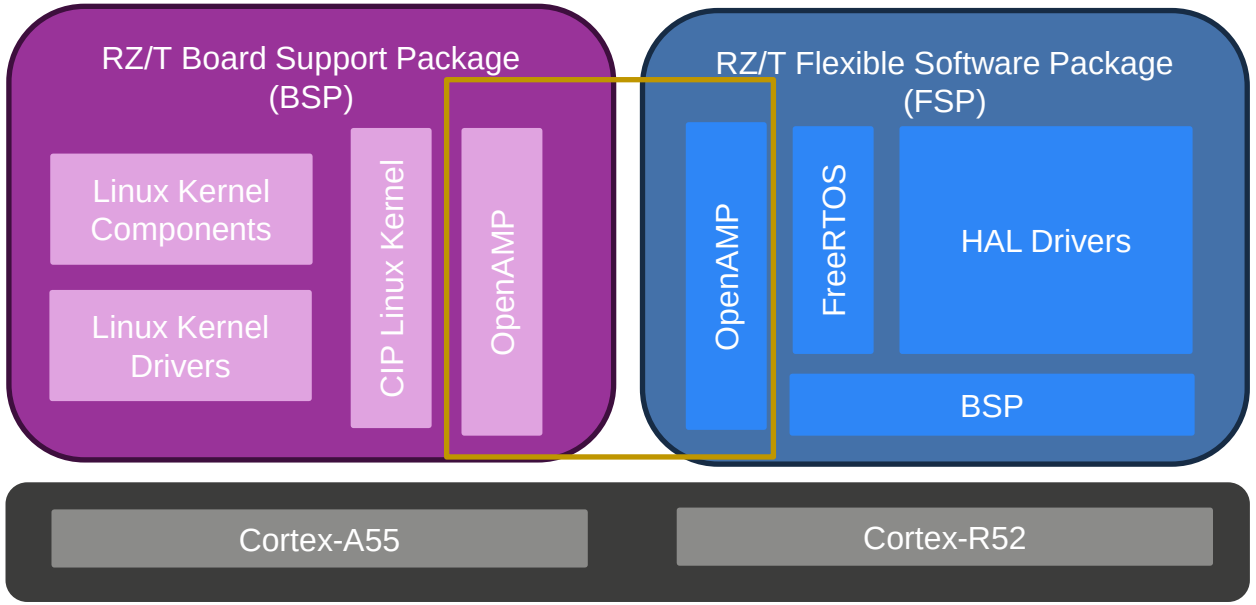

***OpenAMP is standardization API of framework for inter-processor communication.**

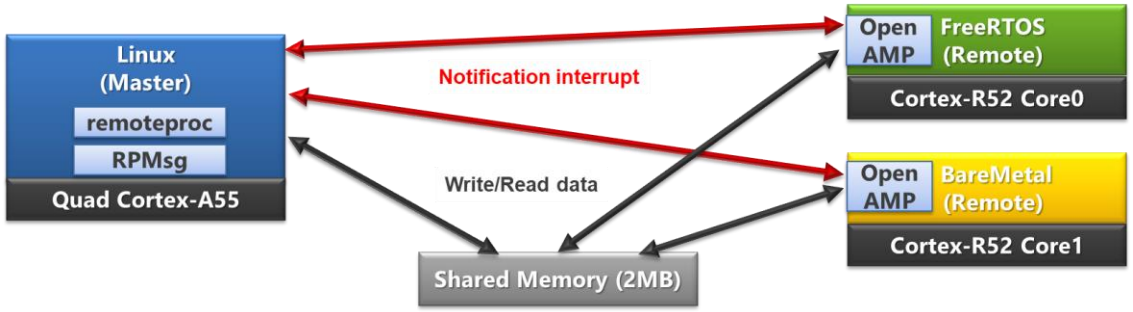

© 2024 Renesas Electronics Corporation. All rights reserved.

FSP and Other Software

- Provides FSP that can generate FreeRTOS code and hardware driver
- Provides Industrial Ethernet protocol stacks, encoder I/F protocols, and security solutions

Industrial Ethernet

EtherCAT Beckhoff SSC	EtherNet/IP
PROFINET RT, IRT	lwIP
Modbus TCP/RTU	

Encoder I/F Protocol

A-Format	Tamagawa
EnDat 2.2	Biss
HIPERFACE DSL	

Security

Crypto Lib.	Secure Boot
Secure FW Update	

Flexible Software Package (FSP)

FreeRTOS

Real-Time Task
Mutexes
Software Timers
Execution Trace Detection
Flexible RAM Allocation
Fully Preemptive Scheduler
Inter-Task Communication
Memory Management

Connectivity
FreeRTOS + TCP

Hardware Abstraction Layer (HAL) Driver

USBHS USBFS	ADC	Delta Sigma I/F	IOPORT	POE3	POEG
SCI I2C SCI SPI	xSPI	GPT	CMT CMTW	ELC	GMAC
I2C	CRC	WDT	Core to Core	DMA	Ethernet Switch
MTU3	CAN CANFD	RTC	CGC	DOC	TSU
LPM	ERROR	ICU	SHM		

Board Support Package (BSP)

- BSP for evaluation board
- HAL Drivers for peripherals
- FreeRTOS support
- FreeRTOS + TCP
- USB & Ethernet stack
- Software/Hardware security
- Industrial network protocol
- FreeRTOS + FAT file system

© 2024 Renesas Electronics Corporation. All rights reserved.

FSP Smart Configurator (FSP SC)

Operating Image of Code Generation

Ex. Code generation

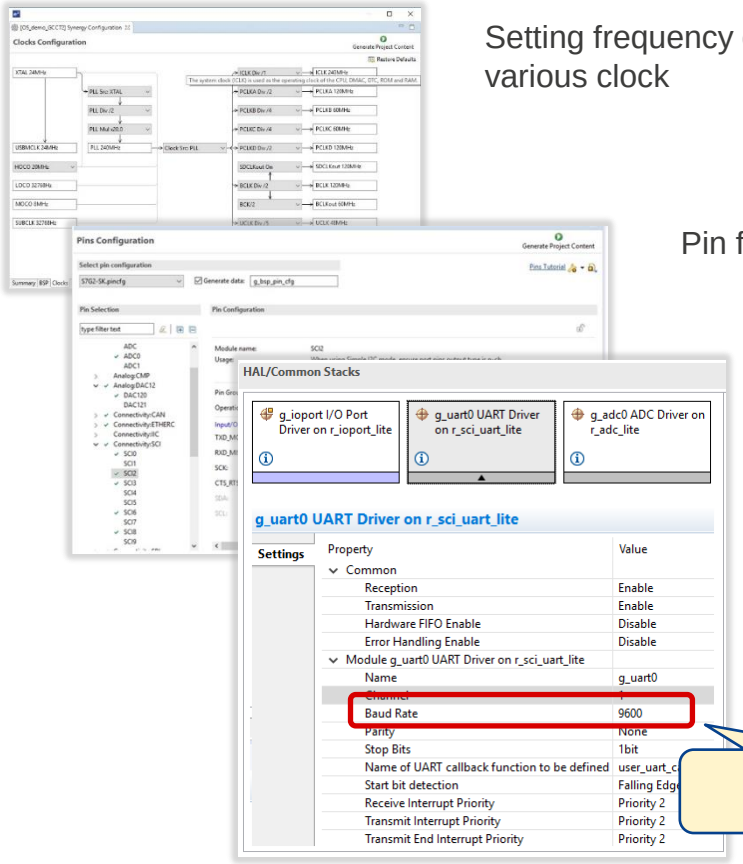

Setting frequency of various clock

Pin function setting

Configuration of HALdriver

Setting baud rate

Generate Code

Ex. hal_data.c

```
/* generated HAL source file - do not edit */
#include "hal_data.h"
#if (SCI_UART_CFG_RX_ENABLE)
#if (2) != BSP_IRQ_DISABLED
#if !defined(SSP_SUPPRESS_ISR_g_uart0) && !defined(SSP_SUPPRESS_ISR_SCI0)
SSP_VECTOR_DEFINE_CHAN(sci_uart_rxi_isr, SCI, RXI, 0);
#endif
#endif
#if (SCI_UART_ERROR_HANDLING_ENABLE)
#if (BSP_IRQ_DISABLED) != BSP_IRQ_DISABLED
#if !defined(SSP_SUPPRESS_ISR_g_uart0) && !defined(SSP_SUPPRESS_ISR_SCI0)
SSP_VECTOR_DEFINE_CHAN(sci_uart_eri_isr, SCI, ERI, 0);
#endif
#endif
#endif

sci_uart_instance_ctrl_t g_uart0_ctr

/** UART interface configuration */
const uart_cfg_t g_uart0_cfg =
{ .channel = 0, .baud_rate = 9600, .parity = UART_PARITY_OFF, .stop_bits
        user_uart_callback,
  .p_context = &g_uart0, .rx_edge_start = true, .rxi_ipl = (2), .txi_ipl
        (BSP_IRQ_DISABLED), };

/* Instance structure to use this module. */
const uart_instance_t g_uart0 =
{ .p_ctrl = &g_uart0_ctrl, .p_cfg = &g_uart0_cfg,
#if(BSP_CFG_INTERFACE_API_ENABLE)
  .p_api = &g_uart_on_sci_lite
#else
  .p_api = NULL
#endif
```

The set baud rate is reflected in the code

Generated code(include hal_data.c)are stored in following two folders

rzt_gen/

rzt_cfg/

© 2024 Renesas Electronics Corporation. All rights reserved.

INDUSTRIAL ETHERNET SOLUTION FOR RZ/T2H AND N2H

Protocol	Linux (Cortex-A55)		RTOS (Cortex-R52)
	Controller	Device	Device
EtherCAT	IgH-EtherCAT	-	Slave Stack Code (generated by SSC tool)
EtherNet/IP	-	OpENer	OpENer
PROFINET RT	-	P-Net	Under Planning
OPC UA	Open62541	Open62541	-
Modbus TCP	libmodbus	libmodbus	Made by Renesas

© 2024 Renesas Electronics Corporation. All rights reserved.

SECURITY SOLUTION

Security Solution are provided separately for RTOS/BareMetal and Linux

Features		Deliverables	RTOS/BareMetal	Linux
Secure Boot		Sample	Yes	Yes
Secure Update		Sample	Yes	Yes
Secure Debug		Guide for OTP	Yes	Yes
Cryptographic support	Security IP (Renesas IP)	Driver	Yes	Yes
	ARMv8 Cryptography Extensions (Cortex-A features)	Guide for enabling	-	Yes
Access Control (Trust Zone)		Sample	-	Yes

© 2024 Renesas Electronics Corporation. All rights reserved.

RZ/T2H, N2H EVALUATION BOARD KIT

Part #	Name	Description	Link
RTK9RZT2H0S00000BJ	RZ/T2H-EVKIT	A general-purpose board kit for evaluating the operation of software for RZ/T2H functionalities	RZ/T2H-EVKIT - Evaluation Board Kit for RZ/T2H | Renesas
RTK9RZN2H0S00000BJ	RZ/N2H-EVKIT	A general-purpose board kit for evaluating the operation of software for RZ/N2H functionalities	RZ/N2H-EVKIT - Evaluation Board Kit for RZ/N2H | Renesas

Ready for immediate evaluation of each functions

- Segger's **on-board debugger** allows S/W development via USB cable easily.
- IDE **e2studio** and various sample S/W can be downloaded from Renesas website.
- Boot modes: **On-board xSPI Flash boot, USB boot, eSD boot, eMMC boot, and SCI boot.**
- **4 ports of Ethernet connectors**
- By connecting **RZ/T2H EVK** to **RZ/T Series Inverter Board** and running sample S/W, Motor Control can be evaluated immediately.
- Octa Flash : 512 Mbits, QSPI Flash : 128Mbits, EEPROM 16kbits, eMMC : 32 Gbytes
- **LPDDR4 : 8Gbytes**
- **PCIe** 1 lane 2ports or 2 lanes 1port
- SD slot x1, micro SD slot x1
- General-purpose interfaces such as PMOD, mikroBUS, Qwiic and Grove
- Power Supply : USB PD type-C 15V/3A DC or 2.0mm jack 15V/3A DC or 5.08mm terminal block 24V/3A DC

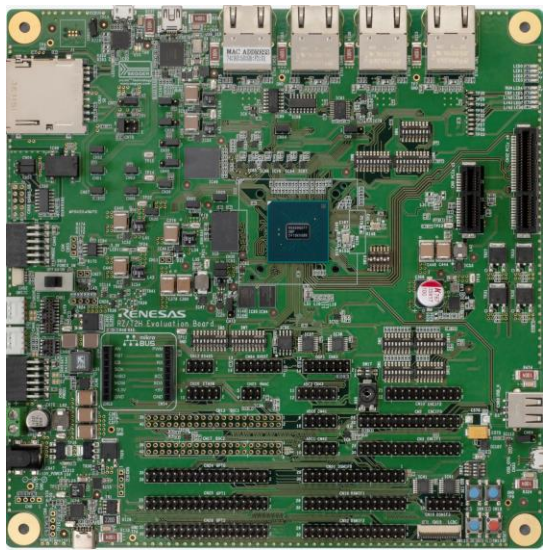

RZ/T2H Evaluation Board (RTK9RZT2H0S00000BJ)

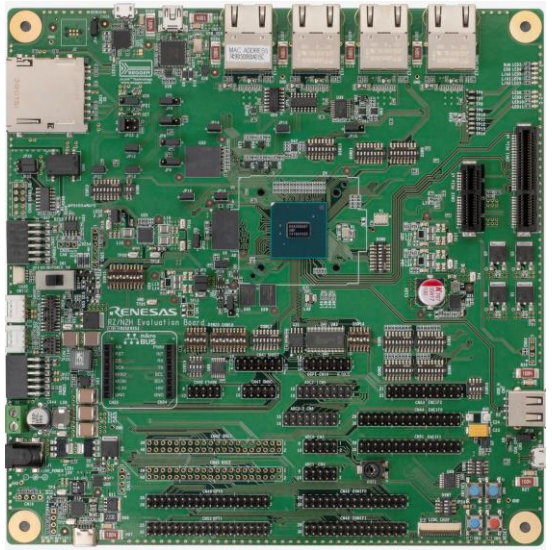

RZ/N2H Evaluation Board (RTK9RZN2H0S00000BJ)

© 2024 Renesas Electronics Corporation. All rights reserved.

RZ/T SERIES INVERTER BOARD

	Part #	Name	Title	Description	Link
(1)	RTK0EM0000B15010BJ	INVB-LV-RZT-I	RZ/T Series Inverter Board	A set of Inverter board and Cable to connect to EVK-RZ/T2H or N2H	RTK0EM0000B15010BJ - RZ/T Series Inverter Board | Renesas
(2)	RTK0EM0000S05010BJ	INVB-LV-RZT-IM	RZ/T Series Inverter Board Kit	A bundled set (1) with BLDC motor (for 1 axis)	RTK0EM0000S05010BJ - RZ/T Series Inverter Board Kit | Renesas
(3)	RTK0EM0000Z03000BJ	BUSB-RZT2H-B	Bus Board for RZ/T2H	Board for binding inverter boards (up to 9 axes) and connecting them to EVB-RZ/T2H	RTK0EM0000Z03000BJ - Bus Board for RZ/T2H | Renesas

Configuration for use

【 An inverter board is directly connected to CPU board 】

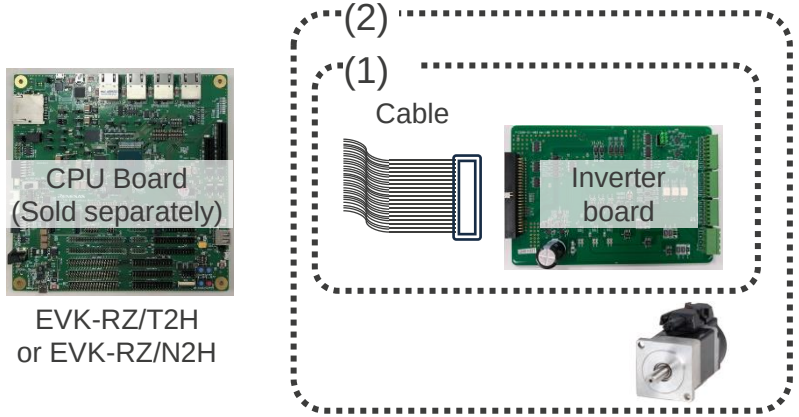

・Inverter Board
・Connection cable
・BLDC motor

【 Connect multiple inverter boards to CPU board via Bus board 】

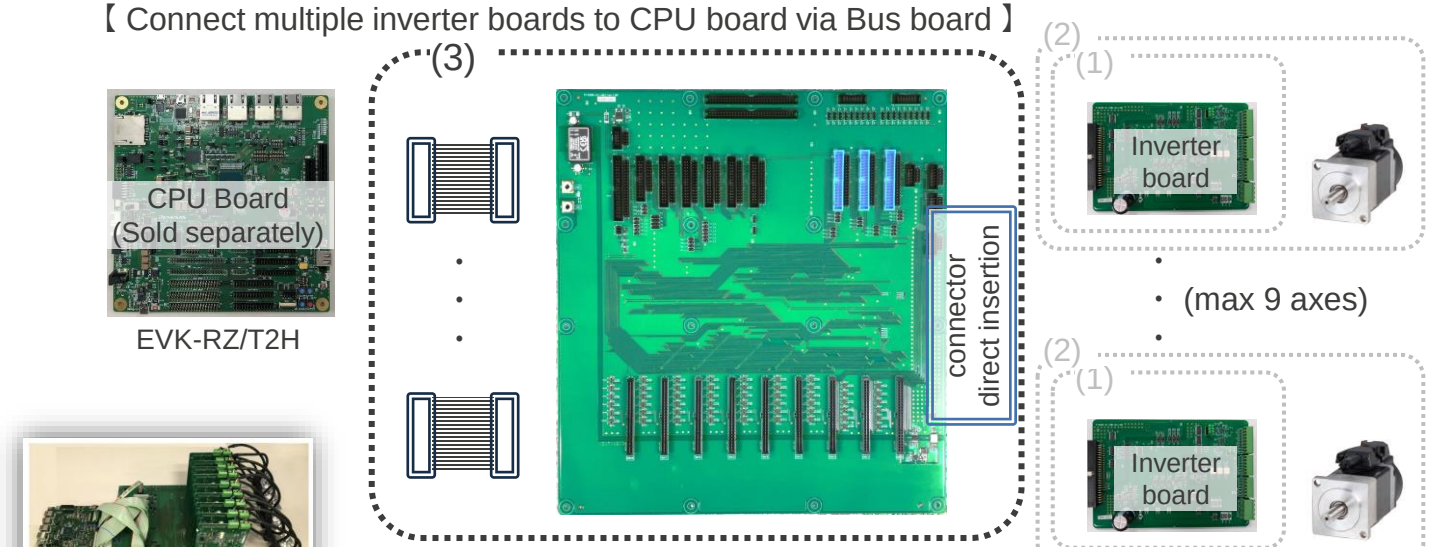

・Bus board
・Connection cable to EVK-RZ/T2H

© 2024 Renesas Electronics Corporation. All rights reserved.

9-AXIS MOTOR CONTROL DEMONSTRATION

9-axis motor control demonstration available!

- ✓ 9 motors speed and position controllable via PC tool.
- ✓ Demo environment other than Renesas boards
  - ✓ 24V AC Servo Motor x9
  - ✓ FA-CODER 17bit encoder @2.5MHz x9
  - ✓ Carrier Frequency 20kHz

Video : RZ/T2H 9-Axis Motor Control Demo | Renesas

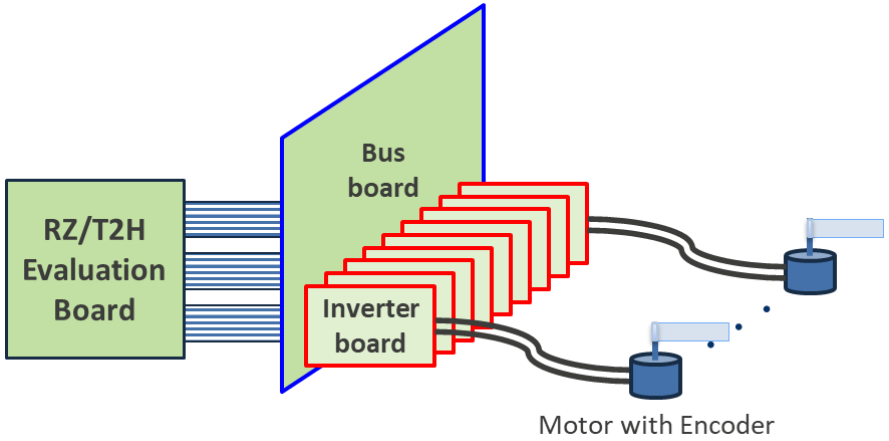

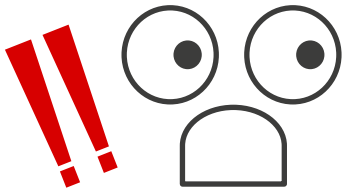

9 motors controlled by single RZ/T2H!

© 2024 Renesas Electronics Corporation. All rights reserved.

SUPPORT TOOLCHAIN

	FreeRTOS/Baremetal (CA55/CR52)		Linux (CA55)
IDE	**IAR EWARM**	**Renesas e²studio**	-
Compiler	IAR C/C++ Compiler	GCC	GNU Toolchain for the Cortex-A Family (GNU-A)
ICE	IAR I-jet ICE IAR I-jet Trace	Segger J-Link J-Link OB	-
FSP	FSP Smart Configurator (Stand-alone)	Smart Configurator (e²studio Integration)	Smart Configurator for RZ
Evaluation kit	RZ/T2H Evaluation board (RTK9RZT2H0S00000BJ)		

© 2024 Renesas Electronics Corporation. All rights reserved.

S/W DEVELOPMENT ENVIRONMENT& SOLUTIONS OVERVIEW

DEVELOPMENT ENVIRONMENT / SOLUTION TO SUPPORT CUSTOMER PRODUCT DEVELOPMENT

S/W & Solution

WINNING COMBOS

WS045

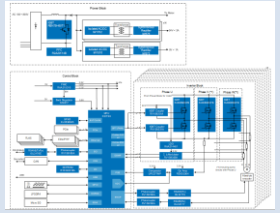

RTOS & Baremetal Solutions for CR52 and CA55

- ✓ FSP BSP & HAL drivers & example program
- ✓ Industrial Ethernet Solution
- ✓ Motor Control Solution *Only CR52

PROFINET, EtherNet/IP, EtherCAT, OPC UA, Modbus TCP

Tool

IDE & Tools*

- ✓ **Linux Solutions for CA55** (CIVIL INFRASTRUCTURE PLATFORM)
  - ✓ CIP Linux BSP
  - ✓ Industrial Network Package
  - ✓ Multi-OS Package
  - ✓ XDP Package

H/W & Kit

EVK

Inverter Board

- ✓ **FSP Smart Configurator**

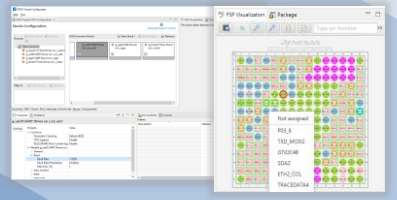

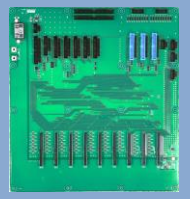

Bus Board

- ✓ **Pin Configurator for Linux**

Security solution

- ✓ Secure boot
- ✓ Secure FW update
- ✓ JTAG Authentication
- ✓ TrustZone

Device

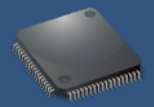

RZ/T2H, RZ/N2H

LSI Document

- ✓ RZ/T2H&N2H HW User's Manual
- ✓ RZ/T2H&N2H Data Sheet

*Including those provided by partner companies

© 2024 Renesas Electronics Corporation. All rights reserved.

RENESAS

WINNING COMBINATION

© 2024 Renesas Electronics Corporation. All rights reserved.

WS045 9-AXIS INDUSTRIAL MOTOR CONTROL WITH ETHERNET

System Overview

Renesas provides the total solution required for 9-axis motor control with an MPU, power supply ICs, delta-sigma (ΔΣ) modulator and other devices. The combination of these devices enables a simple and high-performance solution for robots and motion controllers, and industrial network.

System Benefits

- A high-precision system is configured by combining the MPU (RZ/T2H) and peripheral devices and reducing the number of external parts
  - Dual Cortex-R52 core of MPU realizes high-precision motor control and industrial Ethernet communication
  - Provides high-precision current sensing with the MPU's ΔΣ interface and ΔΣ modulator, and supports various encoders with an MPU encoder interface and RS-485
  - Quad Cortex-A55 core of MPU perform advanced arithmetic processing such as trajectory formation for 9-axis motor control.
- Supports major industrial Ethernet protocols (EtherCAT, Ethernet/IP, PROFINET IRT, OPC UA, etc.) with a simple configuration using few external components
- Simply build a functional safety system with an MPU (RZ/T2H) and one MCU for mutual monitoring
- Provides reference circuit and various sample programs

Target Applications

- AC servo motors
- Industrial robots
- Motion Controller

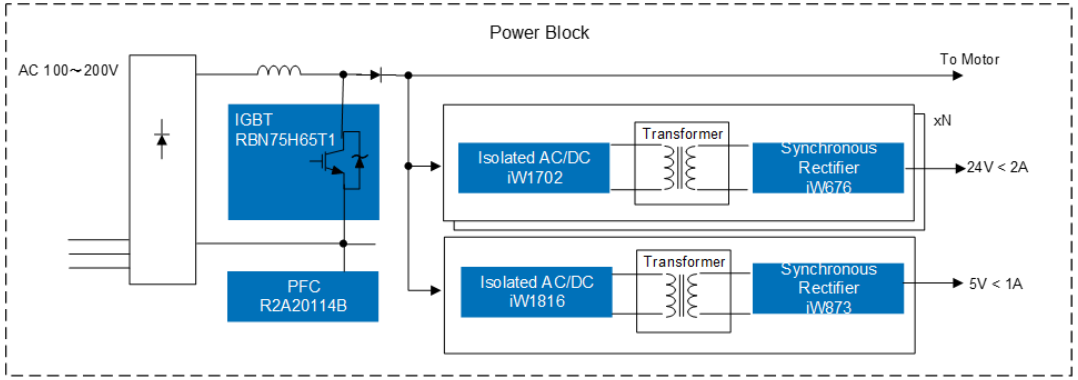

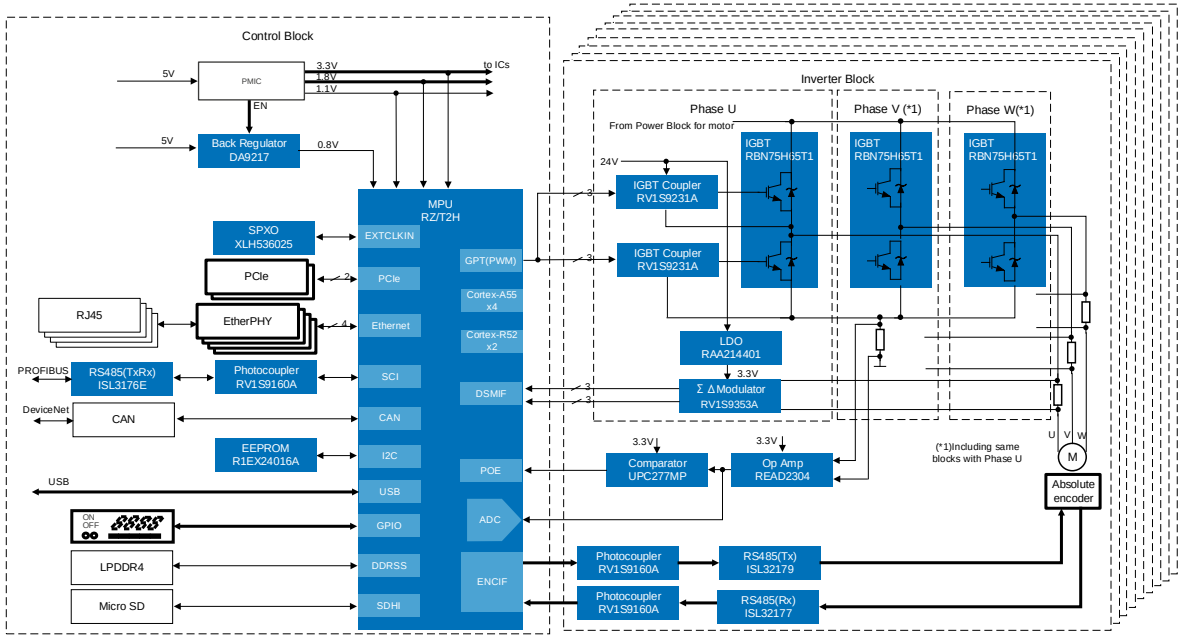

© 2024 Renesas Electronics Corporation. All rights reserved.

CROSS-SELLING OPPORTUNITIES - WINNING COMBO

WS045 9-AXIS INDUSTRIAL MOTOR CONTROL WITH ETHERNET

Category	P/N	Key Features EP
EP	RZ/T2H	64-Bit & 32-Bit Arm®-Based High-End MPUs, Real-time control + Industrial Ethernet
Analog	RV1S9160A	High-speed CMOS Output Photocouplers
	RBN75H65T1	IGBT 650V 75A TO-247A Built-In FRD
	RV1S9231A	IGBT Gate Drive Photocouplers
	RV1S9353A	Optically Isolated ΔΣ Modulator
	ISL3176	High ESD Protected RS-485/RS-422 Transceivers
	READ2304	6MHz GBW Dual OPAMP
	UPC277MP	Small Package Single Power Supply Dual Comparator
	ISL32179	Quad, ±16.5kV ESD Protected, 3.0V to 5.5V, Low Power, RS-422 Transmitters
	ISL32177	QUAD, ±16.5kV ESD Protected, 3.0V to 5.5V, RS-485/RS-422 Receivers
	XLH536025	Standard Clock Oscillators 25MHz
	R1EX24016A	Two-wire serial interface 16k EEPROM (2-kword × 8-bit)
Power	iW1816-20-SO7	PWM Converter with 800V Bipolar Power Transistor
	iW1702-00B	45W Digital AC/DC PWM Controller Optimized for 9V+ Applications
	DA9217	Configurable, 6A Dual-Phase SubPMIC
	RBN75H65T1FPQ-A0	IGBT 650V 75A TO-247A Built-In FRD
	R2A20114BFP	Continuous Conduction Mode Interleaving PFC Control IC
	iW676	Digital Synchronous Rectifier
	iW873	Digital Synchronous Rectifier
	RAA214401	150mA Wide Input Range Ultra Low Quiescent Current Linear Regulator
	RAA211650	60V 5A Integrated Switching Regulator

© 2024 Renesas Electronics Corporation. All rights reserved.

SUMMARY

© 2024 Renesas Electronics Corporation. All rights reserved.

SUMMARY

- **RZ/T2H and RZ/N2H is the best MPU for high-end industrial automation applications including but not limited to industrial robots and IA controller applications such as PLC, DCS, CNC and motion controller.**

1. Integration of **powerful application processing** by 4xCA55 and **Precise real-time control** by 2xCR52
2. Full set of peripherals for **multi-axis motor control up to 9 axes with RZ/T2H, up to 6 axes with RZ/N2H**
3. Extensive Ethernet functionalities supporting **Industrial Ethernet controller and device**

© 2024 Renesas Electronics Corporation. All rights reserved.

Renesas.com

© 2024 Renesas Electronics Corporation. All rights reserved.