<GLIGHT> <MAIN BOARD>

PAGE	TITLE
1	01.Cover
2	02.System_Block
3	03.INPUT_PD_Controller_Part
4	04.BUCK_FOR_HMD
5	05.Wireless_charger_R
6	06.Wireless_charger_L
7	07.Revision
8	<8.N/A>
9	<9.N/A>
10	<10N/A>
11	<11N/A>
12	<12N/A>
13	<13N/A>
14	<14N/A>
15	<15N/A>
16	<16N/A>
17	<17N/A>
18	

1. 圖 SCH Y 標示：(模型 適 用)
 ○圖 使 用 SS- 標準(圖)的 1(圖) 所 用 標準
 ○ 再生 材料 - 被製造材料必須與圖 或 圖 的 圖 也 使用 UL的 認識 或 有
2 . 符合圖 內 (合同)所 用 管 理 圖 或 標 準 及 的 要求, 但 不 限 于:
 圖 RoHS2. 0
 圖 REA 標 求
 圖 CP 標 求
 圖 足 无 合 要 求
 不含有 氯 素 二 甲 醚

AV R&D

Designer	<Zhongxian Su>	Date	Tuesday, December 10, 2024
Check:	<Bingkun Su>	Date	2023-07-02
Approved	<Xian Xiao>	Date	2023-07-03
Model No:	<Model No>	Sch Ver	MOKU_SCH_FROM_TONLY_VERSION_A20231219
Title	<Page Name>	PCB Ver	40-XXXXXX-XXXXX>	Sheet: 1 of 7

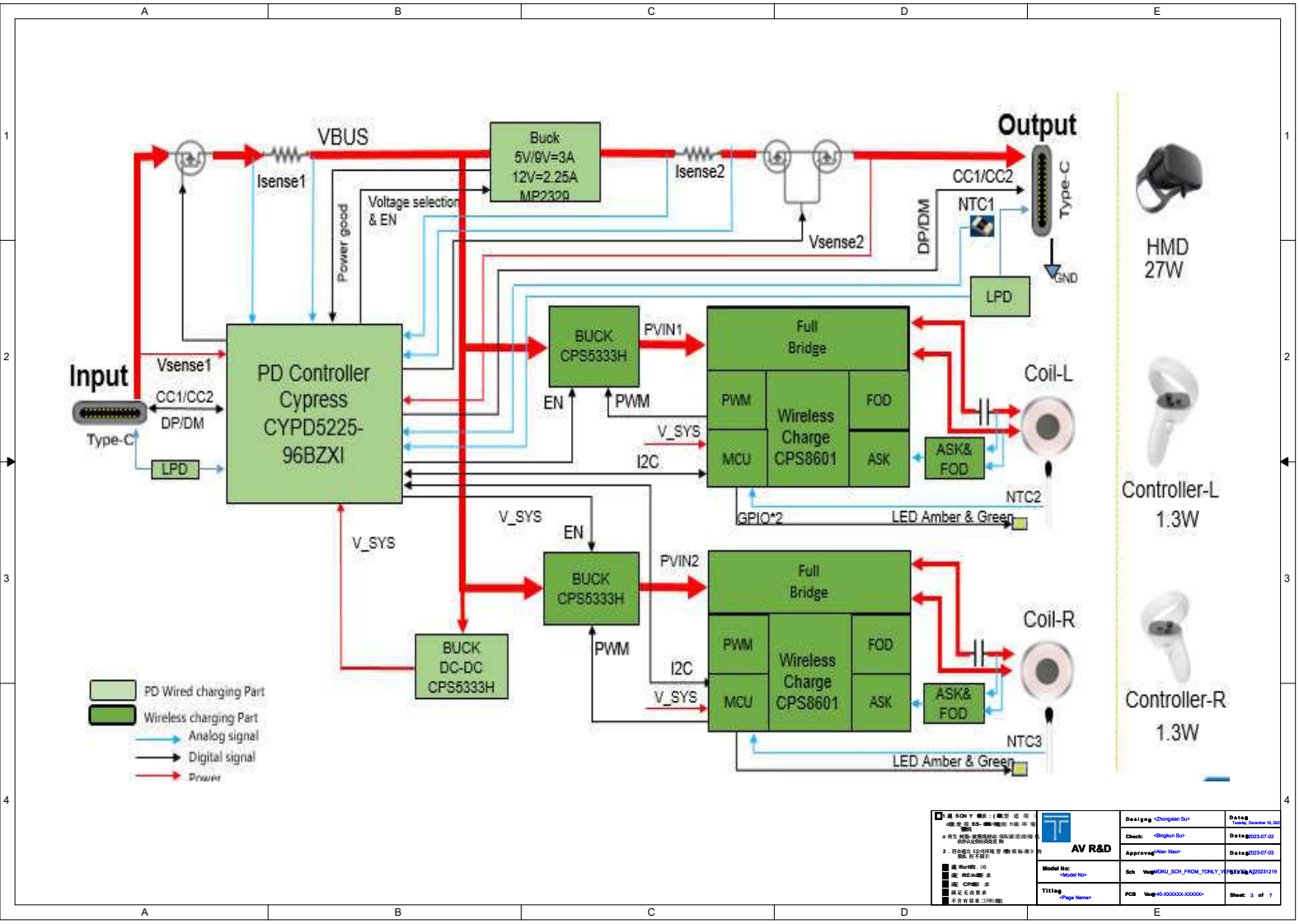

AV R&D	Designg <Zhongxian Su>		Dateg Tuesday, December 19, 2023
	Check: <Bingkun Su>		Dateg 2023-07-02
	Approveg <Alan Xiao>		Dateg 2023-07-03
Model No: <Model No>	Sch Vsg MOKU_SCH_FROM_TONLY_VERSION_A		Dateg 20231219
Titleg <Page Name>	PCB Vsg 40-XXXXXX-XXXXX>		Sheet: 3 of 7

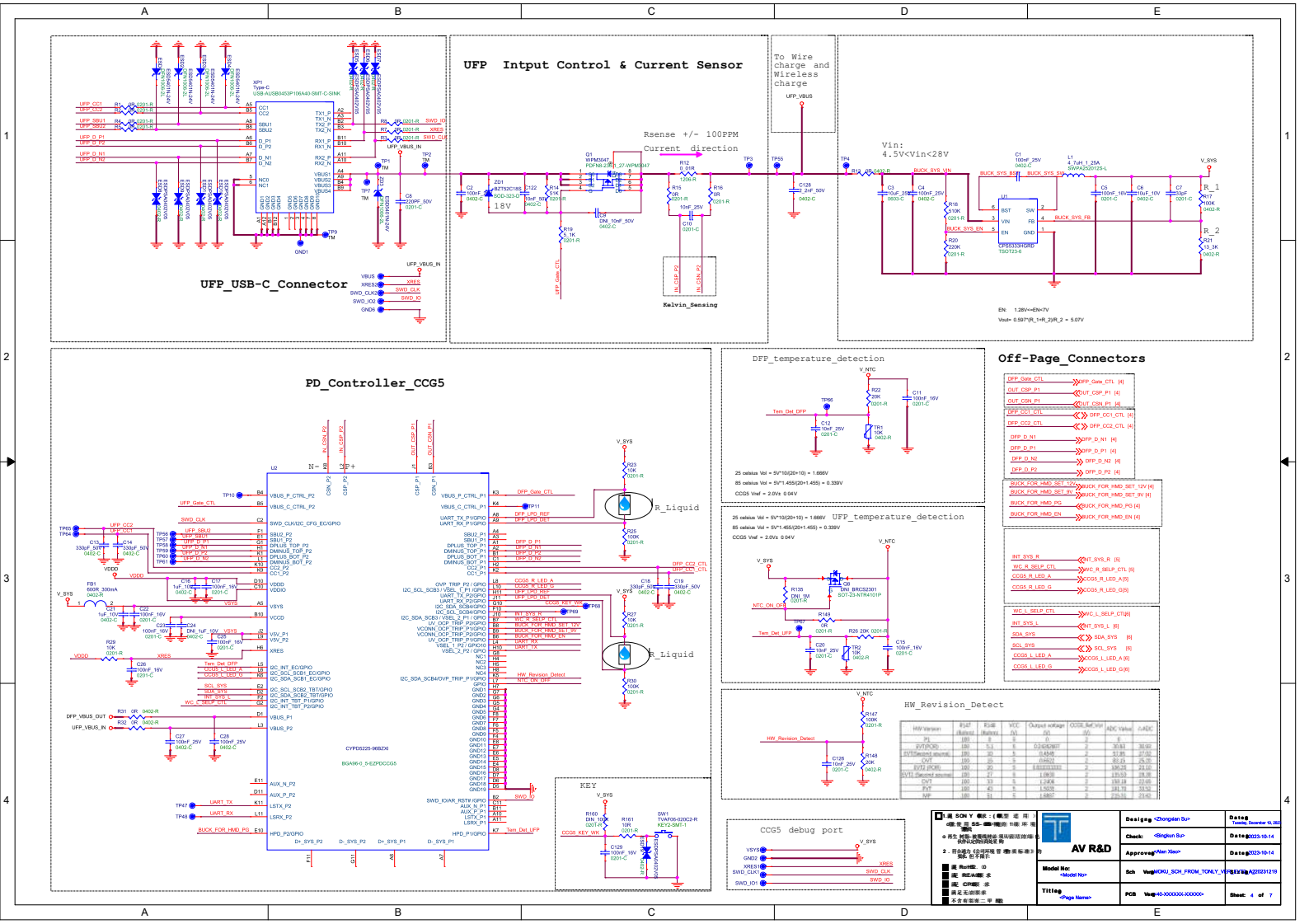
UFP_USB-C_Connector
UFP Intput Control & Current Sensor
To Wire charge and Wireless charge
Rsense +/- 100PPM
Current direction
Kelvin_Sensing
Vin: 4.5V<Vin<28V
PD_Controller_CCG5
DFP_temperature_detection
UFP_temperature_detection
Off-Page_Connectors
HW_Revision_Detect
KEY
CCG5 debug port
R_Liquid
AV R&D

Buck_for_HMD

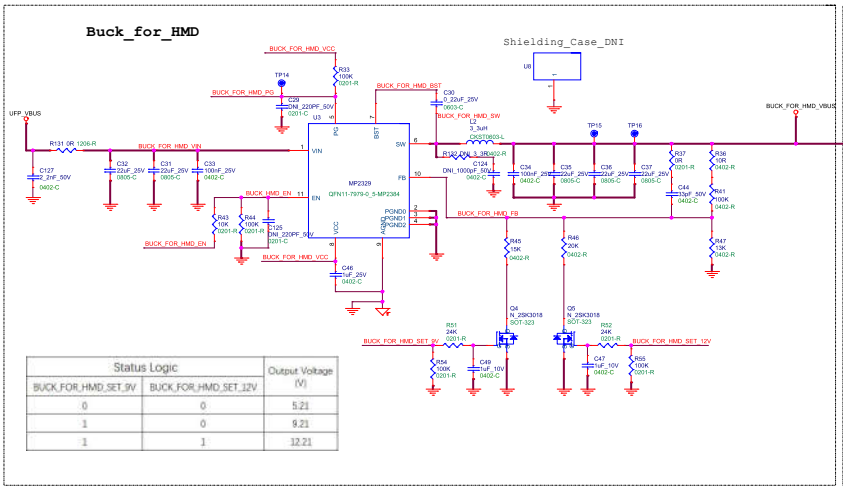

Status Logic		Output Voltage (V)
BUCK_FOR_HMD_SET_9V	BUCK_FOR_HMD_SET_12V	
0	0	5.21
1	0	9.21
1	1	12.21

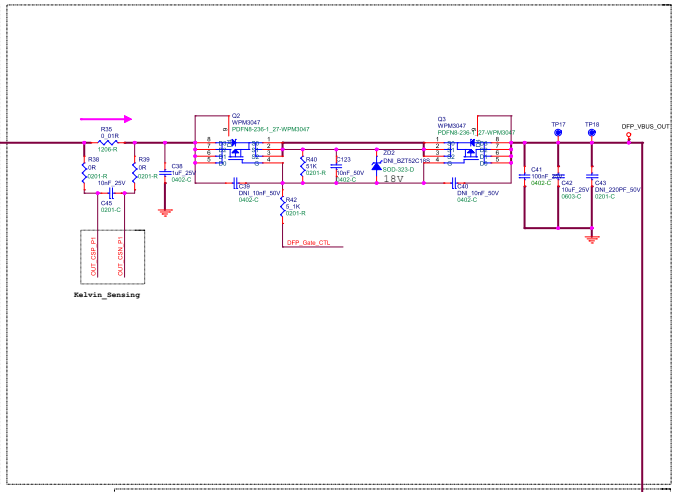

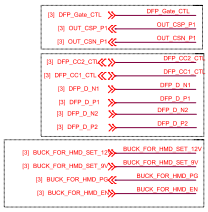

DFP_CC_Control

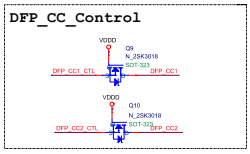

DFP_Test_Poin

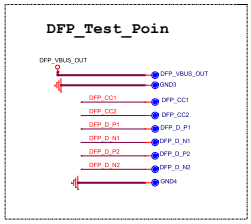

Mark_Poin

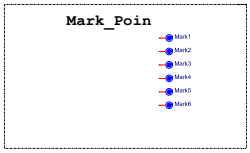

DFP_Connector

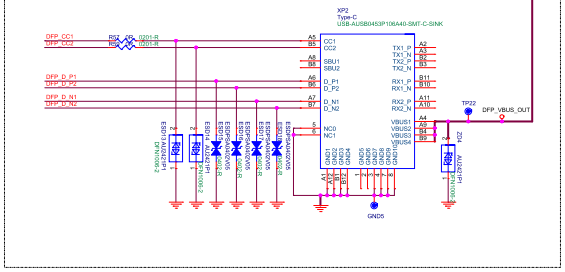

AV R&D	Designe	<Zhongxian Su>	Date
	Check:	<Binghun Su>	Date
	Approved	<Alan Xiao>	Date
Model No:	Sch	Ver	
Titleg	PCB	Ver	Sheet: 5 of 7

BUCK_FOR_R_TX

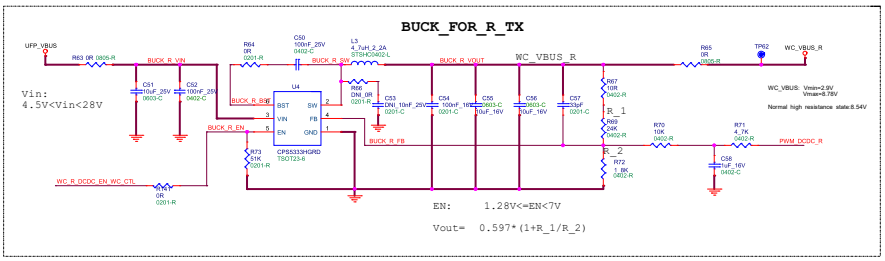

WC_I2C_VOL_change_R

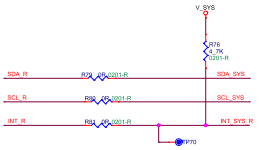

WC_R_LED

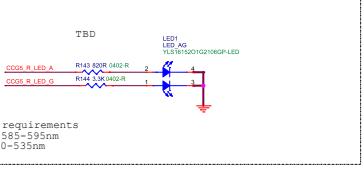

WC_R_CPS8601

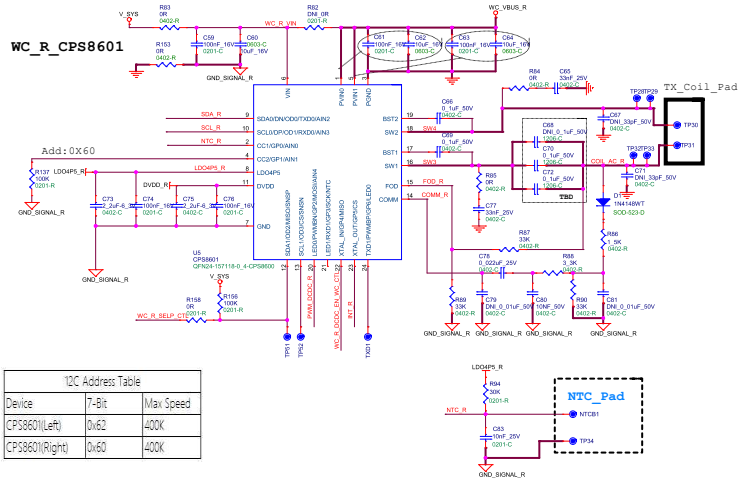

I2C Address Table		
Device	7-Bit	Max Speed
CPS8601(Left)	0x62	400K
CPS8601(Right)	0x60	400K

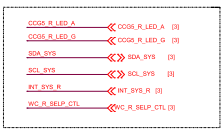

AV R&D	Designed: <Zhongxian Su>	Date: Tuesday, December 19, 2023
	Check: <Bingkun Su>	Date: 2023-10-14
	Approved: <Allen Xiao>	Date: 2023-10-14
Model No: <Model No>	Sch Ver: MOKU_SCH_FROM_TONLY_V1.0	Rev: A20231219
Titleg: <Page Name>	PCB Ver: 40-XXXXXX-XXXXX	Sheet: 6 of 7

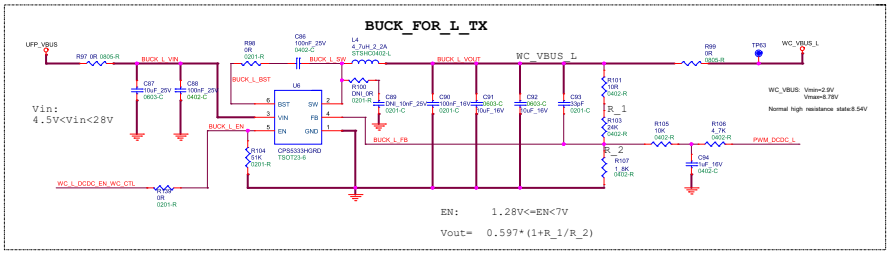

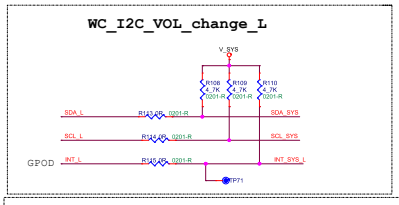

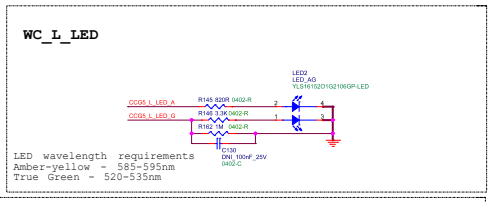

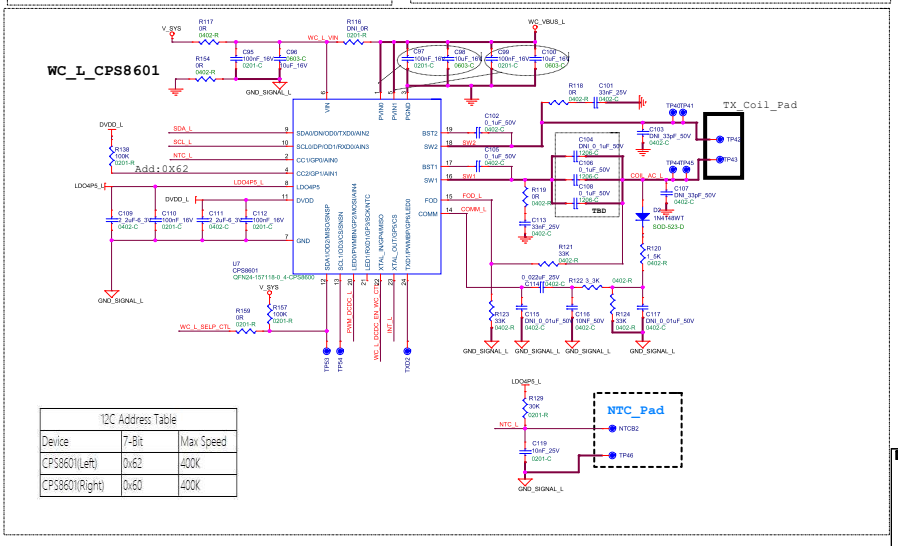

I2C Address Table		
Device	7-Bit	Max Speed
CPS8601(Left)	0x62	400K
CPS8601(Right)	0x60	400K

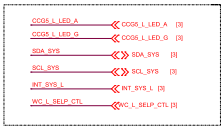

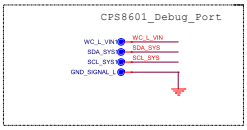

1：此 SCH 下载软件（程序）应用于 CPS8601 芯片 55-[illegible] 11版 环境。

2：符合地方《合同环境管理条例》要求标准下的 BOM 表不同于：

- 此 RoHS2.0 版
- 此 REACH 版 求
- 此 CP8601 版 求
- 其它无说明版
- 不含有害第二甲 版

AV R&D

Designed	<Zhongxian Su>	Date: Tuesday, December 19, 2023
Check:	<Bingkun Su>	Date: 2023-10-14
Approved	<Allan Xiao>	Date: 2023-10-14
Model No:	<Model No>	Sch Ver: WOKU_SCH_FROM_TONLY_V[illegible] REV: A 20231219
Title:	<Page Name>	PCB Ver: 40-XXXXXX-XXXXX Sheet: 7 of 7

REVISION HISTORY

VER	DATE	DESIGNER	CAUSE	DESCRIPTION
RFQ	2023-06-30	Zhongxian Su	First version	First version
VER_P1_A	2023-07-12	Zhongxian Su	The Layout does not meet the requirements	Some resistors are changed to 0402 package C9,C10,C19,C45,C88,C123,C131 280202-000087 10 NF 50V +/-10% 0402 ->280101-000074-1 10NF 25V +/-20% 0201
VER_P1_B	2023-07-13	Zhongxian Su	Adjust LPD according to customer needs	1:Delete the original LPD circuit 2:Update LPD
VER_P1_C	2023-07-14	Zhongxian Su	Meta and CPS team review	1.Update the network label 2.Update the UART net 3.Update the Zener voltage form 15V to 18V 4.Update the NTC's power to control 5.Update V_BUS from 3.3V to 5V, CPS8600 Vin, CPS8600 pin define
VER_P1_D	2023-07-15	Zhongxian Su	Meta team review	1:Update V_SYS from 5V to 3.3V, CPS8601 Vin to PVIN 2:Added CPS8601 program point 3:VBUS Changed from ESD to TVS 4.BUCK_FOR_HMD_U3 Change SY8386A to MP2329
VER_P1_D	2023-07-16	Zhongxian Su	Meta team review	1:Add HW_Revision_Detect 2.DFP Output P-FET's DS cap remove 3.Adjust WC power supply range R72 / R107---change 1.2K to 1.5K
VER_P1_E	2023-07-18	Zhongxian Su	Meta team review	R70 / R105---change 5.1K to 10K R71 / R106---change 2.7K to 5.1K 1: WC shares one I2C, and the left and right addresses of the WC are added 2:add R149
VER_P1_E	2023-07-22	Zhongxian Su		ESD1/ESD2/ESD3/ESD4/ESD13/ESD14 change 0603-R to DFN1006-2
VER_EVT_A	2023-10-14	Zhongxian Su	PCB LAYOUT optimization	1. Remove the excess pull-up resistor position of I2C, R74, R75 2. Remove the XP3 / XP4 connector; 3. Remove the single point connection GND resistor of R150, and directly use the PCB wire single point GND connection 4. Remove R142, R140
				5. Wireless charging of Power GND and Signal GND optimization 6. The GND of the LED was changed from the Signal GND to the GND 7. Remove R151 / R152, and use wireless charging single point grounding through R153 / R154. 8.Change C68/C104 to NC.Add C172/C108 with 0.1uF.
			1.LED UX control logic optimization 2.LED brightness adjustment	1.R70 to NC, R105 to 680 ohm; 2.R78 2.7K to NC, R144 NC to 2.4K; 3.R111 1K to NC, R145 NC to 680 ohm; 4.R112 2.7K to NC, R146 NC to 2.4K; 5. Adjust the resistor package from 0201 to 0402
			Since the output voltage of the wireless charging Rx varies from 3.8V to 4.7V, it is necessary to adjust the wireless charging voltage gain Gvv.	6.Delete R77,R78,R111 R112 1.R72 charge from 1.5K to 1.8K, voltage regulating range from 3.8V~11.1V change to 2.9V~8.78V; 2.R107 charge from 1.5K to 1.8K, voltage regulating range from 3.8V~11.1V change to 2.9V~8.78V;
			1.Power optimization 2.ESD performance improvement 3.PCB version change	1.U2 (CCG 5) pin G2 connected to U5 (CPS8601) pin12, intermediate series R158 (0 ohm) and added R156(4.7K) pulled up to VSYS. 2.U2 (CCG 5) pin B7 connected to U7 (CPS8601) pin12, intermediate series R159 (0 ohm) and added R157(4.7K) pulled up to VSYS. 3.ESD13/ESD14/ZD4 charge from ESD5401N-24V to AU2421P1. 4.R148 charge from 0ohm to 5.1K.
			EMC performance improvement	1.R84,R85,R118,R119 charge from NC to 0ohm; 2.C65,C77,C101,C113 charge from NC to 33nF; 3.Add C127,C128,(2.2nF) at the UFP_VBUS wire to GND;
			When Moku power down, HMD will try OTG to Moku DFP port. Which cause HMD always consuming power.	Add Q6/Q7(N-MOSFET N_2SK3018) in series on the CC line of the DFP port.
			Cost down	1.Q8 charge from BRCS2301 to NC, and R149 charge from NC to 0 ohm; 2.ZD2 charge from BZT52C18S to NC
VER_EVT2_A	2023-12-19			EVT2 version

■ 通 SON Y 标准：(概型 适 用)
■通 依 据 BS- 标准(规的 1 级 环 境
测试
☆ 再生 材质 满足欧盟指令 国际家用动物产
的RoHS2.0环境友好
2 . 符合地方《合同环境 管 理标准》的
制造，如不指示。
■ 通 RoHS2. 0
■通 REA标 求
■通 CP标 求
■满足无卤要求
■不含有铅第二甲 酯类

AV R&D	Designed: <Zhongxian Su>	Date: Tuesday, December 19, 2023	
	Check: <Binghan Su>	Date: 2023-10-14	
	Approved: <Alan Xiao>	Date: 2023-10-14	
Model No: <Model No>	Sch Ver: MOKU_SCH_FROM_TONLY_VER_A	Date: 20231218	
Title: <Page Name>	PCB Ver: 40-XXXXXX-XX000	Sheet: 5 of 7	