Introduction to Systems Architecture

1 Introduction

```
import java.util.*;

public class HowOld
{
  public static void main(String [] args)
  {
    Scanner scan = new Scanner(System.in);
    int age;

    System.out.print("How old are you: ");
    age = scan.nextInt();

    if (age >= 21)
      System.out.println("You are 21 years or older");
    else
      System.out.println("You are under 21 years of age");
  }
}
```

- From previous subjects, you've seen programs in Java like the one above.
- You have been told that this is translated, via bytecode, into machine instructions which then run on the computer.
- This raises several questions, like:
  - Exactly how does the computer hardware, and the CPU in particular, run machine instructions?
  - How are files stored and organised on the hard drive?
  - How can my machine be running many applications at the same time, even though I only have one CPU?
  - Exactly what is an operating system, and why do I need one?
- These are the sort of questions that we are going to answer in this subject.
- We are going to look at what happens when your program runs, when it asks the system to do `System.out.print()` etc.
- We will be looking at the hardware/software interface: how does the hardware run software, and how does software tell the hardware what to do.
- We will also place a focus on the security aspect of the combined hardware/software system: what features of each permit or restrict functionality, to whom, and how the hardware/software work in tandem to improve the overall security of the combined system.

2 A Computer System: Layers of Functionality

- We can view a computer system as a set of layers, each one providing some functionality to the layers above, and hiding the messy details of the layer behind some *interface* or set of *abstractions*. Here are the main ones:

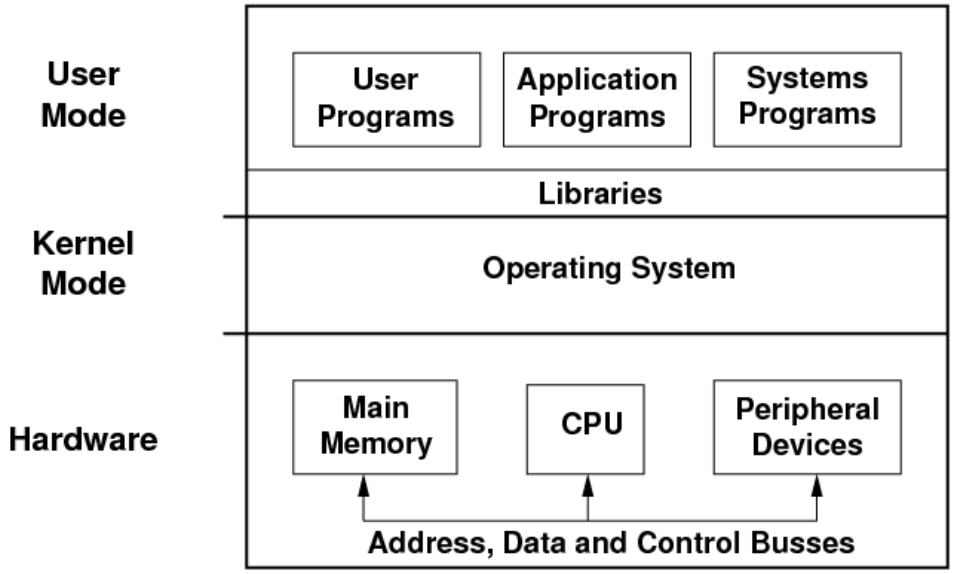

- The system can run three basic types of programs:
  - User programs are the ones that users write themselves, such as the Java program above. Unfortunately, this is becoming rarer and rarer.
  - Application programs are those which provide a certain application or functionality to the user, such as web browsers, document editors, spreadsheets, e-mail readers etc.
  - Systems programs are those programs which come with the operating system and which allow the user to do low-level, diagnostic or configuration operations, e.g. set up networking, check the ink levels in the printer, defragment the files on a hard disk etc.
- Below the programs are a set of libraries. Each library contains a set of commonly-used functions which are made available to the programs so that programmers don't have to keep rewriting them. For example, the `sqrt()` maths function is in the library, as are functions to draw windows and widgets on the screen, to do DNS queries etc.
- All of the above operate in **user mode**. In this mode, direct access to the hardware is prohibited. Programs running in user mode are given an **address space**, visible only to themselves, which contains enough memory for them to do their job.
- Below the user mode is the operating system, which runs in **kernel mode**. It has full access to the hardware, as well as access to all the free memory and the memory in use by the running programs.
- The operating system has three main tasks to perform.
  1. The operating system must shield the details of the hardware from the application programs, and thus from the user.
  2. The operating system has to *substitute* a set of abstract services to the application programs, to replace the physical hardware services. When applications use these abstract services, the operations must be translated into real hardware operations.
  3. Finally, the resources in a computer (CPU, memory, disk space etc.) are limited. The operating system must act as a resource manager, optimising the use of the resources, and protecting them against misuse and abuse. When a system provides multiuser or multitasking capabilities, resources must be allocated fairly and equitably amongst a number of competing requests.
- So far, all of these levels are software levels. In general, the programs, libraries and the operating system are translated to machine instructions. Programs run their instructions, and as required they can request the libraries and the operating system to perform some tasks on their behalf.
- Below the software is the hardware, whose job is to run the software instructions in the programs, libraries and the operating system. The main components are:
  - the CPU which actually performs the instructions. However, it only has immediate access to a small number of very fast memory locations known as *registers*. To store large amounts of data which a program is running, we need

- main memory, which has large amounts of much slower data storage. This holds the machine instructions of the programs which are running, and the data they are currently using.
- The CPU and main memory are connected to the other, peripheral devices devices on the system such as I/O devices like keyboards and screens, network interfaces, hard disks etc. Typically, the main memory is about 100x slower than the CPU, and the peripheral devices are 1000x or more slower than the CPU.
- All of the hardware is interconnected by a set of **busses** which move data between the hardware devices, as well as the machine instructions and other control signals.

2.1 Interfaces and Abstractions

- As mentioned, each layer hides its own messy details and instead provides an interface or a set of abstractions to the layer above. Let's quickly look at each of the interfaces and abstractions.
- Internally, the operation of the CPU, and the intercommunication between it, the memory and the peripheral devices is nasty, complicated, and of no consequence to the programmer who just wants to run her programs.
- The CPU hides its operation, and replaces it by a set of **machine instructions** which the programmer can use to tell the CPU what to do. In general, all CPUs provide instructions to:
  - do basic maths: add, subtract, multiply, divide.
  - make comparisons between data items: ==, !=, >, >=, <, <=
  - deal with data items of different types and sizes: characters, integers, floating-point numbers.
  - divert the CPU to new instructions depending on the result of a comparison: branches, jumps, function calls.
  - deal with the differing levels of privilege (user mode and kernel mode), and to control the main memory and the peripheral devices.
- Each CPU has a different set of instructions, and we refer to each one as the CPU's instruction set architecture or **ISA**.
- We will be looking at the internal operation of the CPU, as well as the design of instruction sets and the ISA of some example CPUs.
- The next interface is that provided by the operating system, which controls the hardware for security and peformance reasons, and attempts to allocate resources equitably to a number of competing programs.
- The operating system shields the programs from the hardware, and substitutes a more abstract set of services.
- Examples of these abstract services are:
  - the *process*, which is a program in execution surrounded by an environment which only it has access to.
  - *virtual memory*, which allows a process to appear to have more memory than is physically on the system.
  - *files* and a *filesystem*, a tree-structured collection of documents, whereas the disk hardware does not provide this.
  - *windows* and their management, again a concept which the graphics hardware does not provide.
- These operating system services come in the form of a set of **system calls**. A program can make a system call, and ask the operating system (in kernel mode) to perform some action that the program (in user mode) cannot do itself, e.g. create a new file, or get another 100 M of memory, or print a document to the printer.
- Above the operating systems are the libraries. Each library usually groups several related functions together. We call the set of functions that a library provides its **Application Programming Interface**, or **API**.
  - Side note: from now on, as you use things, look out for abstractions and interfaces.
  - When you sit in the driver's seat of a car, what is the interface? Is it standardised, or are there a few different interfaces?
  - When you use your mobile phone, what is the interface?

3 The Basics of Computer Architecture

- In the first half of the subject, we are going to look at how the CPU is designed and how it interacts with the other hardware components of the system: main memory, disk drives, input/output devices like the keyboard, network card etc.

- All of this is known as *computer architecture*.
- We are going to stay just above the electronics side of the area (computer engineering) and concentrate on the logical side of computer architecture.

3.1 von Neumann Design and the Instruction Cycle

- Nearly all modern computers are designed using the von Neumann architecture, also known as the **stored-program architecture**.

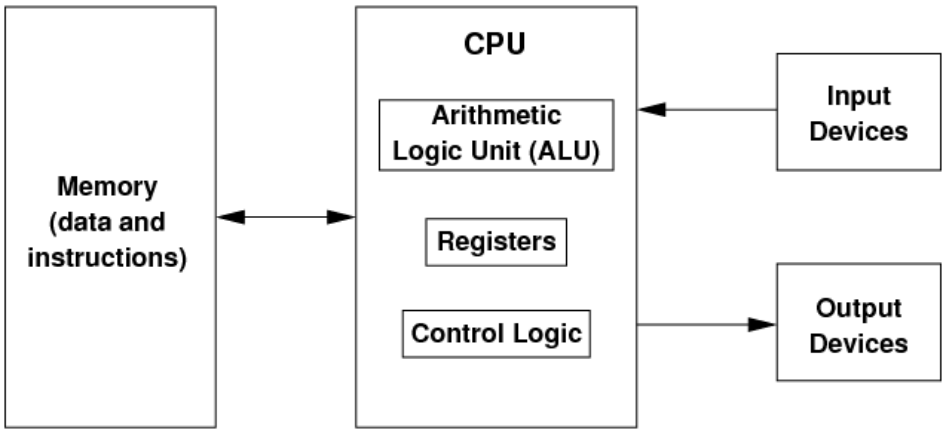

- In this architecture, there is a processing unit (which we call the **Central Processing Unit** or **CPU**) which performs the basic computing operations (add, subtract, etc.).
- This unit obtains its data from an external memory unit, and writes back the results to the memory unit.
- The memory unit is also used to hold the program instructions, which control the processing unit and tell it how to manipulate the data. The idea of keeping both the data and the instructions in the memory unit is the essence of the stored-program architecture.
- Why is this important? Early computers like ENIAC were programmed by manually rewiring parts of the computer, so as to change the hard-wired program instructions.

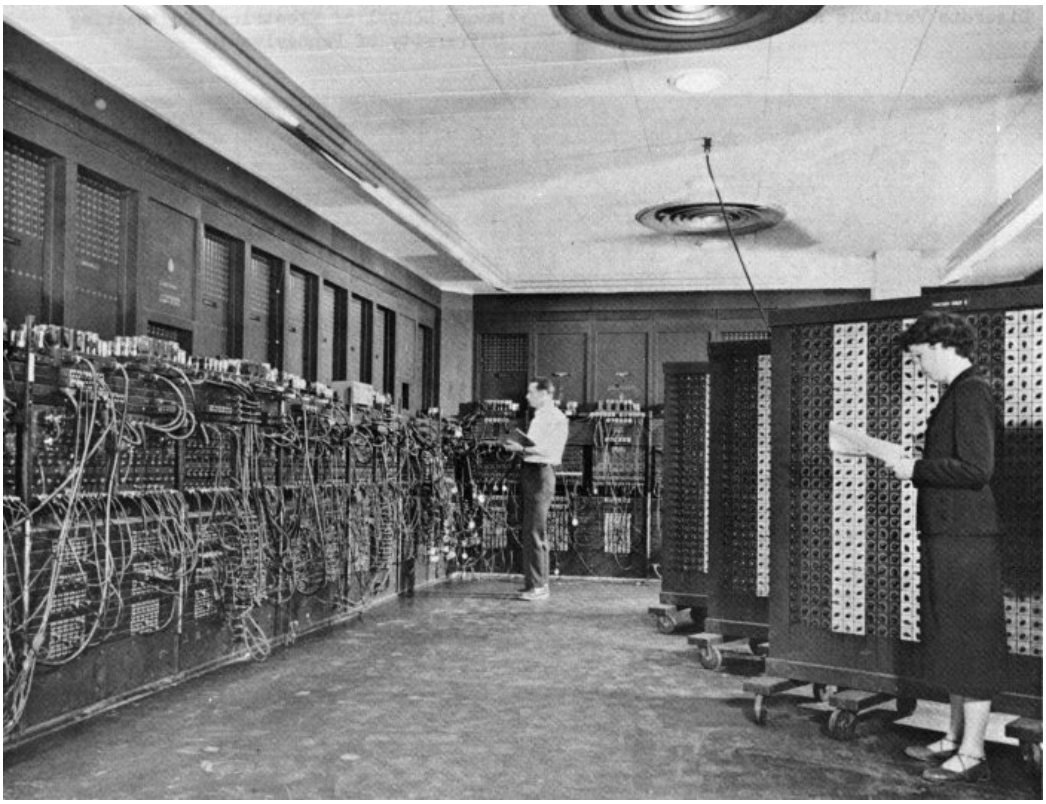

(from Wikipedia)

- John von Neumann, among others, realised that the program's instructions could be stored in memory.

- The computer could then fetch the next instruction from memory, decode the meaning of the instruction, and then perform the instruction.
- If data was required from memory to perform the instruction, this could also be fetched. When the instruction was complete, any result of the instruction could be written back out to memory.
- Thus, to perform an instruction on a von Neumann machine, we need to perform an **instruction cycle**:
  - fetch the next instruction
  - decode the instruction
  - execute the instruction
  - save the results of the instruction
- This also implies that the computer is keeping track of where in memory the next instruction is located.
- Internally, the CPU keeps a **program counter**, or **PC**, which holds the address of the next instruction to fetch.
- The "counter" part is a bit of a misnomer; it's probably better to call it the "next instruction address".
- In the normal flow of execution, instructions are consecutive, so the CPU can increment the PC to be the address of the next instruction.
- However, when the CPU makes decisions or loops, the next instruction is not immediately after the previous one, so the PC is not simply incremented; its value jumps. We will see how this is done later.

3.2 The Structure of Memory

- For the purposes of this subject, we can view memory as an array of cells; each cell holds one byte (i.e. 8 bits).
- Each cell has a unique numeric address, starting at 0 and going up to some large number:

0	1	2	3	4	5	...
01010010	11111110	10111000	00010010	01011001	11001100	...

- The CPU and memory are connected via three busses:

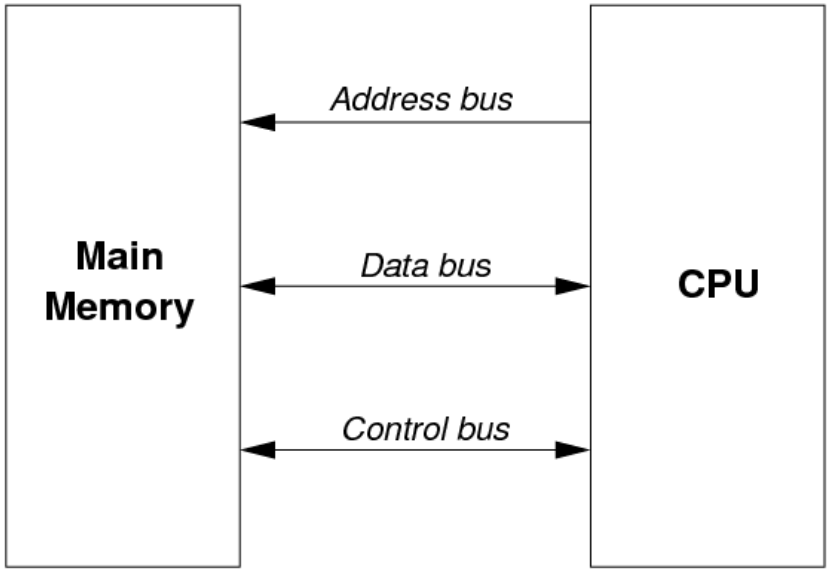

- The CPU uses the **address bus** to inform the memory of the specific cell it is interested in.
  - if the address bus is 32 bits wide, then 2^{32} memory cells can be addressed. i.e. 4 Gbytes.
- The CPU uses the **control bus** to inform the memory what operation to perform: read the cell, (over)write the cell.
  - the memory can use the control bus to tell the CPU if the action succeeded or failed. For example, in a computer with only 2G of 4 Gbytes installed, accesses to memory locations about the 2G mark will fail.
- Finally, the **data bus** conveys the data (or a program instruction) between the CPU and memory.
  - on a write, data flows from the CPU to the memory, overwriting the contents of the cell.

- on a read, data flows from a cell in memory to the CPU.

3.3 The Data Bus Size and the von Neumann Bottleneck

- The size of the data bus defines the natural size of data on a CPU.
- When a computer is called a "32-bit" computer, this means that the data bus is 32 bits in size, and reads & writes to/from memory are normally done in groups of 32 bits
  - this immediately implies that a 32-bit fetch from address X cannot just involve the cell at X, because each cell is 1-byte in size
  - a 32-bit fetch will fetch 32 bits of data from consecutive cells starting at address X, i.e. X, X+1, X+2 and X+3.
- We use the term "**word**" to mean the natural size of data on a computer. A 32-bit computer uses 32-bit words; a 64-bit computer uses 64-bit words.
- One of the main drawbacks of the von Neumann architcture is that the data bus presents a bottleneck: this is the only path through which the CPU can obtain its instructions and data.
- In practice, this is a real problem. It would be too expensive to create large amounts of memory which runs as the same speed as the CPU, so the speed of memory and the data bus is a significant bottleneck to the design of fast computers.
- One solution is to employ a hierarchy of memory of different amounts and speeds.
- This works because most computer programs exhibit [locality of reference]: over a short period of time, most data and instruction accesses come from the same set of memory locations. Therfore, we can cache the values in these memory locations in the higher-speed memory units.

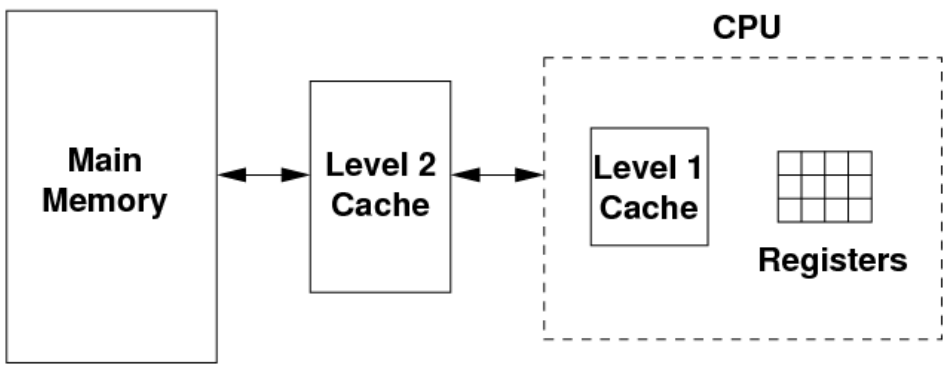

- The CPU performs its operations on a small set of **registers**, each of which holds one word of data. Typically, a CPU has between 8 and 64 registers only.
- To manipulate more data than can be kept in the registers, the CPU needs to read from/write to main memory.
- Using the locality of reference, the most frequent data/instruction values are kept in the Level 1 cache, which is typically 2-3x as slow as the registers, and is around 64K-256K bytes in size. The L1 cache usually resides on the CPU.
- If the L1 cache is too small, a fast data bus connects the CPU out to the L2 cache. This is typically 10-20x slower than the CPU registers, and around 1M-16M bytes in size.
- And when the running program's locality of reference exceeds that of the two caches, the CPU has to go all the way out to main memory to access data & instructions. Main memory is typically 20-200x slower than the CPU registers.
- The operation of memory caches is complex and fraught with problems. We won't be exploring cache operation in this subject. Likewise, the improving the performance of the CPU with a pipeline will not be explored in this subject.

3.4 The Difference between Address and Data Bus Sizes

- Note that the address bus and the data bus are separate and unrelated.
- The size of the address bus determines how much memory can be addressed by a CPU: a 32-bit address bus can only address 4 Gbytes of RAM.

- The size of the data bus determines the natural size of data accesses on the CPU.
- Unfortunately, many common CPUs like the Intel Pentium have been designed with both busses the same size. This has given rise to the misconception that a 32-bit CPU (i.e. one with a 32-bit data bus) can only access 4 Gbytes of memory, which is false.
- It is quite possible to build a CPU with different bus sizes, and there are many, many examples of this.

3.5 Components of the CPU

- Let's now turn our attention to the components inside the CPU, where instructions are executed.

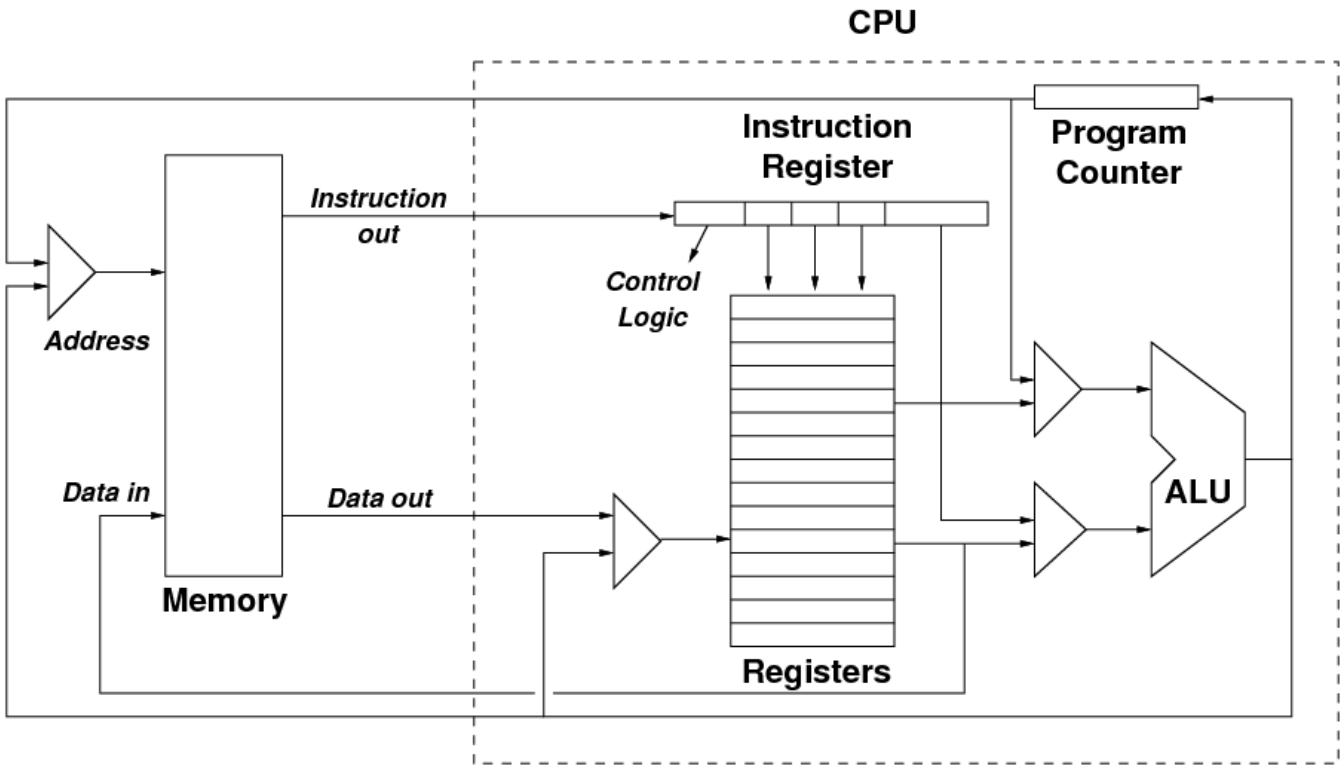

(adapted from Britton)

- The above diagram shows the main components of the CPU, and the arrowed lines show the main flows of data and instructions
  - Note that *Data in*, *Data out* and *Instruction out* represent data flows across the data bus, and
  - the flows out from the Program Counter and the ALU into the triangle labelled *Address* use the address bus.
- The **Program Counter** (PC) holds the address of the next instruction. During the fetch phase of the instruction cycle, the PC's value is sent across the address bus, and the next instruction travels back across the data bus into the CPU.
- The incoming instruction is stored in the **Instruction Register**. This is decoded to determine:
  - what *operation* to perform.
  - what *operands* does the operation act on: typically, one or more registers are chosen.
  - however, on some architectures, a *literal value* may be encoded in part of the instruction.
  - and on some architectures, the instruction might require further fetches of data from main memory.
- Parts of the instruction influence the **control logic** in the CPU (not shown in the diagram). The control logic is the set of signals which control the other components in the CPU, such as the ALU and the multiplexors.
- Once the instruction is decoded, the execution of the instruction can start.
- The **Arithmetic Logic Unit** (**ALU**), informed via the control logic of the operation, performs that operation on the operands and outputs the result.
  - The inputs to the ALU are chosen by **multiplexors**, which receive a number of inputs, and based on a number of control lines, select only one of the inputs to propagate to the multiplexor's output.

- When the ALU calculates its output, this needs to be stored somewhere. This could be:
  - back into a register in the CPU, or
  - stored in the Program Counter, e.g. when a jump is performed to skip past some instructions. Otherwise, the PC will just increment to the next value, or
  - the ALU's output can be written back to main memory.
- That ends one instruction cycle. The PC has a new value, and so the next instruction cycle can begin, with the CPU fetching a new instruction from memory.
- Finally, note the multiplexor to the left of the main memory block. This is used to choose either:
  - the address of the PC, so that a new instruction is fetched from memory, or
  - the address of a data item, so that it can be fetched from memory, or overwritten with a new value.
- Similarly, the multiplexor to the left of the registers chooses which register will be overwritten with data from memory, or the result of the ALU's operation.

File translated from TEX by TTH, version 3.85.
On 2 May 2011, 10:25.