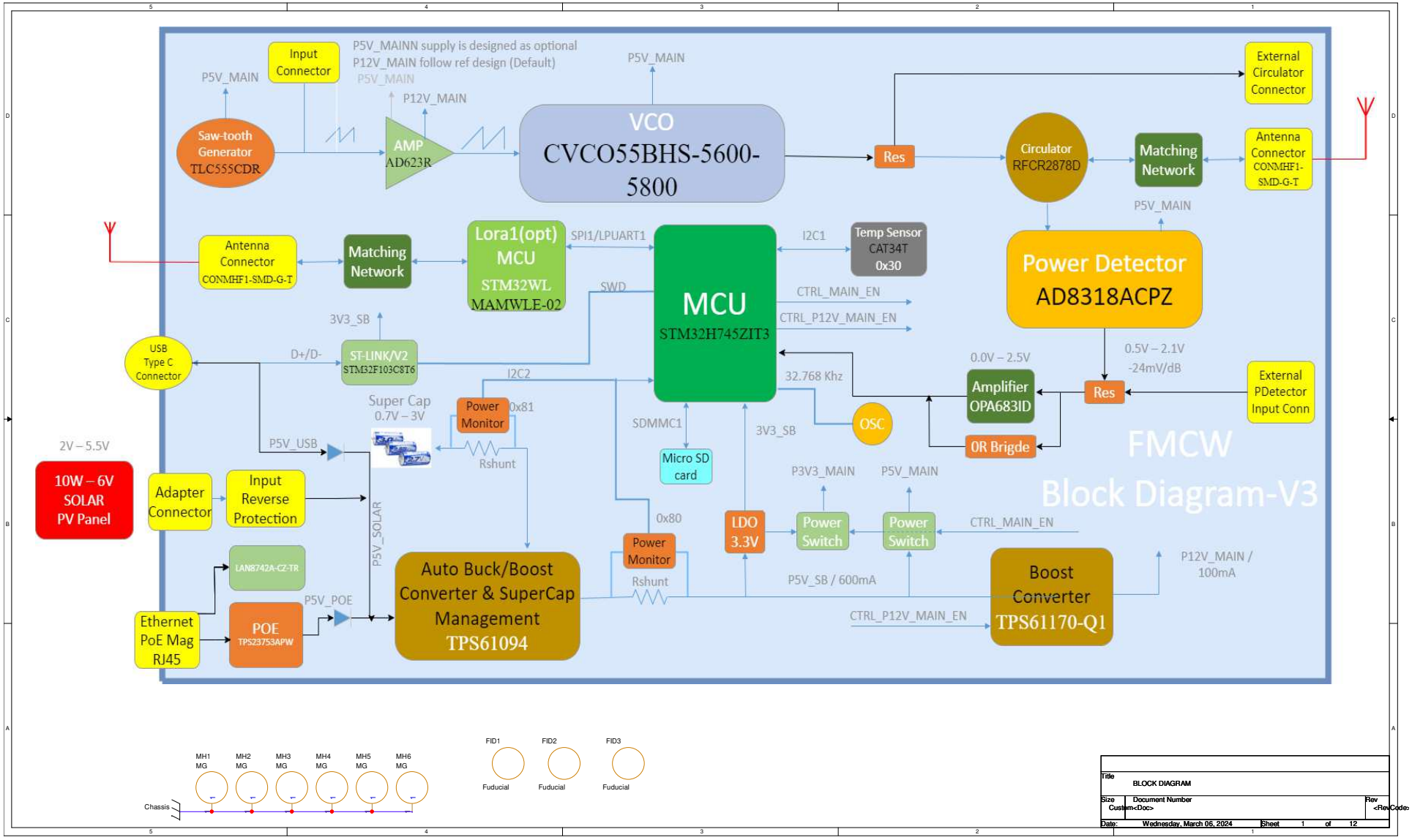

Title	BLOCK DIAGRAM	
Size: Custom	Document Number: <Doc>	Rev: <RevCode>
Date: Wednesday, March 06, 2024	Sheet 1 of 12	

PAGE INDEX

PAGE	PAGE CONTENT	PAGE	PAGE CONTENT
01	BLOCK DIAGRAM		
02	PAGE INDEX		
03	POWER ON SEQUENCE		
04	BLANK		
05	SOLAR INPUT & SUPER CAP MANAGERMENT		
06	12V_MAIN & 5V_MAIN & 3V3_MAIN & 3V3_SB		
07	MCU1 & LORA1 MODULE		
08	ST-LINK Controller & Micro SD CARD & USB TYPE C		
09	MCU2 IO BANK & External POWER DETECTOR CONN		
10	MCU2 POWER BANK & LORA2 MODULE		
11	SAW-TOOTH GENERATOR & AMPLIFIER & POWER DETECTOR		
12	CHANGE LIST		
13			
14			
15			
16			

Title	PAGE INDEX	
Size: Custom	Document Number: <Doc>	Rev: <RevCode>
Date: Wednesday, March 06, 2024	Sheet 2 of 12	

POWER ON SEQUENCE

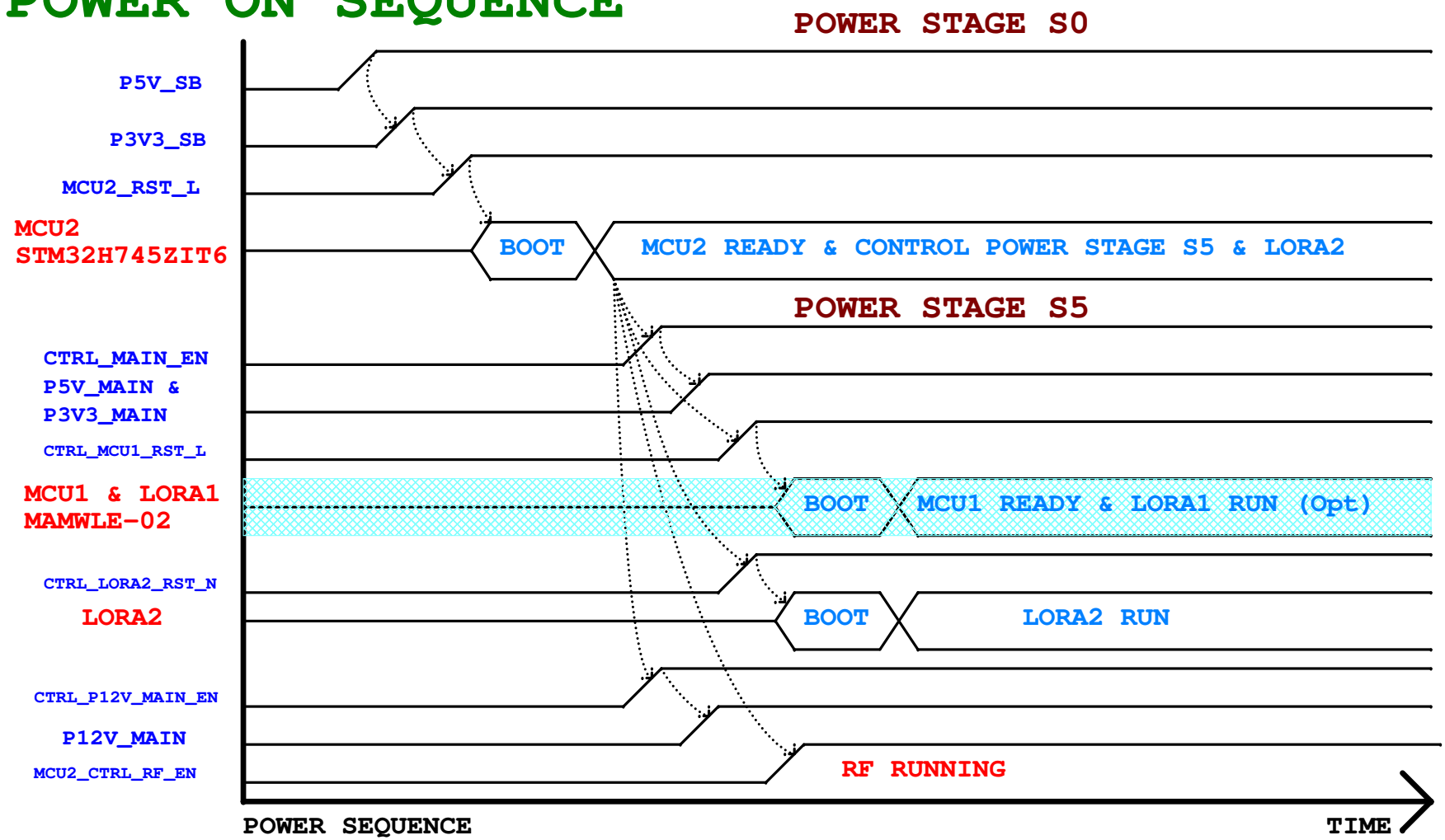

Title	POWER ON SEQUENCE		
Size: Custom	Document Number: <Doc>		Rev: <RevCode>
Date: Wednesday, March 06, 2024	Sheet 3 of 12		

BLANK

Title	BLANK		
Size: Custom	Document Number: <Doc>		Rev: <RevCode>
Date: Wednesday, March 06, 2024	Sheet 4 of 12		

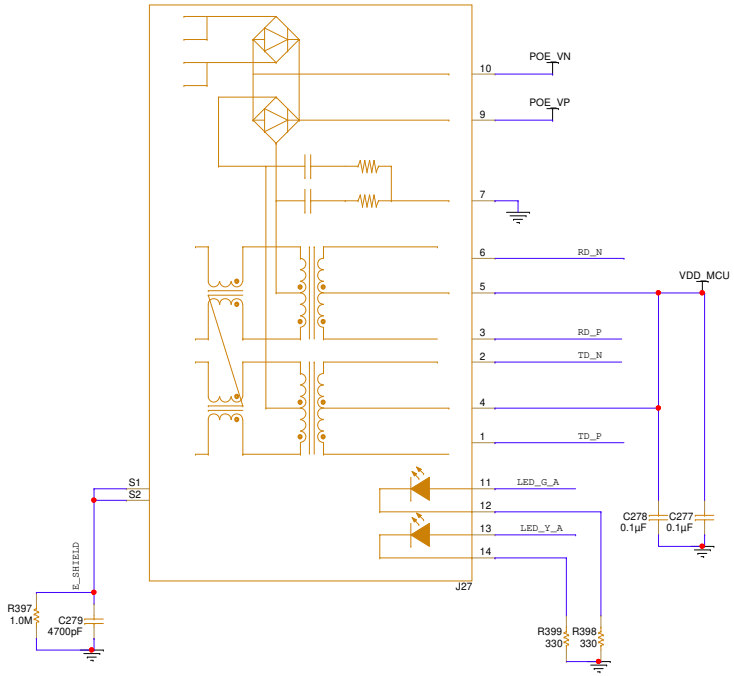

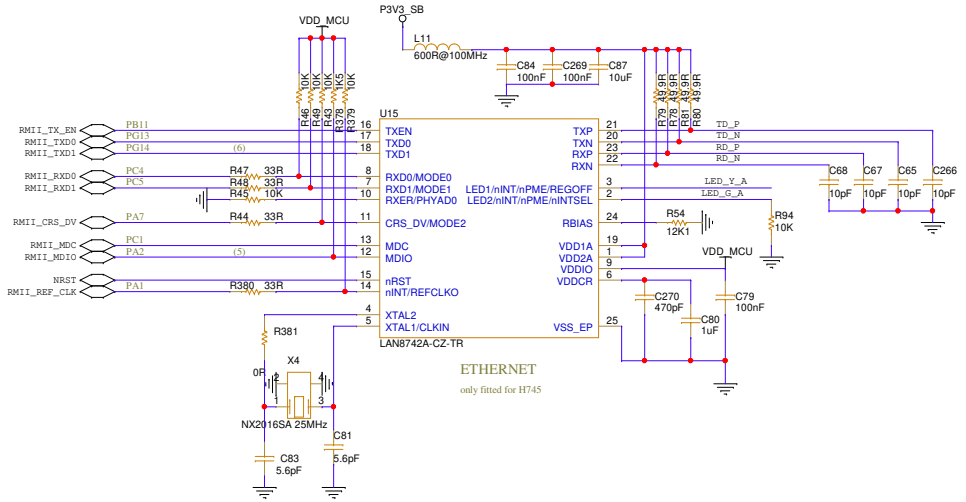

Title	BLANK	
Size: Custom	Document Number: <Doc>	Rev: <RevCode>
Date: Wednesday, March 06, 2024	Sheet 4 of 12	

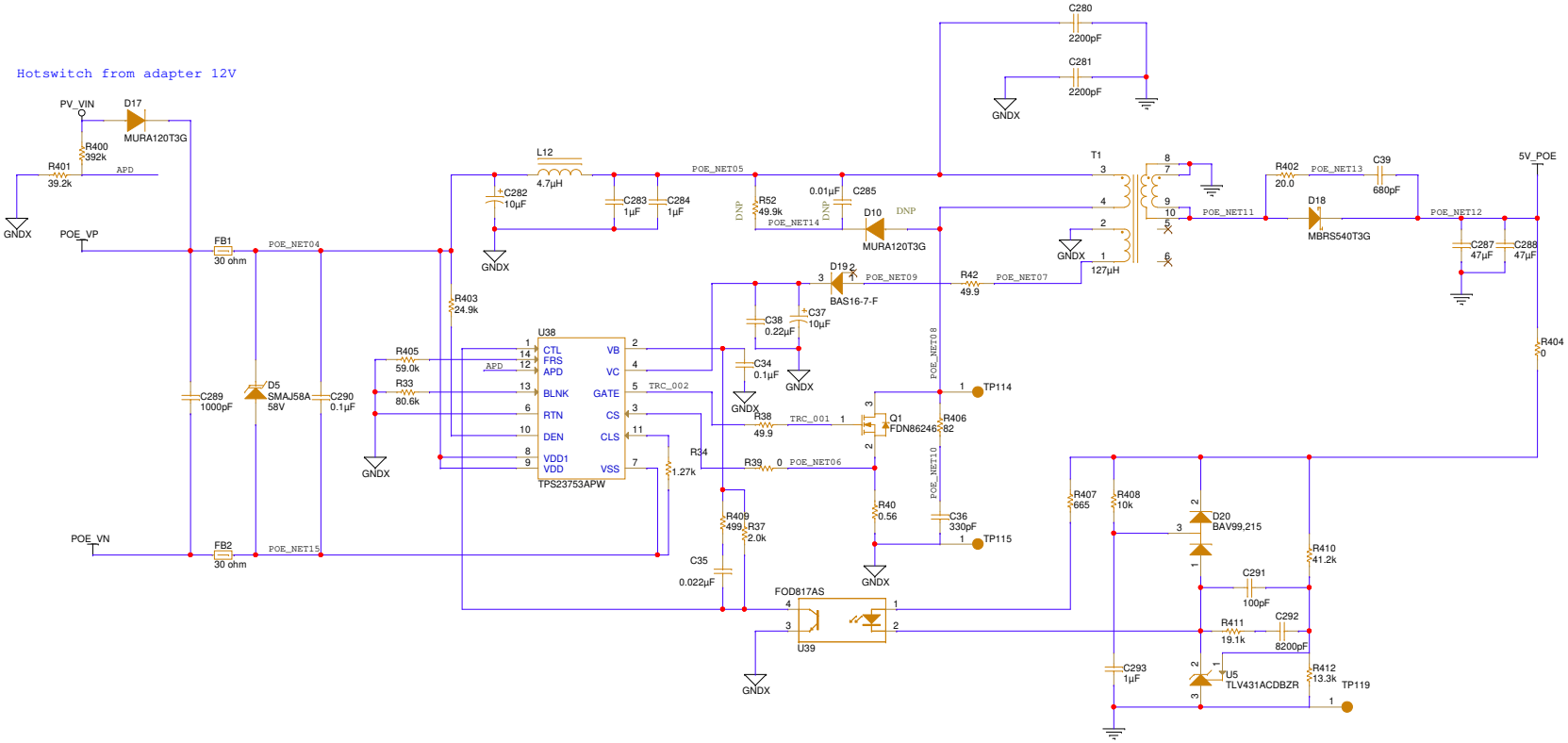

Title	BLANK		
Size	Document Number		Rev
Custom	<Doc>		<RevCode>
Date:	Wednesday, March 06, 2024	Sheet 4 of 12	

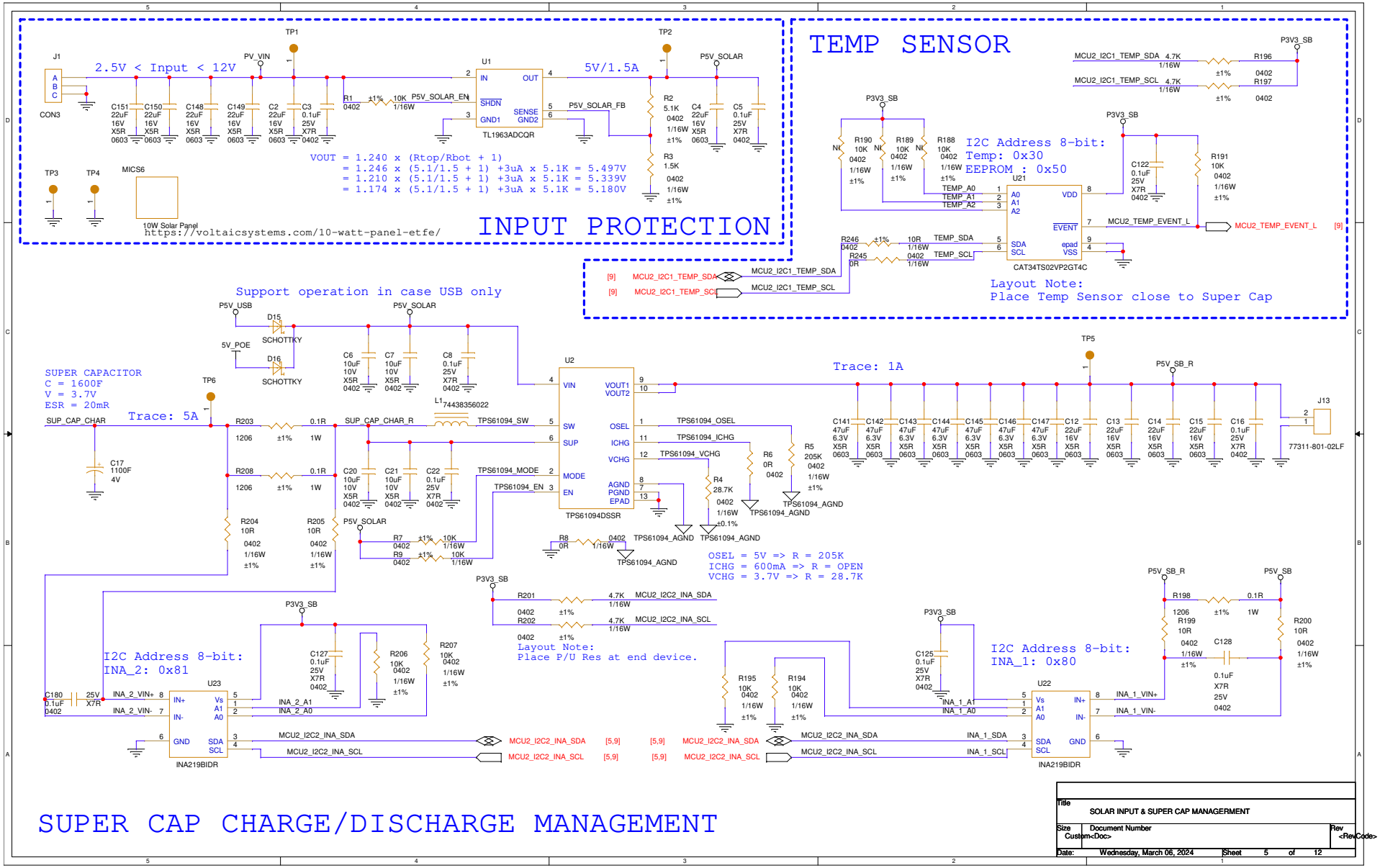
INPUT PROTECTION
2.5V < Input < 12V
PV_VIN
TP1
TP2
P5V_SOLAR
5V/1.5A
U1
TL1963ADCQR
P5V_SOLAR_EN
P5V_SOLAR_FB
VOUT = 1.240 x (Rtop/Rbot + 1)
= 1.246 x (5.1/1.5 + 1) +3uA x 5.1K = 5.497V
= 1.210 x (5.1/1.5 + 1) +3uA x 5.1K = 5.339V
= 1.174 x (5.1/1.5 + 1) +3uA x 5.1K = 5.180V
10W Solar Panel
https://voltaicsystems.com/10-watt-panel-etfe/
TEMP SENSOR
I2C Address 8-bit:
Temp: 0x30
EEPROM : 0x50
CAT34TS02VP2GT4C
MCU2_I2C1_TEMP_SDA
MCU2_I2C1_TEMP_SCL
MCU2_TEMP_EVENT_L
Layout Note:
Place Temp Sensor close to Super Cap
Support operation in case USB only
P5V_USB
5V_POE
SCHOTTKY
SUPER CAPACITOR
C = 1600F
V = 3.7V
ESR = 20mR
Trace: 5A
Trace: 1A
SUP_CAP_CHAR
SUP_CAP_CHAR_R
TPS61094_SW
TPS61094_MODE
TPS61094_EN
TPS61094_OSEL
TPS61094_ICHG
TPS61094_VCHG
TPS61094DSSR
TPS61094_AGND
OSEL = 5V => R = 205K
ICHG = 600mA => R = OPEN
VCHG = 3.7V => R = 28.7K
P5V_SB_R
P5V_SB
P3V3_SB
I2C Address 8-bit:
INA_2: 0x81
INA_1: 0x80
INA219BIDR
MCU2_I2C2_INA_SDA
MCU2_I2C2_INA_SCL
Layout Note:
Place P/U Res at end device.
SUPER CAP CHARGE/DISCHARGE MANAGEMENT
Title
SOLAR INPUT & SUPER CAP MANAGERMENT
Size
Custom<Doc>
Document Number
Rev
<RevCode>
Date:
Wednesday, March 06, 2024
Sheet
5
of
12

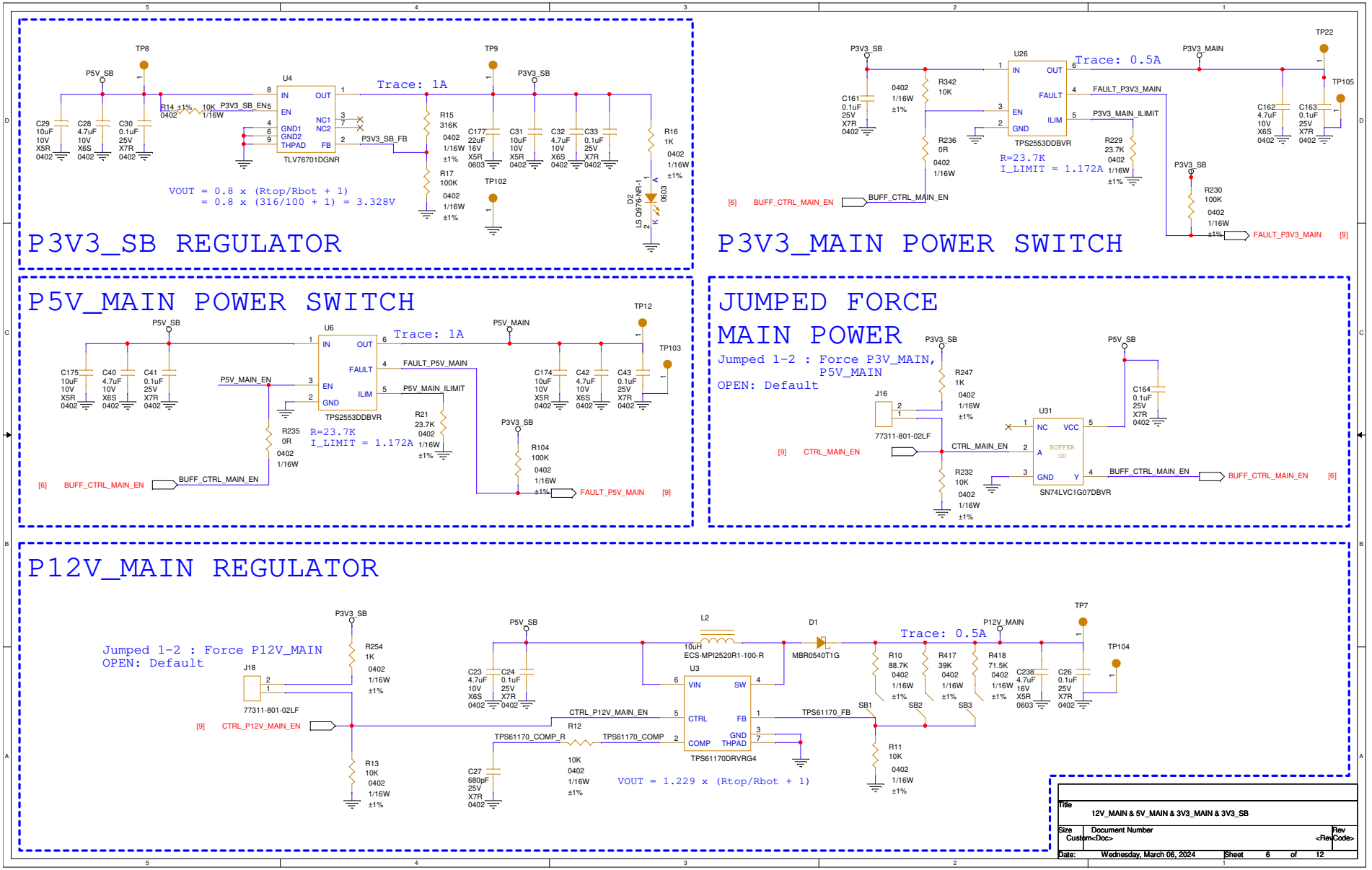
P3V3_SB REGULATOR
TP8
P5V_SB
U4
IN
OUT
EN
GND1
GND2
THPAD
NC1
NC2
FB
TLV76701DGNR
R14 ±1% 10K 1/16W 0402
P3V3_SB_EN
Trace: 1A
TP9
P3V3_SB
R15 316K 0402 1/16W ±1%
R17 100K 0402 1/16W ±1%
P3V3_SB_FB
TP102
C29 10uF 10V X5R 0402
C28 4.7uF 10V X6S 0402
C30 0.1uF 25V X7R 0402
C177 22uF 16V X5R 0603
C31 10uF 10V X5R 0402
C32 4.7uF 10V X6S 0402
C33 0.1uF 25V X7R 0402
R16 1K 0402 1/16W ±1%
D2 LS Q976-NR-1 0603
VOUT = 0.8 x (Rtop/Rbot + 1)
= 0.8 x (316/100 + 1) = 3.328V
P3V3_MAIN POWER SWITCH
P3V3_SB
U26
IN
OUT
FAULT
EN
ILIM
GND
TPS2553DDBVR
Trace: 0.5A
P3V3_MAIN
TP22
TP105
C161 0.1uF 25V X7R 0402
R342 10K 0402 1/16W ±1%
R236 0R 0402 1/16W
R=23.7K
I_LIMIT = 1.172A
FAULT_P3V3_MAIN
P3V3_MAIN_ILIMIT
R229 23.7K 0402 1/16W ±1%
C162 4.7uF 10V X6S 0402
C163 0.1uF 25V X7R 0402
R230 100K 0402 1/16W ±1%
[6] BUFF_CTRL_MAIN_EN
BUFF_CTRL_MAIN_EN
FAULT_P3V3_MAIN [9]
P5V_MAIN POWER SWITCH
P5V_SB
U6
IN
OUT
FAULT
EN
ILIM
GND
TPS2553DDBVR
Trace: 1A
P5V_MAIN
TP12
TP103
C175 10uF 10V X5R 0402
C40 4.7uF 10V X6S 0402
C41 0.1uF 25V X7R 0402
P5V_MAIN_EN
R235 0R 0402 1/16W
R=23.7K
I_LIMIT = 1.172A
FAULT_P5V_MAIN
P5V_MAIN_ILIMIT
R21 23.7K 0402 1/16W ±1%
C174 10uF 10V X5R 0402
C42 4.7uF 10V X6S 0402
C43 0.1uF 25V X7R 0402
P3V3_SB
R104 100K 0402 1/16W ±1%
[6] BUFF_CTRL_MAIN_EN
BUFF_CTRL_MAIN_EN
FAULT_P5V_MAIN [9]
JUMPED FORCE MAIN POWER
Jumped 1-2 : Force P3V_MAIN, P5V_MAIN
OPEN: Default
P3V3_SB
R247 1K 0402 1/16W ±1%
J16
77311-801-02LF
[9] CTRL_MAIN_EN
CTRL_MAIN_EN
R232 10K 0402 1/16W ±1%
U31
NC
VCC
A
BUFFER OD
GND
Y
SN74LVC1G07DBVR
P5V_SB
C164 0.1uF 25V X7R 0402
BUFF_CTRL_MAIN_EN
BUFF_CTRL_MAIN_EN [6]
P12V_MAIN REGULATOR
Jumped 1-2 : Force P12V_MAIN
OPEN: Default
P3V3_SB
R254 1K 0402 1/16W ±1%
J18
77311-801-02LF
[9] CTRL_P12V_MAIN_EN
CTRL_P12V_MAIN_EN
R13 10K 0402 1/16W ±1%
P5V_SB
L2
10uH ECS-MPI2520R1-100-R
D1
MBR0540T1G
U3
VIN
SW
CTRL
FB
GND
COMP
THPAD
TPS61170DRVRG4
C23 4.7uF 10V X6S 0402
C24 0.1uF 25V X7R 0402
TPS61170_COMP_R
R12 10K 0402 1/16W ±1%
TPS61170_COMP
C27 680pF 25V X7R 0402
TPS61170_FB
VOUT = 1.229 x (Rtop/Rbot + 1)
P12V_MAIN
TP7
TP104
Trace: 0.5A
R10 88.7K 0402 1/16W ±1%
R417 39K 0402 1/16W ±1%
R418 71.5K 0402 1/16W ±1%
C238 4.7uF 16V X5R 0603
C26 0.1uF 25V X7R 0402
SB1
SB2
SB3
R11 10K 0402 1/16W ±1%
Title
12V_MAIN & 5V_MAIN & 3V3_MAIN & 3V3_SB
Size
Custom
Document Number
<Doc>
Rev
<RevCode>
Date:
Wednesday, March 06, 2024
Sheet
6
of
12

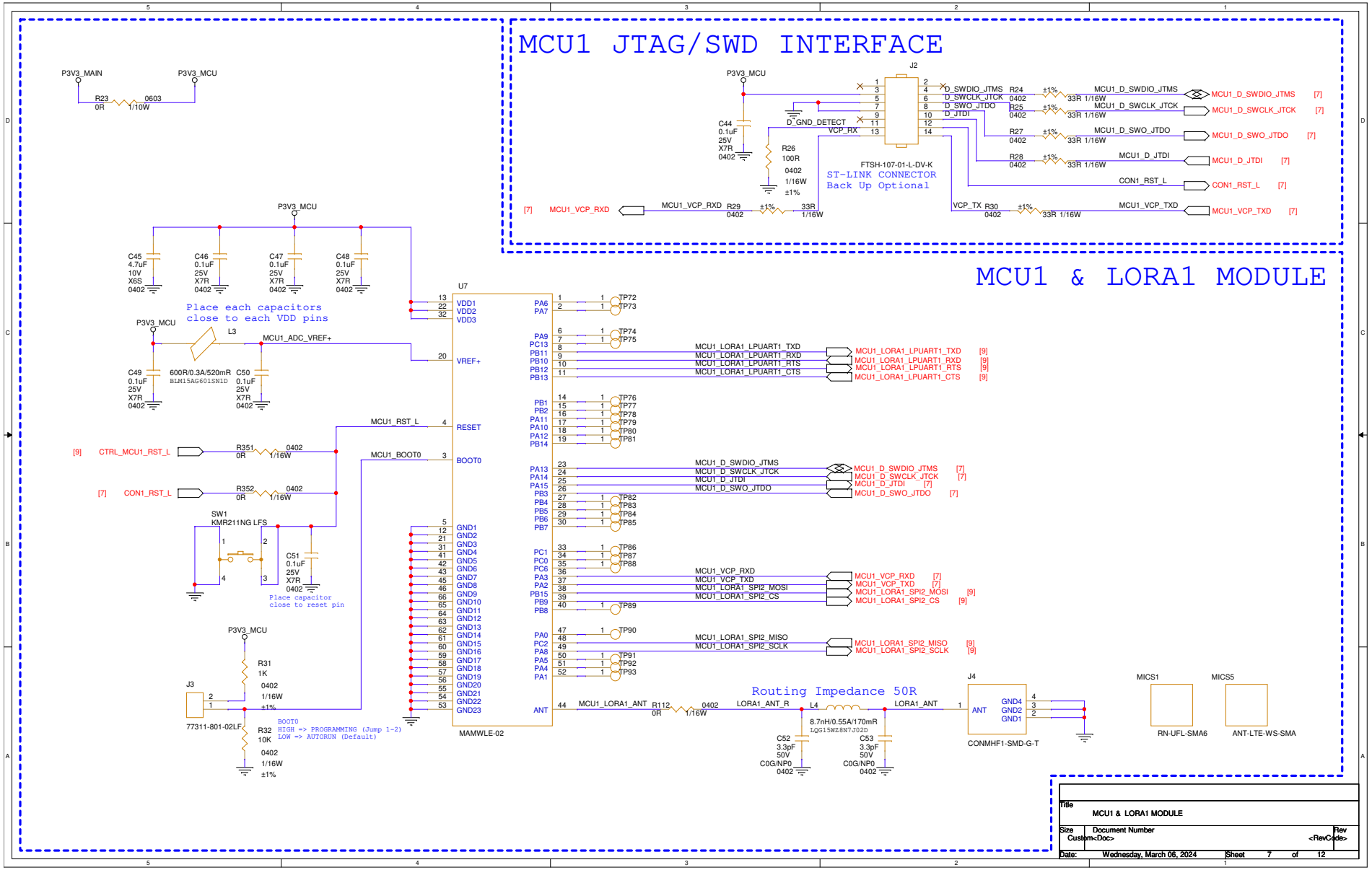
MCU1 JTAG/SWD INTERFACE
MCU1 & LORA1 MODULE
J2
FTSH-107-01-L-DV-K
ST-LINK CONNECTOR
Back Up Optional
D_SWDIO_JTMS
D_SWCLK_JTCK
D_SWO_JTDO
D_JTDI
D_GND_DETECT
VCP_RX
VCP_TX
MCU1_D_SWDIO_JTMS
MCU1_D_SWCLK_JTCK
MCU1_D_SWO_JTDO
MCU1_D_JTDI
CON1_RST_L
MCU1_VCP_RXD
MCU1_VCP_TXD
P3V3_MAIN
P3V3_MCU
R23 0R 0603 1/10W
C44 0.1uF 25V X7R 0402
R26 100R 0402 1/16W ±1%
R24 0402 ±1% 33R 1/16W
R25 0402 ±1% 33R 1/16W
R27 0402 ±1% 33R 1/16W
R28 0402 ±1% 33R 1/16W
R29 0402 ±1% 33R 1/16W
R30 0402 ±1% 33R 1/16W
C45 4.7uF 10V X6S 0402
C46 0.1uF 25V X7R 0402
C47 0.1uF 25V X7R 0402
C48 0.1uF 25V X7R 0402
Place each capacitors
close to each VDD pins
L3
600R/0.3A/520mR
BLM15AG601SN1D
C49 0.1uF 25V X7R 0402
C50 0.1uF 25V X7R 0402
MCU1_ADC_VREF+
U7
MAMWLE-02
VDD1
VDD2
VDD3
VREF+
RESET
BOOT0
GND1
GND2
GND3
GND4
GND5
GND6
GND7
GND8
GND9
GND10
GND11
GND12
GND13
GND14
GND15
GND16
GND17
GND18
GND19
GND20
GND21
GND22
GND23
PA6
PA7
PA9
PC13
PB11
PB10
PB12
PB13
PB1
PB2
PA11
PA10
PA12
PB14
PA13
PA14
PA15
PB3
PB4
PB5
PB6
PB7
PC1
PC0
PC6
PA3
PA2
PB15
PB9
PB8
PA0
PC2
PA8
PA5
PA4
PA1
ANT
MCU1_RST_L
MCU1_BOOT0
[9] CTRL_MCU1_RST_L
R351 0R 0402 1/16W
[7] CON1_RST_L
R352 0R 0402 1/16W
SW1
KMR211NG LFS
C51 0.1uF 25V X7R 0402
Place capacitor
close to reset pin
J3
77311-801-02LF
R31 1K 0402 1/16W ±1%
R32 10K 0402 1/16W ±1%
BOOT0
HIGH => PROGRAMMING (Jump 1-2)
LOW => AUTORUN (Default)
MCU1_LORA1_LPUART1_TXD
MCU1_LORA1_LPUART1_RXD
MCU1_LORA1_LPUART1_RTS
MCU1_LORA1_LPUART1_CTS
MCU1_LORA1_SPI2_MOSI
MCU1_LORA1_SPI2_CS
MCU1_LORA1_SPI2_MISO
MCU1_LORA1_SPI2_SCLK
MCU1_LORA1_ANT
R112 0R 0402 1/16W
LORA1_ANT_R
Routing Impedance 50R
L4
8.7nH/0.55A/170mR
LQG15WZ8N7J02D
C52 3.3pF 50V C0G/NP0 0402
C53 3.3pF 50V C0G/NP0 0402
J4
CONMHF1-SMD-G-T
MICS1
RN-UFL-SMA6
MICS5
ANT-LTE-WS-SMA
Title
MCU1 & LORA1 MODULE
Size
Custom
Document Number
<Doc>
Rev
<RevCode>
Date: Wednesday, March 06, 2024
Sheet 7 of 12

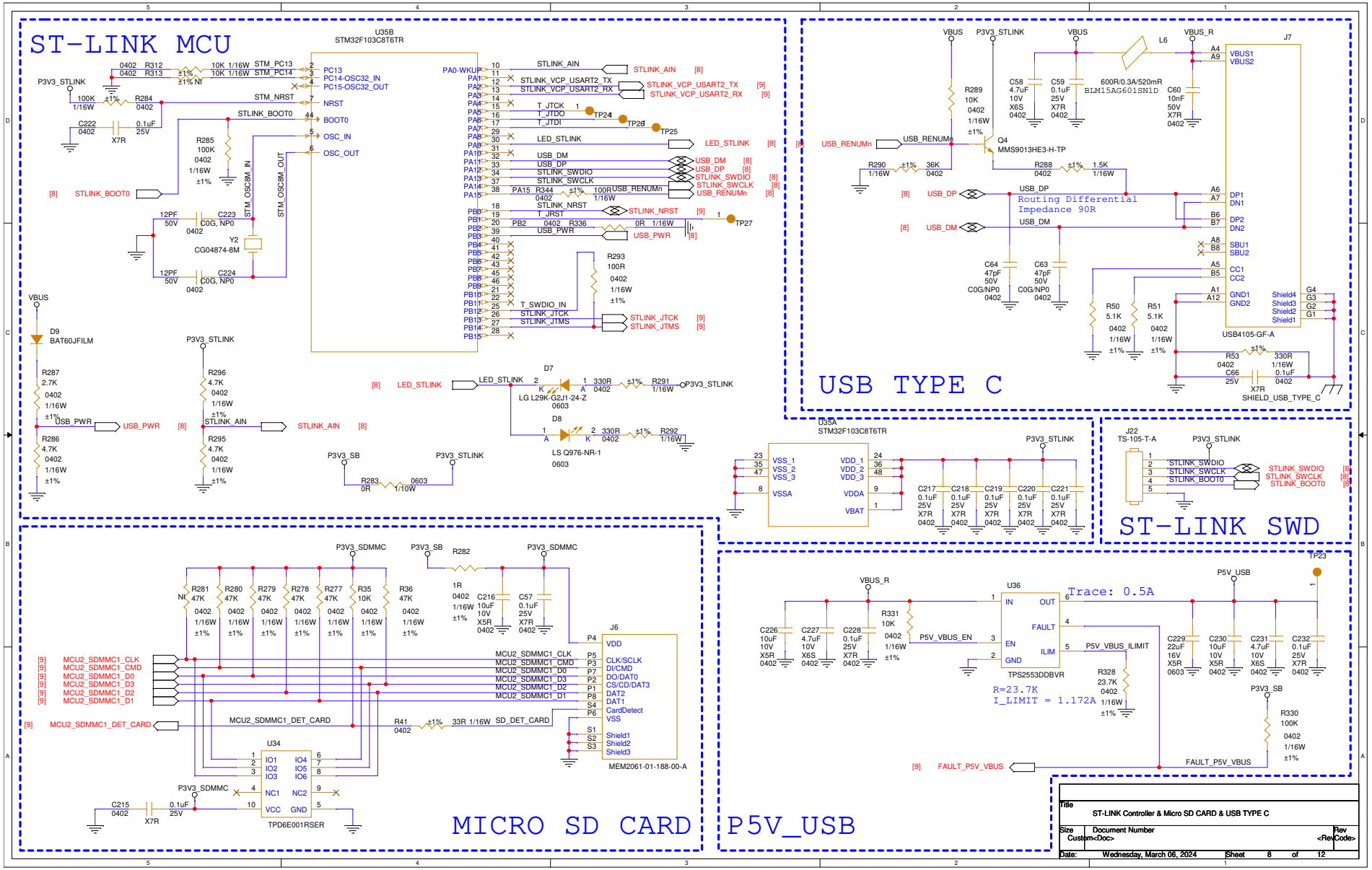
ST-LINK MCU
U35B
STM32F103C8T6TR
PC13
PC14-OSC32_IN
PC15-OSC32_OUT
NRST
BOOT0
OSC_IN
OSC_OUT
STLINK_AIN
STLINK_VCP_USART2_TX
STLINK_VCP_USART2_RX
T_JTCK
T_JTDO
T_JTDI
LED_STLINK
USB_DM
USB_DP
STLINK_SWDIO
STLINK_SWCLK
USB_RENUMn
STLINK_NRST
T_JRST
USB_PWR
T_SWDIO_IN
STLINK_JTCK
STLINK_JTMS
STM_OSC8M_IN
STM_OSC8M_OUT
D9
BAT60JFILM
D7
LG L29K-G2J1-24-Z
D8
LS Q976-NR-1
USB TYPE C
J7
USB4105-GF-A
Routing Differential
Impedance 90R
Q4
MMS9013HE3-H-TP
L6
600R/0.3A/520mR
BLM15AG601SN1D
SHIELD_USB_TYPE_C
U35A
STM32F103C8T6TR
ST-LINK SWD
J22
TS-105-T-A
MICRO SD CARD
J6
MEM2061-01-188-00-A
U34
TPD6E001RSER
P5V_USB
U36
TPS2553DDBVR
Trace: 0.5A
R=23.7K
I_LIMIT = 1.172A
Title
ST-LINK Controller & Micro SD CARD & USB TYPE C
Size
Custom
Document Number
<Doc>
Rev
<RevCode>
Date:
Wednesday, March 06, 2024
Sheet
8
of
12

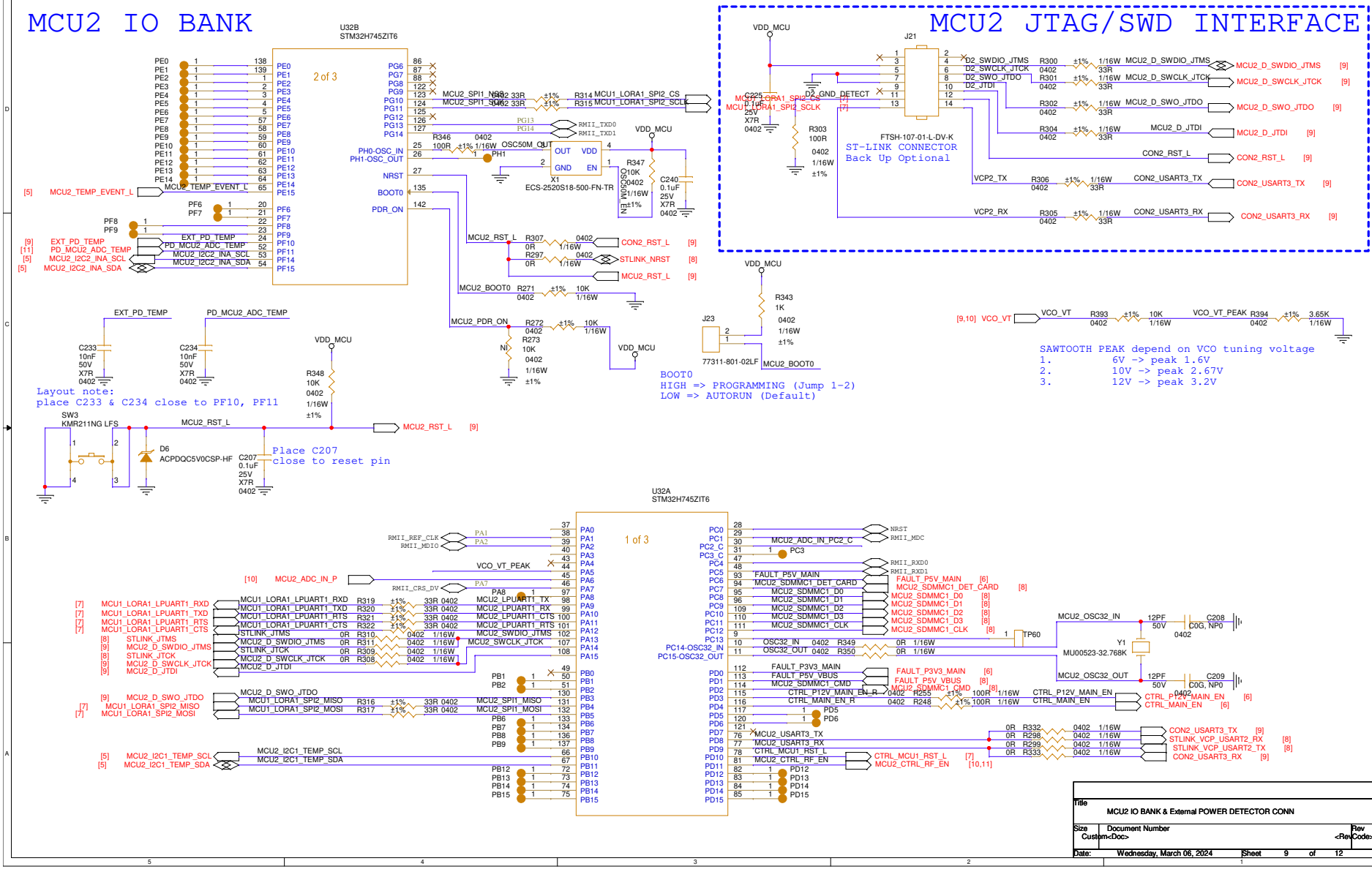
MCU2 IO BANK
MCU2 JTAG/SWD INTERFACE
U32B
STM32H745ZIT6
2 of 3
U32A
STM32H745ZIT6
1 of 3
J21
FTSH-107-01-L-DV-K
ST-LINK CONNECTOR
Back Up Optional
X1
ECS-2520S18-500-FN-TR
J23
77311-801-02LF
BOOT0
HIGH => PROGRAMMING (Jump 1-2)
LOW => AUTORUN (Default)
SAWTOOTH PEAK depend on VCO tuning voltage
1. 6V -> peak 1.6V
2. 10V -> peak 2.67V
3. 12V -> peak 3.2V
Layout note:
place C233 & C234 close to PF10, PF11
Place C207
close to reset pin
SW3
KMR211NG LFS
D6
ACPDQC5V0CSP-HF
Y1
MU00523-32.768K
Title
MCU2 IO BANK & External POWER DETECTOR CONN
Size
Custom
Document Number
<Doc>
Rev
<RevCode>
Date: Wednesday, March 06, 2024
Sheet 9 of 12

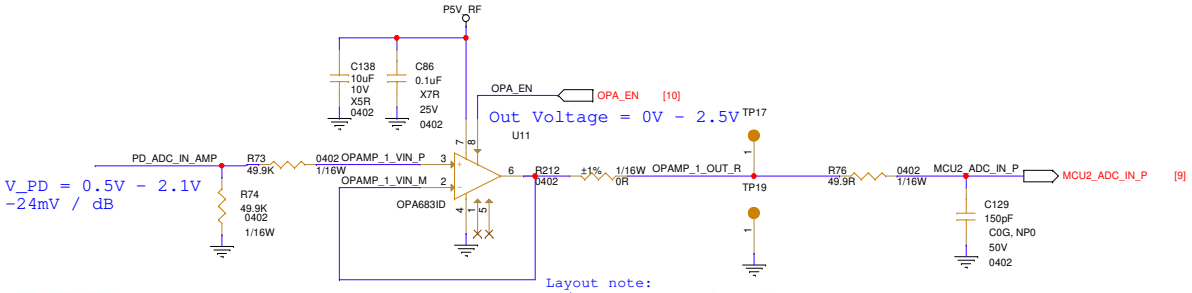

Layout note:
1./ Pleae place R76 & C129
close to MCU's ADC input.
2./ MCU2_ADC_IN_P should
keep as straight & as short as possible

ADC input routing

The ADC voltage source must be placed close to the MCU, and the ADC input tracks must be kept as straight and as short as possible. They must have a ground plane on an adjacent layer.

Adding ground shielding around ADC traces is also recommended, with sufficient vias between the shielding and the ground plane.

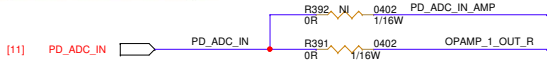

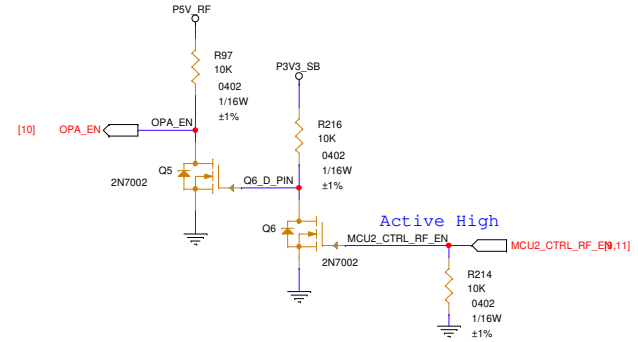

BUFFER ISOLATED

MCU2 POWER BANK

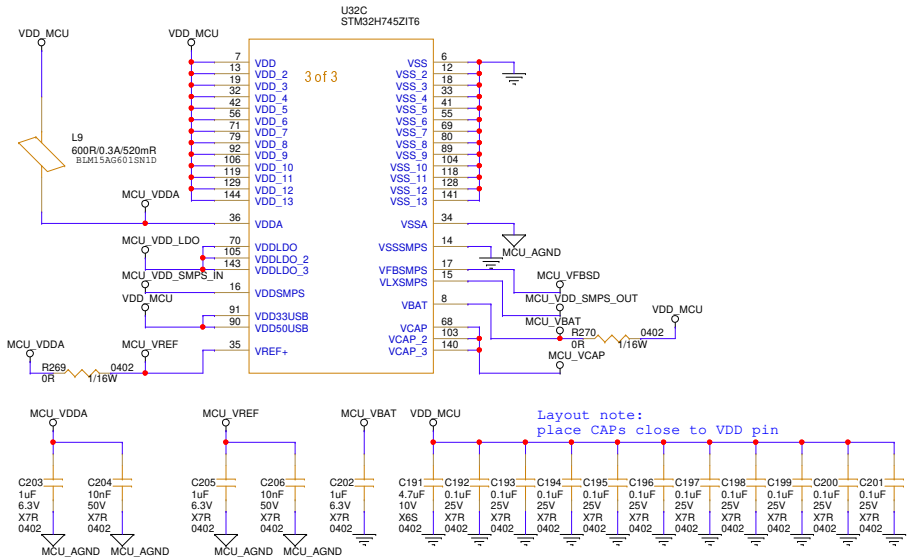

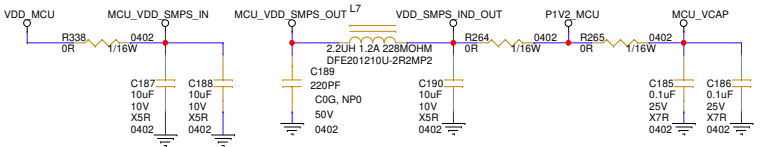

Layout note: C187, C188
place close to VDDSMPS pin

Layout note: C189, L7, C190
place close to VLXSMPS pin

Layout note: C185, C186
place close to VCAP pin

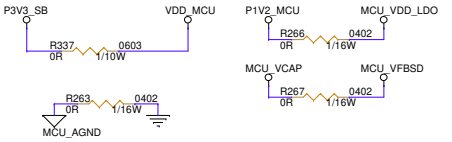

Layout note:
place CAPs close to VDD pin

Title	MCU2 POWER BANK & LORA2 MODULE	
Size: Custom	Document Number: <Doc>	Rev: <RevCode>
Date: Wednesday, March 06, 2024	Sheet 10 of 12	

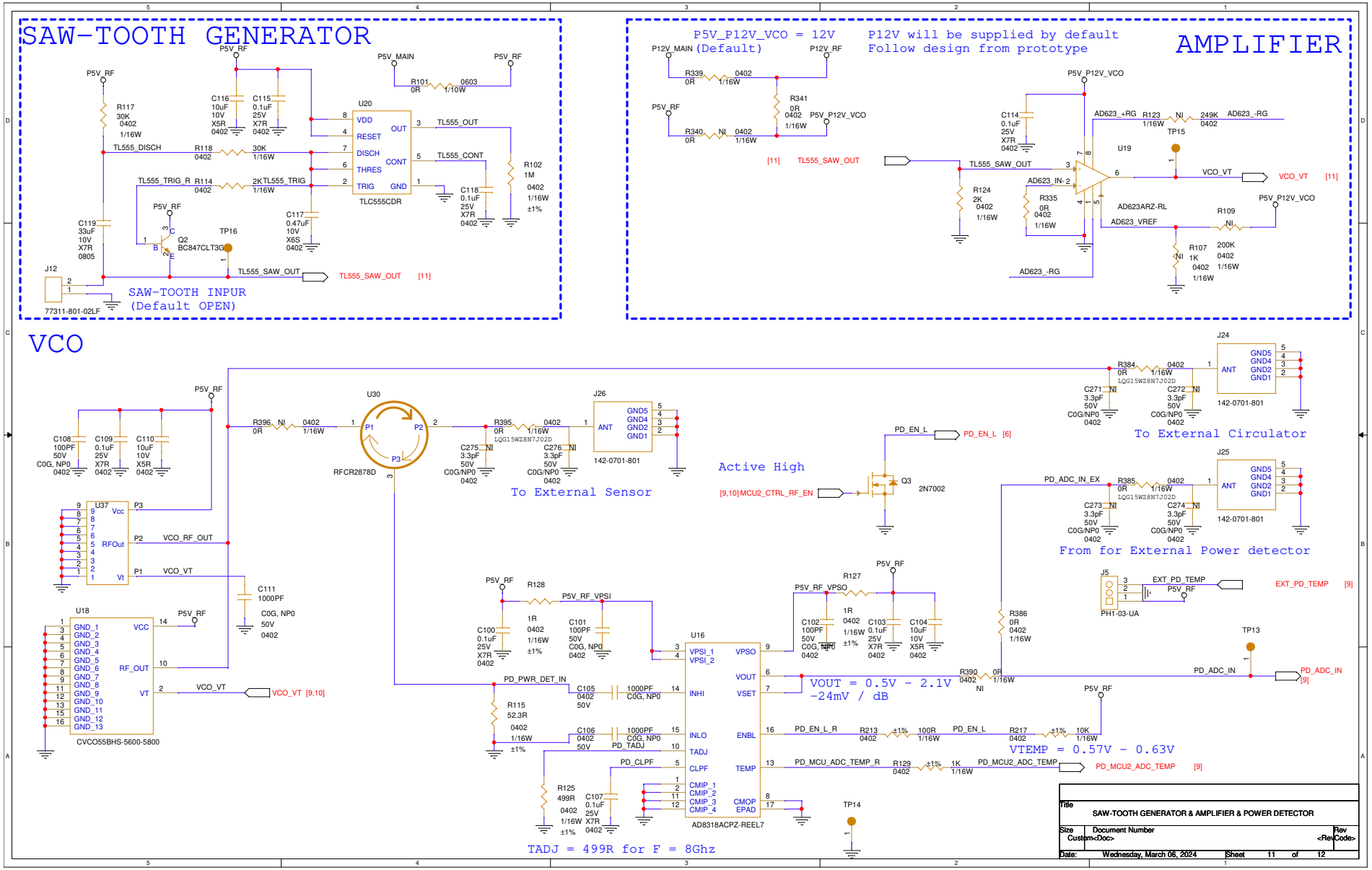
SAW-TOOTH GENERATOR
SAW-TOOTH INPUR
(Default OPEN)
AMPLIFIER
P5V_P12V_VCO = 12V
P12V will be supplied by default
Follow design from prototype
VCO
Active High
To External Sensor
To External Circulator
From for External Power detector
VOUT = 0.5V - 2.1V
-24mV / dB
VTEMP = 0.57V - 0.63V
TADJ = 499R for F = 8Ghz
SAW-TOOTH GENERATOR & AMPLIFIER & POWER DETECTOR
Wednesday, March 06, 2024

CHANGE LIST

DATE	PAGE	CHANGE ITEM	DATE	PAGE	CHANGE ITEM

Title	CHANGE LIST		
Size	Document Number		Rev
Custom	<Doc>		<RevCode>
Date:	Wednesday, March 06, 2024	Sheet 12 of 12	