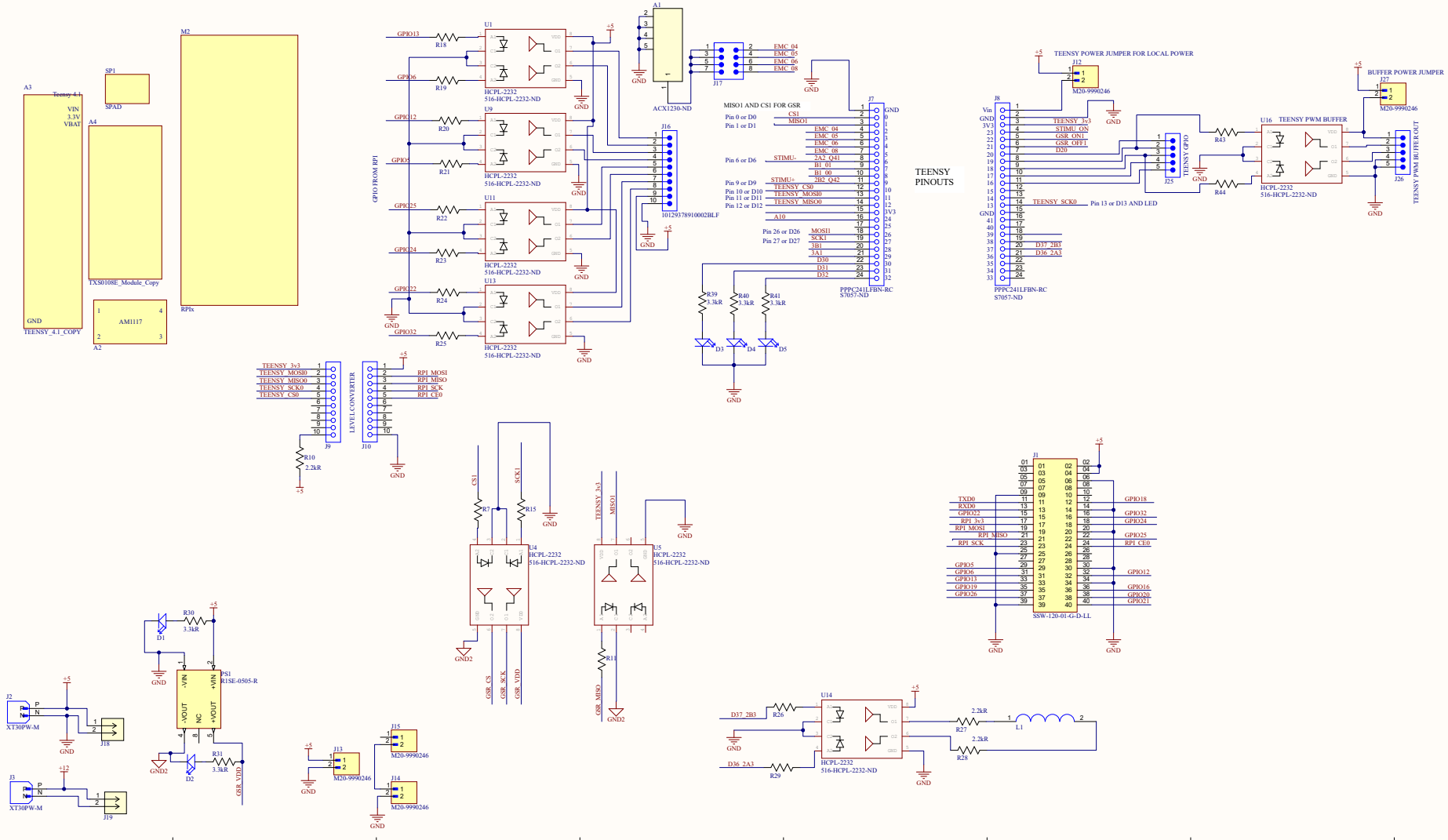
TEENSY PINOUTS
A3
Teensy 4.1
VIN
3.3V
VBAT
GND
TEENSY_4.1_COPY
SP1
SPAD
A4
TXS0108E_Module_Copy
A2
AM1117
M2
RPIx
GPIO FROM RPI
GPIO13
GPIO6
GPIO12
GPIO5
GPIO25
GPIO24
GPIO22
GPIO32
R18
R19
R20
R21
R22
R23
R24
R25
U1
U9
U11
U13
HCPL-2232
516-HCPL-2232-ND
A1
ACX1230-ND
J17
EMC_04
EMC_05
EMC_06
EMC_08
J16
10129378910002BLF
MISO1 AND CS1 FOR GSR
Pin 0 or D0
Pin 1 or D1
Pin 6 or D6
Pin 9 or D9
Pin 10 or D10
Pin 11 or D11
Pin 12 or D12
Pin 26 or D26
Pin 27 or D27
CS1
MISO1
STIMU-
STIMU+
TEENSY_CS0
TEENSY_MOSI0
TEENSY_MISO0
A10
MOSI1
SCK1
3B1
3A1
D30
D31
D32
J7
PPPC241LFBN-RC
S7057-ND
R39
R40
R41
3.3kR
D3
D4
D5
TEENSY POWER JUMPER FOR LOCAL POWER
J12
M20-9990246
J8
Vin
GND
3V3
TEENSY_3v3
STIMU_ON
GSR_ON1
GSR_OFF1
D20
TEENSY_SCK0
Pin 13 or D13 AND LED
D37_2B3
D36_2A3
J25
TEENSY GPIO
R43
R44
U16
TEENSY PWM BUFFER
BUFFER POWER JUMPER
J27
J26
TEENSY PWM BUFFER OUT
TEENSY_3v3
TEENSY_MOSI0
TEENSY_MISO0
TEENSY_SCK0
TEENSY_CS0
J9
LEVEL CONVERTER
J10
RPI_MOSI
RPI_MISO
RPI_SCK
RPI_CE0
R10
2.2kR
CS1
SCK1
R7
R15
U4
U5
GSR_CS
GSR_SCK
GSR_VDD
GSR_MISO
R11
GND2
J1
TXD0
RXD0
GPIO22
RPI_3v3
RPI_MOSI
RPI_MISO
RPI_SCK
GPIO5
GPIO6
GPIO13
GPIO19
GPIO26
GPIO18
GPIO32
GPIO24
GPIO25
RPI_CE0
GPIO12
GPIO16
GPIO20
GPIO21
SSW-120-01-G-D-LL
D1
R30
3.3kR
PS1
R1SE-0505-R
-VIN
+VIN
-VOUT
NC
+VOUT
D2
R31
J2
XT30PW-M
J18
J3
J19
J13
J15
J14
U14
D37_2B3
D36_2A3
R26
R29
R27
R28
2.2kR
L1

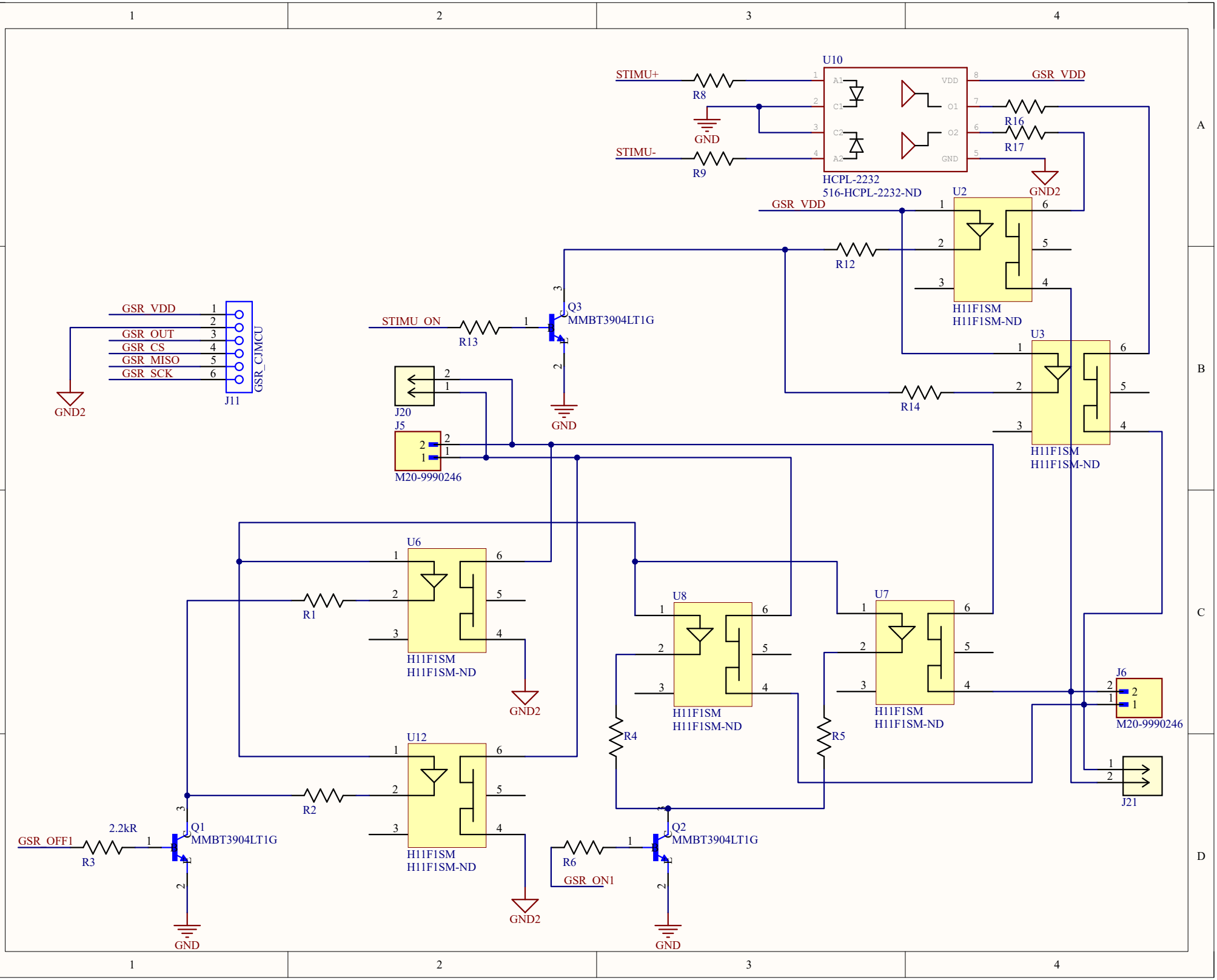
U10
STIMU+
R8
GND
STIMU-
R9
A1
C1
C2
A2
VDD
O1
O2
GND
GSR_VDD
R16
R17
GND2
HCPL-2232
516-HCPL-2232-ND
U2
GSR_VDD
R12
H11F1SM
H11F1SM-ND
U3
R14
H11F1SM
H11F1SM-ND
GSR_VDD
GSR_OUT
GSR_CS
GSR_MISO
GSR_SCK
GSR_CIMCU
J11
GND2
STIMU_ON
R13
Q3
MMBT3904LT1G
GND
J20
J5
M20-9990246
U6
R1
H11F1SM
H11F1SM-ND
GND2
U8
H11F1SM
H11F1SM-ND
U7
H11F1SM
H11F1SM-ND
R4
R5
J6
M20-9990246
J21
U12
R2
H11F1SM
H11F1SM-ND
GND2
GSR_OFF1
2.2kR
R3
Q1
MMBT3904LT1G
GND
R6
GSR_ON1
Q2
MMBT3904LT1G
GND

RF Receiver

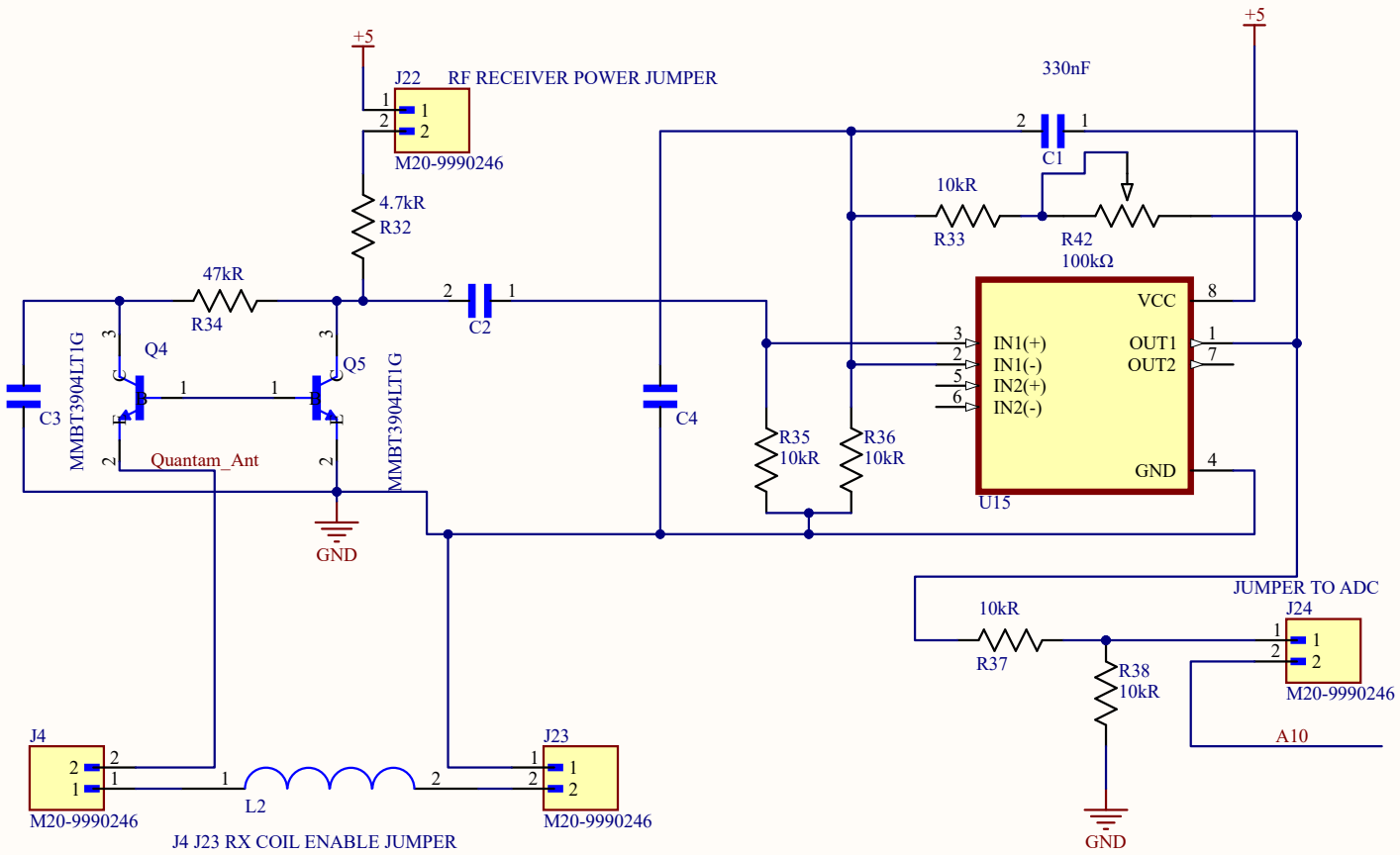
+5
J22
RF RECEIVER POWER JUMPER
M20-9990246
4.7kR
R32
47kR
R34
C2
330nF
C1
10kR
R33
R42
100kΩ
VCC
IN1(+)
IN1(-)
IN2(+)
IN2(-)
OUT1
OUT2
GND
U15
Q4
Q5
MMBT3904LT1G
C3
C4
Quantam_Ant
GND
R35
10kR
R36
10kR
JUMPER TO ADC
J24
10kR
R37
R38
10kR
A10
J4
M20-9990246
L2
J23
M20-9990246
J4 J23 RX COIL ENABLE JUMPER