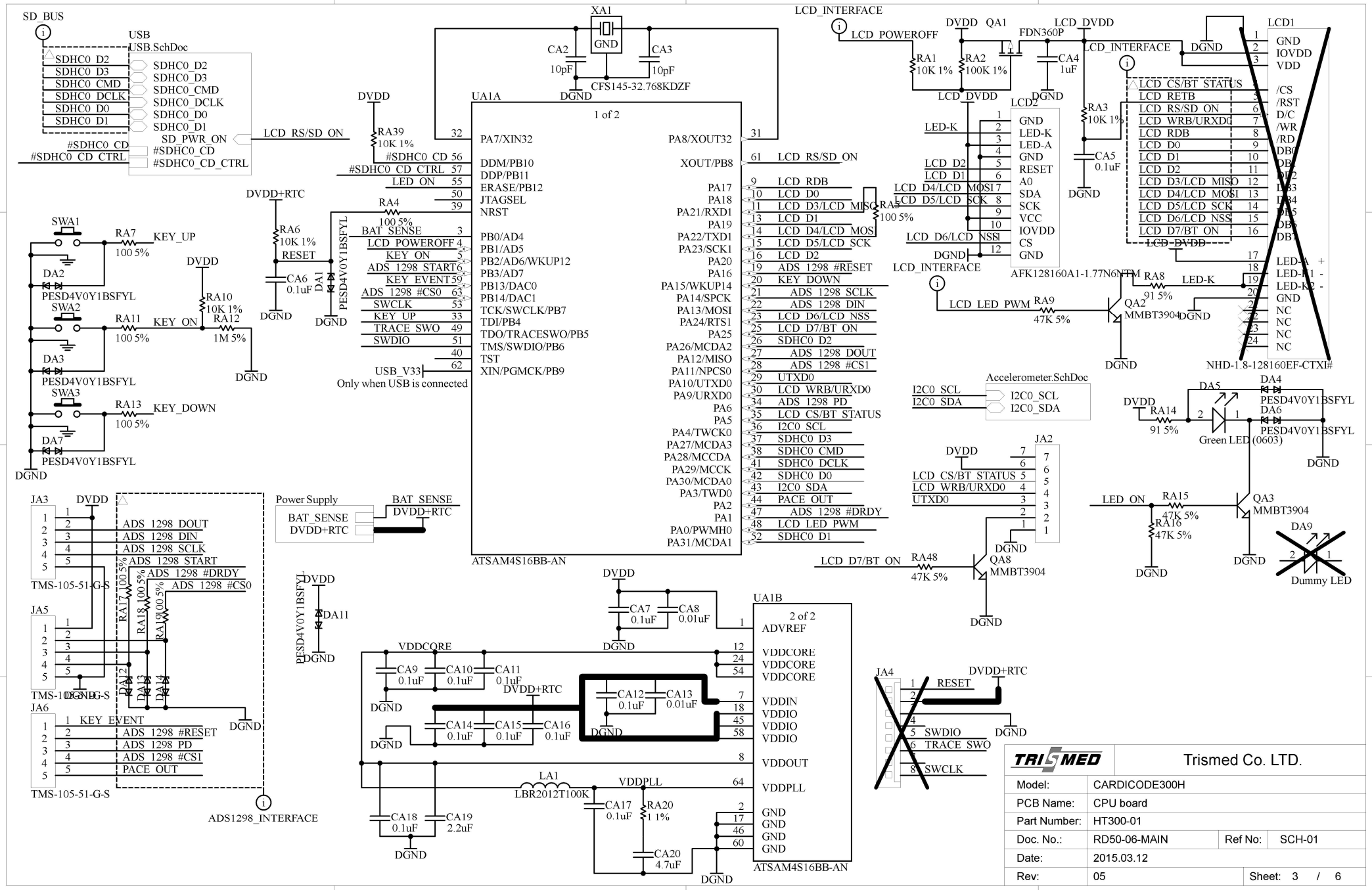
SD_BUS
USB
USB.SchDoc
SDHC0_D2
SDHC0_D3
SDHC0_CMD
SDHC0_DCLK
SDHC0_D0
SDHC0_D1
SD_PWR_ON
#SDHC0_CD
#SDHC0_CD_CTRL
LCD_RS/SD_ON
XA1
GND
CA2
10pF
CA3
10pF
CFS145-32.768KDZF
DGND
DVDD
UA1A
1 of 2
RA39
10K 1%
#SDHC0_CD 56
#SDHC0_CD_CTRL 57
LED_ON 55
50
39
3
LCD_POWEROFF 4
KEY_ON 5
ADS_1298_START 6
KEY_EVENT 59
ADS_1298_#CS0 63
SWCLK 53
KEY_UP 33
TRACE_SWO 49
SWDIO 51
40
USB_V33 62
Only when USB is connected
PA7/XIN32
DDM/PB10
DDP/PB11
ERASE/PB12
JTAGSEL
NRST
PB0/AD4
PB1/AD5
PB2/AD6/WKUP12
PB3/AD7
PB13/DAC0
PB14/DAC1
TCK/SWCLK/PB7
TDI/PB4
TDO/TRACESWO/PB5
TMS/SWDIO/PB6
TST
XIN/PGMCK/PB9
PA8/XOUT32
XOUT/PB8
PA17
PA18
PA21/RXD1
PA19
PA22/TXD1
PA23/SCK1
PA20
PA16
PA15/WKUP14
PA14/SPCK
PA13/MOSI
PA24/RTS1
PA25
PA26/MCDA2
PA12/MISO
PA11/NPCS0
PA10/UTXD0
PA9/URXD0
PA6
PA5
PA4/TWCK0
PA27/MCDA3
PA28/MCCDA
PA29/MCCK
PA30/MCDA0
PA3/TWD0
PA2
PA1
PA0/PWMH0
PA31/MCDA1
LCD_RDB
LCD_D0
LCD_D3/LCD_MISO
LCD_D1
LCD_D4/LCD_MOSI
LCD_D5/LCD_SCK
LCD_D2
ADS_1298_#RESET
KEY_DOWN
ADS_1298_SCLK
ADS_1298_DIN
LCD_D6/LCD_NSS
LCD_D7/BT_ON
SDHC0_D2
ADS_1298_DOUT
ADS_1298_#CS1
UTXD0
LCD_WRB/URXD0
ADS_1298_PD
LCD_CS/BT_STATUS
I2C0_SCL
SDHC0_D3
SDHC0_CMD
SDHC0_DCLK
SDHC0_D0
I2C0_SDA
PACE_OUT
ADS_1298_#DRDY
LCD_LED_PWM
SDHC0_D1
ATSAM4S16BB-AN
SWA1
RA7
100 5%
KEY_UP
DA2
PESD4V0Y1BSFYL
SWA2
RA11
100 5%
KEY_ON
RA12
1M 5%
DA3
PESD4V0Y1BSFYL
SWA3
RA13
100 5%
KEY_DOWN
DA7
PESD4V0Y1BSFYL
DVDD+RTC
RA6
10K 1%
RESET
CA6
0.1uF
DA1
PESD4V0Y1BSFYL
RA4
100 5%
BAT_SENSE
RA10
10K 1%
JA3
TMS-105-51-G-S
ADS_1298_DOUT
ADS_1298_DIN
ADS_1298_SCLK
ADS_1298_START
ADS_1298_#DRDY
ADS_1298_#CS0
RA17
100 5%
RA18
100 5%
RA19
100 5%
JA5
TMS-105-51-G-S
DA12
DA13
DA14
JA6
TMS-105-51-G-S
KEY_EVENT
ADS_1298_#RESET
ADS_1298_PD
ADS_1298_#CS1
PACE_OUT
ADS1298_INTERFACE
Power Supply
BAT_SENSE
DVDD+RTC
DA11
PESD4V0Y1BSFYL
UA1B
2 of 2
ADVREF
VDDCORE
VDDIN
VDDIO
VDDOUT
VDDPLL
GND
CA7
0.1uF
CA8
0.01uF
CA9
0.1uF
CA10
0.1uF
CA11
0.1uF
CA12
0.1uF
CA13
0.01uF
CA14
0.1uF
CA15
0.1uF
CA16
0.1uF
LA1
LBR2012T100K
CA17
0.1uF
RA20
1 1%
CA18
0.1uF
CA19
2.2uF
CA20
4.7uF
ATSAM4S16BB-AN
LCD_INTERFACE
LCD_POWEROFF
RA1
10K 1%
RA2
100K 1%
DVDD_QA1
FDN360P
LCD_DVDD
CA4
1uF
RA3
10K 1%
CA5
0.1uF
LCD2
LED-K
LED-A
GND
RESET
A0
SDA
SCK
VCC
IOVDD
CS
GND
AFK128160A1-1.77N6NTM
LCD_D2
LCD_D1
LCD_D4/LCD_MOSI
LCD_D5/LCD_SCK
LCD_D6/LCD_NSS
RA5
100 5%
LCD_LED_PWM
RA9
47K 5%
QA2
MMBT3904
RA8
91 5%
LCD1
GND
IOVDD
VDD
/CS
/RST
D/C
/WR
/RD
LCD_CS/BT_STATUS
LCD_RETB
LCD_RS/SD_ON
LCD_WRB/URXD0
LCD_RDB
LCD_D0
LCD_D1
LCD_D2
LCD_D3/LCD_MISO
LCD_D4/LCD_MOSI
LCD_D5/LCD_SCK
LCD_D6/LCD_NSS
LCD_D7/BT_ON
LCD_DVDD
LED-A +
LED-K1 -
LED-K2 -
NC
NHD-1.8-128160EF-CTXI#
Accelerometer.SchDoc
I2C0_SCL
I2C0_SDA
JA2
LCD_CS/BT_STATUS
LCD_WRB/URXD0
UTXD0
LCD_D7/BT_ON
RA48
47K 5%
QA8
MMBT3904
DA5
DA4
PESD4V0Y1BSFYL
DA6
PESD4V0Y1BSFYL
RA14
91 5%
Green LED (0603)
LED_ON
RA15
47K 5%
RA16
47K 5%
QA3
MMBT3904
DA9
Dummy LED
JA4
RESET
SWDIO
TRACE_SWO
SWCLK
TRISMED
Trismed Co. LTD.
Model: CARDICODE300H
PCB Name: CPU board
Part Number: HT300-01
Doc. No.: RD50-06-MAIN
Ref No: SCH-01
Date: 2015.03.12
Rev: 05
Sheet: 3 / 6
Form TSM-0730-F03, Rev, 1
A4(297x210)mm