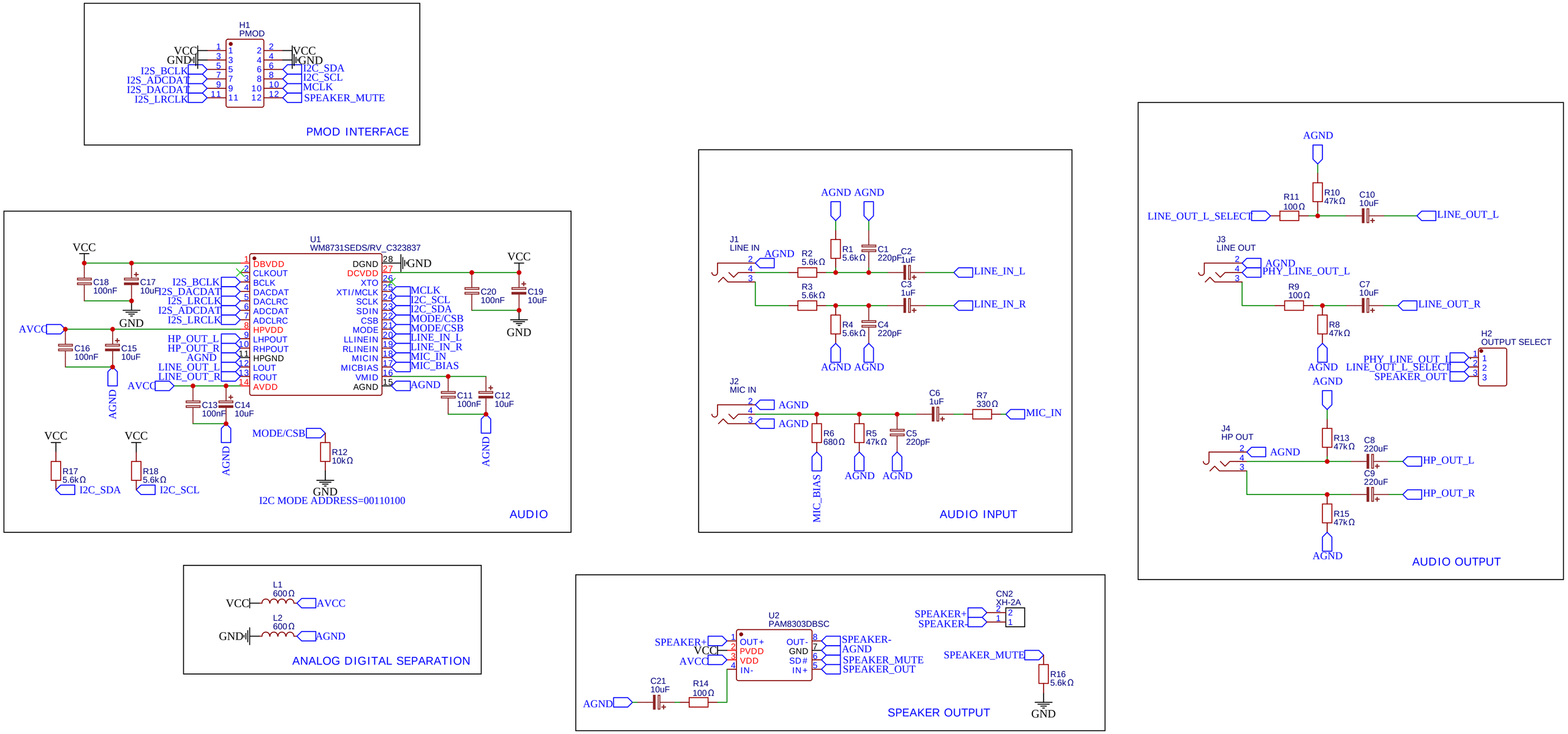
H1
PMOD
VCC
GND
I2S_BCLK
I2S_ADCDAT
I2S_DACDAT
I2S_LRCLK
I2C_SDA
I2C_SCL
MCLK
SPEAKER_MUTE
PMOD INTERFACE
U1
WM8731SEDS/RV_C323837
DBVDD
CLKOUT
BCLK
DACDAT
DACLRC
ADCDAT
ADCLRC
HPVDD
LHPOUT
RHPOUT
HPGND
LOUT
ROUT
AVDD
DGND
DCVDD
XTO
XTI/MCLK
SCLK
SDIN
CSB
MODE
LLINEIN
RLINEIN
MICIN
MICBIAS
VMID
AGND
HP_OUT_L
HP_OUT_R
LINE_OUT_L
LINE_OUT_R
MODE/CSB
LINE_IN_L
LINE_IN_R
MIC_IN
MIC_BIAS
AVCC
C18 100nF
C17 10uF
C16 100nF
C15 10uF
C13 100nF
C14 10uF
C20 100nF
C19 10uF
C11 100nF
C12 10uF
R17 5.6kΩ
R18 5.6kΩ
R12 10kΩ
I2C MODE ADDRESS=00110100
AUDIO
J1
LINE IN
R2 5.6kΩ
R1 5.6kΩ
C1 220pF
C2 1uF
R3 5.6kΩ
C3 1uF
R4 5.6kΩ
C4 220pF
J2
MIC IN
C6 1uF
R7 330Ω
R6 680Ω
R5 47kΩ
C5 220pF
AUDIO INPUT
LINE_OUT_L_SELECT
R11 100Ω
R10 47kΩ
C10 10uF
J3
LINE OUT
PHY_LINE_OUT_L
R9 100Ω
C7 10uF
R8 47kΩ
H2
OUTPUT SELECT
PHY_LINE_OUT_L
LINE_OUT_L_SELECT
SPEAKER_OUT
J4
HP OUT
R13 47kΩ
C8 220uF
C9 220uF
R15 47kΩ
AUDIO OUTPUT
L1 600Ω
L2 600Ω
ANALOG DIGITAL SEPARATION
U2
PAM8303DBSC
OUT+
PVDD
VDD
IN-
OUT-
GND
SD#
IN+
SPEAKER+
SPEAKER-
SPEAKER_MUTE
SPEAKER_OUT
C21 10uF
R14 100Ω
CN2
XH-2A
R16 5.6kΩ
SPEAKER OUTPUT