HybMED: A Hybrid Neural Network Training Processor With Multi-Sparsity Exploitation for Internet of Medical Things

Shiqi Zhao, *Member, IEEE*, Chuanqing Wang, *Student Member, IEEE*, Chaoming Fang, *Student Member, IEEE*, Fengshi Tian, *Student Member, IEEE*, Jie Yang, *Member, IEEE*, and Mohamad Sawan, *Fellow, IEEE*

***Abstract*—Cloud-based training and edge-based inference modes for Artificial Intelligence of Medical Things (AIoMT) applications suffer from accuracy degradation due to physiological signal variations among patients. On-chip learning can overcome this issue by online adaptation of neural network parameters for user-specific tasks. However, existing on-chip learning processors have limitations in terms of versatility, resource utilization, and energy efficiency. We propose HybMED, which is a novel neural signal processor that supports on-chip hybrid neural network training using a composite direct feedback alignment-based paradigm. HybMED is suitable for general-purpose health monitoring AIoMT devices. It improves resource utilization and area efficiency by the reconfigurable homogeneous core with heterogeneous data flow and enhances energy efficiency by exploiting sparsity at different granularities. The chip was fabricated by TSMC 40nm process and tested in multiple physiological signal processing tasks, demonstrating an average improvement in accuracy of 41.16% following online few-shot learning. The chip demonstrates an area efficiency of 1.17 GOPS/mm^2 and an energy efficiency of 1.58 TOPS/W. Compared to the previous state-of-the-art physiological signal processors with on-chip learning, the chip achieves a 65× improvement in area efficiency and 1.48× improvement in energy efficiency, respectively.**

***Index Terms*—Hybrid neural network, on-chip learning, direct feedback alignment, reconfigurable design, neural signal processing, sparsity exploitation.**

Manuscript received 22 December 2023; revised 14 February 2024 and 21 March 2024; accepted 12 April 2024. Date of publication 17 April 2024; date of current version 27 September 2024. This work was supported by the start-up funds from Westlake University and Zhejiang Key R&D Program Project under Grant 2021C03002. This paper was recommended by Associate Editor P. Motto Ros. *(Corresponding authors: Jie Yang; Mohamad Sawan.)*

Shiqi Zhao, Chuanqing Wang, Chaoming Fang, Jie Yang, and Mohamad Sawan are with the Center of Excellence in Biomedical Research on Advanced Integrated-on-chips Neurotechnologies (CenBRAIN Neurotech), School of Engineering, Westlake University, Hangzhou 310024, China, and also with the Institute of Advanced Technology, Westlake Institute for Advanced Study, Hangzhou 310024, China (e-mail: yangjie@westlake.edu.cn; sawan@westlake.edu.cn).

Fengshi Tian is with The Hong Kong University of Science and Technology (HKUST), New Territories, Hong Kong SAR 999077, China.

Digital Object Identifier 10.1109/TBCAS.2024.3389875

I. Introduction

THE widespread use of Internet of Things (IoT) devices has facilitated information exchange between humans and the physical world [1], [2]. These devices serve as intermediaries, equipped with embedded systems including sensors, processors, and communication hardware, to collect, process, and transmit data obtained from the physical world [3]. The Internet of Medical Things (IoMT) is a subset of the IoT that encompasses a network infrastructure of medical devices, systems, and services [4]. By processing physiological signals obtained from the human body, IoMT devices can predict or detect disease-related biomarkers [5]. This enables patients to receive prompt, personalized treatment, improving their experience and increasing the efficiency of medical care and clinical practices.

The advancement of artificial intelligence (AI), particularly neural networks, has led to the growing application of deep neural network (DNN)-based physiological signal processing in IoMT devices, referred to as AIoMT [6]. Neural networks possess remarkable feature extraction and analysis abilities for physiological signals, thereby making DNN-based methods highly accurate for health monitoring [7], [8]. However, compared to traditional processing methods, neural networks necessitate a substantial amount of computation, resulting in elevated energy consumption. To meet the requirements of wearable devices, early DNN operations were typically performed on cloud-based servers, and the processed results were conveyed to the users via edge devices [9]. However, this completely cloud-based computing pattern poses privacy concerns when users upload their private data to the cloud and also experiences real-time issues due to data transmission [10], [11]. To mitigate these issues, some studies have trained DNN models in the cloud and deployed the parameters to edge DNN processors for inference [12], [13], as shown in Fig. 1. By deploying the inference operations from the cloud to the edge, the DNN-based inference-only processors partially mitigate privacy issues and processing latency. Nevertheless, the training data used in the cloud is usually sourced from public datasets, meaning that the models used for inference at the edge are specific to the measurements of the original dataset and may not be suitable for the

1932-4545 © 2024 IEEE. Personal use is permitted, but republication/redistribution requires IEEE permission.
See https://www.ieee.org/publications/rights/index.html for more information.

Authorized licensed use limited to: Westlake University. Downloaded on March 29,2026 at 04:53:11 UTC from IEEE Xplore. Restrictions apply.

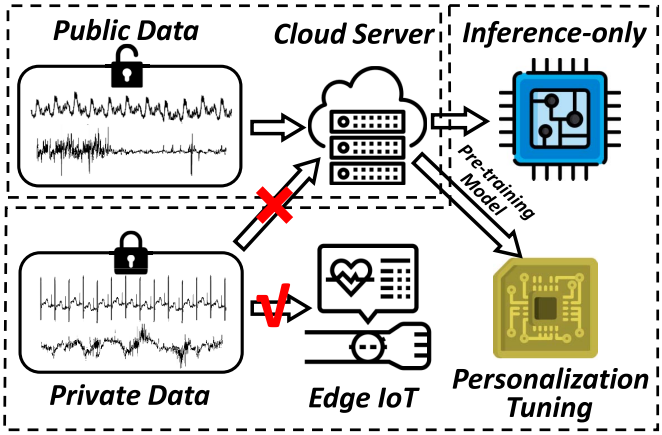

Fig. 1. Application scenario of inference-only and online-tuning AIoMTs.

actual user [14]. The substantial variation in the physiological signal characteristics among patients can result in a significant degradation in accuracy when using the cloud-based training and edge-based inference model [15]. In some cases, the data for cloud-based training is obtained directly from users who do not mind privacy concerns. However, factors such as electrode displacement or changes in the circadian rhythm of patients can greatly impact the processing results. On-chip learning provides a solution to these issues by allowing the neural network parameters to be adjusted online to adapt specifically to user-specific tasks [16].

Despite its potential benefits, the currently available on-chip learning processors for AIoMT applications have several limitations [17], [18], [19]. Firstly, these processors tend to be specialized for processing a single physiological signal task, and are not suitable for general-purpose health monitoring AIoMT devices [17], [18]. Secondly, the integration of training and inference capabilities in these neural signal processors presents challenges in terms of scheduling data streams and efficiently utilizing resources during the design process [15]. Finally, the added computational demands of on-chip training require an energy-efficient design solution [14], [19]. In response to these challenges, this paper proposes a novel neural signal processor HybMED with the following features:

- Composite DFA-based hybrid neural network training to support on-chip training of different kinds of neural networks, making the proposed processor for general-purpose health monitoring applications.
- Reconfigurable homogeneous core and heterogeneous data flow design to enhance the utilization of processor computational resources, resulting in improved area efficiency.
- Sparsity exploitation for different computational paradigms to utilize different granularity of zero values, leading to improved energy efficiency.

In Section II, we review related AIoMT processors with on-chip learning. The key features of the proposed processor are summarized in Section III. In Section IV, the overall architecture and reconfigurable architecture modalities are introduced. Section V highlights the reconfigurable circuit modalities and data reuse. The chip was fabricated in a 40-nm CMOS process, and the measurement results and validation are the object of Section VI, followed by the conclusion and discussion in Section VII.

II. Related Works

Before introducing HybMED, traditional AIoMT chips that support online training will be summarized. Over the past decade, many processors supporting online learning for physiological signal processing have been proposed. In [14], an SVM-based processor utilizing the alternating direction method of multipliers for online training was proposed for epileptic seizure detection. Chua et al. proposed an epileptic seizure detection chip based on logistic regression, supporting on-chip online unsupervised training, achieving an energy efficiency of 1.5 nJ/classification [20]. Although these processors have achieved impressive hardware metrics, the accuracy of these traditional machine learning-based processors is affected or limited to single tasks due to manual feature extraction.

Tsai et al. proposed a neural pattern cluster-based on-chip training processor [19]. However, their implementations are not sufficiently accurate (93.60%) and energy-efficient (28.33 μJ). In [13], a processor based on ANN supporting online adaptive learning was proposed, achieving 0.14-8.31 μJ/inference energy efficiency in anomaly detection tasks. This work used a simple detection threshold updating strategy for online adaptive learning. To better utilize the advantages of ANN in automatically extracting physiological signal features, support for multiple tasks and signal types has become a focus of researchers' attention. Liu et al. proposed a general-purpose ExG processor [21]. Similar to E-G2C, this paper also adopted simple online feature vector updating based on template update and achieved certain effects in multiple physiological signal tasks. In [18], the authors first focused on tasks related to deep brain spike signals and proposed an online learning method based on SNN for epileptic seizure detection tasks. The chip they proposed is based on analog implementation and can only support SNN models of 2×1 neurons based on STDP for online learning. In TBioCAS'22, also based on SNN [17]. However, unlike [18] which used STDP learning mode, the authors here used single-layer backpropagation of ANN for online learning.

Although existing works have achieved decent gains, current physiological signal processors with online learning still face the following deficiencies: Firstly, processors with online learning for physiological signals are often limited to single tasks and signal types [14], [18], [20]. Although [21] proposed a general ExG processor, the processing mode of ExG signals is similar, and there is currently no work focusing on the processing of a full spectrum of physiological signals. Secondly, most existing processors adopt simple online learning implementation methods, such as feature updating or single-layer updating [13], [17], [21]. This greatly affects the accuracy of the processors. The reason for this is that it is difficult to achieve effective online training while meeting the performance requirements of physiological signal processors, and unifying the inference and training processes is relatively complex.

Authorized licensed use limited to: Westlake University. Downloaded on March 29,2026 at 04:53:11 UTC from IEEE Xplore. Restrictions apply.

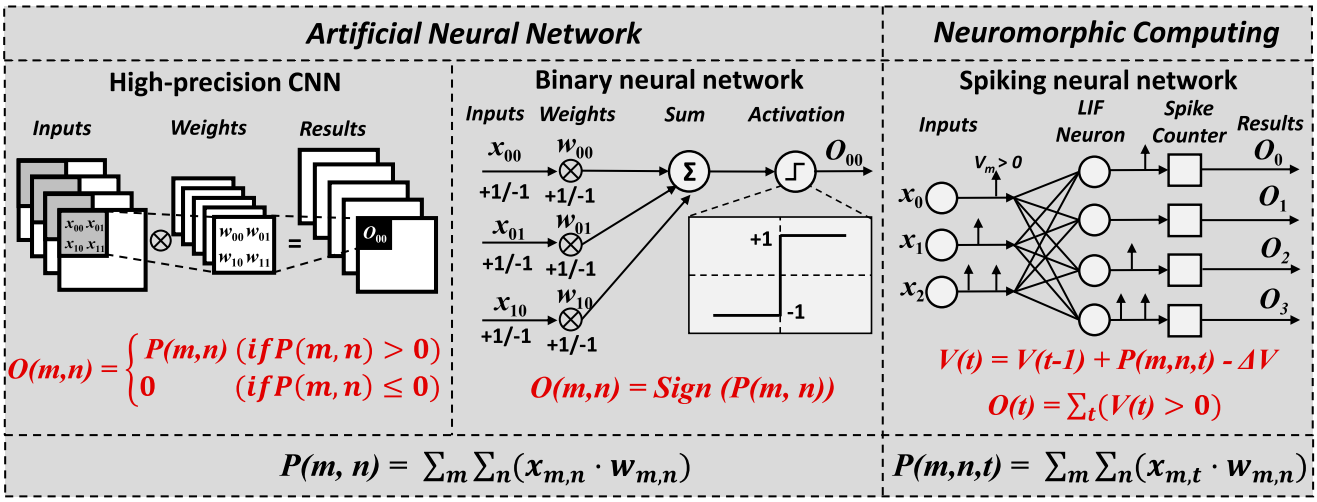

Fig. 2. Hybrid architecture of the proposed processor formed of 3 main neural networks, which are high-precision convolutional, binary, and spiking neural networks.

III. Algorithms Basics

In this section, we introduce the preliminaries for discussions in the subsequent sections, including the hybrid neural network and the composite DFA on-chip learning paradigm used in the proposed processor.

A. Hybrid Neural Network

The physiological signals of the human body can be divided into two main categories: ExG signals and neural spike signals. The characteristics of these two types of signals require different processing modes to extract features efficiently. We adopt a hybrid neural network design that combines the artificial neural network (ANNs) for ExG processing and neuromorphic computing for neural spikes processing.

ExG signals are typically recorded as high-precision values and used as biomarkers for various tasks, such as EEG-based epileptic seizure prediction and ECG-based arrhythmia detection. ANNs, particularly convolutional neural networks (CNNs), have powerful feature extraction capabilities that allow them to efficiently extract task-specific features contained in ExG signals, resulting in highly accurate analysis results. Fig. 2 illustrates the two ANN-based networks, which consist of multiple computational layers stacked for feature extraction and classification, respectively. CNN with 8-bits integer quantization, commonly used in hardware implementations, has little loss in accuracy compared to CNN with floating-point numbers. However, for simple ExG processing tasks or tasks with sparse abnormal events, prolonged usage of high-precision CNN for health monitoring may result in high energy consumption. In such cases, the use of binary neural network (BNN) can be a solution. By quantizing the weights and activation values of high-precision CNN to -1 and +1, BNN brings improvements in memory saving, energy efficiency, and running speed [22]. In this paper, high-precision CNN and BNN can be used for different ExG signal processing tasks or form the event-driven processing mode [23].

Neural spike signals are recorded as 1-bit discrete spike strings, which are ideally suited for the processing methods of spiking neural networks (SNNs) based on neuromorphic computing. Unlike ANNs, SNNs completely mimic biological neural network systems by introducing essential elements such as neurons and synapses to build a brain-like neural network processing mode [24]. When used for general tasks, SNNs require that the input data be encoded into spike strings, and the encoding method is based on the spike distribution of the human brain. Neural spike signals can be directly used as input for SNNs, with each input spike treated as an event to drive the computation of internal neurons. The computation model of SNNs simulates the time-based spike firing and membrane potential change mechanism of biological brains when transmitting the information. In contrast to the frame-driven approach used by ANNs, the main advantage of SNNs in processing neural spike signals is that they use time as an additional input dimension, allowing them to fully exploit spatio-temporal event-based information. Additionally, SNNs record valuable information in a sparse manner, enabling direct event-driven processing.

B. Composite Direct Feedback Alignment

This paper employs a DFA-based approach for on-chip learning implementation. DFA is a biologically plausible neural network training method based on neuroscience [25]. Due to its good performance and hardware-friendly characteristics, it is increasingly being applied to on-chip learning implementations [26]. The DFA-based on-chip learning has several advantages. Firstly, the error generated by the forward calculation is directly passed to all layers that require weights update. This means that the parameters needed to update the weight are local, rather than being passed layer by layer. thereby enabling cross-layer parallel computing. Secondly, DFA calculates the error of each weight using the fixed random feedback connections instead of using transposed forward weights. This can significantly reduce the memory resources and energy consumption associated with

Authorized licensed use limited to: Westlake University. Downloaded on March 29,2026 at 04:53:11 UTC from IEEE Xplore. Restrictions apply.

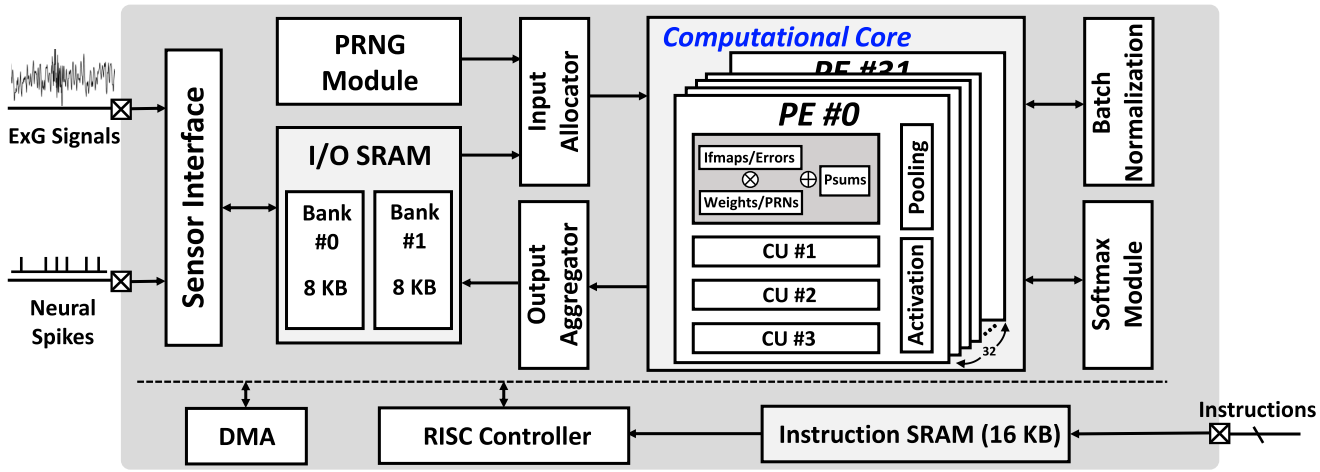

Fig. 3. Architecture of the overall proposed processor.

weight access [27]. Furthermore, random feedback connections can prevent overfitting during network training. Thirdly, DFA can be used effectively for SNN training. Its supervised learning characteristics ensure that the network training is continually directed towards the optimization target, resulting in excellent accuracy [28].

Due to the many advantages of on-chip training in DFA, our design adopts this approach for on-chip learning. Meanwhile, to support on-chip learning of hybrid neural networks on a single architecture, we propose a composite DFA design paradigm. For high-precision CNN training, high-precision DFA is used to achieve the highest accuracy. For BNN training, we utilize a binary DFA (BDFA)-based implementation. This is because during BNN training, the high-precision weights are updated and then transformed into binary values of 0 and 1 during forward propagation. Using high-precision DFA has limited impact on the improvement of accuracy and leads to high resource consumption. To address this issue, BDFA is used, which updates the weight matrix with binary random matrices. For SNN training, we use a sparse DFA (SDFA)-based implementation. Unlike ANN, where only fully connected layers are updated, all layers of SNN can be updated based on the DFA approach. However, as the number of trainable layers increases, the number of parameters and computations that need to be updated also increases. To overcome this problem, we use the SDFA for SNN training, which updates the weight matrix using random sparse matrices.

IV. Overall Architecture and Workload Mapping

In this section, we describe the overall architecture and workload mapping of the proposed processor.

A. Overall Architecture

Fig. 3 shows the architecture of the overall proposed processor. The 32-bit RISC controller fetches instructions from the 16 kB instruction SRAM to regulate the data streaming and computation. The RISC processor is responsible for decoding all instructions, with the portion related to neural network processing sent to the computational core for handling. We retained almost all RISC basic operations, which can support a small number of non-large-scale pipelined vector operations. External input signals or neural spike signals are stored in I/O SRAM through the sensor interface. The I/O SRAM consists of two 8 kB memory banks that operate in a ping-pong manner. The pseudo-random number generator (PRNG) module is used to generate the random feedback matrix required during DFA training. The pseudo-random seed is loaded into the Xoroshiro128+ unit of the PRNG module through the immediate value of instructions [29]. These seeds are then used as inputs to generate various pseudo-random number sequences. The input allocator receives data from the PRNG module and I/O SRAM, and distributes the data to the computational core according to different computing paradigms. The computational core contains the primary computational resources of the processor, with a total of 32 processing elements (PE). Each PE contains four computation units (CU), which are connected to each other to implement reconfigurable pipeline MAC computation in different modes. In addition, each PE includes activation and pooling modules, a peripheral LUT-based softmax module, and batch normalization for neural network-related operations. The results calculated by the computational core are passed back to the I/O SRAM via the output aggregator. During each layer computation, the weights of the current layer are fetched from the I/O buffer for PE mapping. Subsequently, the input fmaps of the current layer are fetched for computation, and the computed results are stored in the I/O buffer. These results are then fetched for computation in the next layer. The weights of all layer are stored in on-chip SRAM and are fetched during the execution of the corresponding layer computation.

B. Homogeneous Core and Heterogeneous Dataflow

Figs. 5–7 illustrates how workloads are mapped to the homogeneous cores for inference and training in three computational paradigms. The proposed processor supports various memory access patterns, PRNG generation modes, data scheduling schemes of the input allocator, and data aggregation modes

Authorized licensed use limited to: Westlake University. Downloaded on March 29,2026 at 04:53:11 UTC from IEEE Xplore. Restrictions apply.

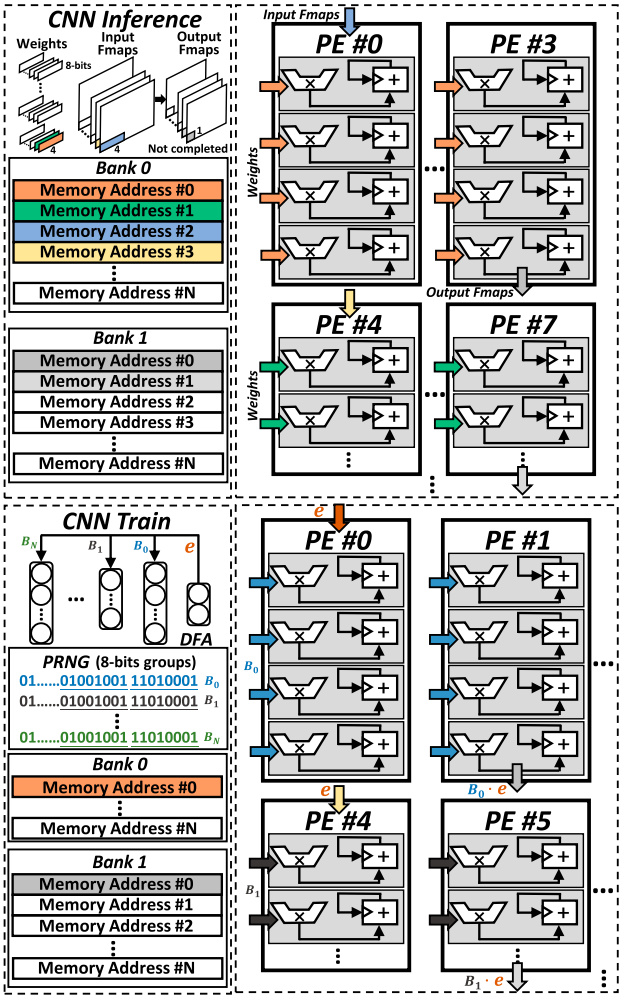

Fig. 4. Workload mapping on the computational core for CNN operation.

of the output aggregator. Detailed architecture of the PE is described in Section IV, while this subsection focuses on how the homogeneous cores operate.

1) Case of CNN: The top panel of Fig. 4 shows the mapping pattern of a standard CNN convolutional layer. It contains N $4\times1\times$M convolution kernels to perform convolutional operations with input feature maps (fmaps) to obtain the incomplete output fmaps. The weights and input fmaps are sequentially stored in bank 0. The PEs are configured for CNN inference computation mode, where each PE can store a fixed 8-bit value and perform MAC operations with a continuous 8-bit sequence. To support the calculation of a 4×1 convolution kernel, every four PEs are sequentially concatenated as a group. The weights are accessed from bank 0 via the input allocator and stored in the register of each PE to exploit their reusability. The four PEs of the first group store the four 8-bit values of $W_{0,0}$, the second group stores $W_{0,1}$, and so on. The corresponding input fmaps are unicast into the first PE of each group. After calculation, the output fmaps are generated by the fourth PE of each group and then sent to the corresponding address of bank 1 via the output aggregator. Since these output fmaps are incomplete, they are then accessed for accumulation to obtain the final results. The mapping pattern of the fully connected layer inference process is similar to that of the convolution layer. The memory access, input and output reorganization, and PE operation mode can be configured according to the number of connected artificial neurons. However, unlike the convolution layer, where the weights are reused multiple times, the weights in the fully connected layer are only used once. Therefore, during PE data mapping, the weights and input fmaps switch freely according to the connection mode.

The bottom panel of Fig. 4 shows the mapping pattern of training operations in the CNN mode. The loss e generated in the inference process is directly transferred to each hidden layer through fixed random feedback matrices (B_0, $B_1 \cdots B_n$). The values of the random feedback matrices are 8-bit fixed-point numbers, and their dimensions are determined by the number of neurons in the output layer and the updated layer. To reduce the memory access and energy consumption of the error propagation, the PRNG module is used to generate the random number sequences. These random number sequences are rearranged into 8-bit groups to compose the random feedback matrices with corresponding dimensions. These random feedback matrices are configured in the core by the input allocator. Each PE can be configured with an 8-bit value, and every two adjacent PEs are connected as a pair to represent the two output neurons. The error e is copied to load to the first PE of each pair simultaneously and propagated to the next PE along with the partial sum. The two adjacent PEs complete the calculation of $B \cdot e$, and the calculation results are stored in memory bank 1 via the output aggregator. The mapping of operations from $B \cdot e$ to δW is similar to that of the fully connected layer, which is determined by the dimensions of the multipliers and multiplicands involved in the operations.

2) Case of BNN: The mapping pattern for BNN inference is depicted in the top panel of Fig. 5. Similar to the CNN case, we use the same network structure, with 1-bit matrices for weights and input feature maps, and partial results in the form of output feature maps obtained after the XNOR and one-count operations. The 1-bit weights and activations are rearranged into 4-bit groups according to the size of the convolution kernel ($4\times1\times$M), and these groups are placed in sequence in bank 0. The PEs are configured for BNN inference, with each PE capable of calculating the XNOR and one-count results of four pairs of 1-bit numbers. Therefore, to support the 4x1 convolution operation, each PE is configured independently. The weights are pre-stored in PEs in turn, and the input fmaps are fetched according to the strides and broadcast to each PE in a column-wise manner. To maximize data reuse, the weights are sequentially performed XNOR operation with input fmaps changed per cycle. Then, the XNOR results perform one-count operation over four cycles. The incomplete convolution output (O_0, O_1...) is generated by the last CU of each PE. These one-count results need to be calculated by peripheral modules and stored in bank 1 after obtaining complete convolution outputs.

For BNN training, we adopt the binary direct feedback alignment (BDFA). The mapping pattern of the BDFA operations is shown in the bottom panel of Fig. 5. In BDFA, The elements of the random feedback matrices are represented by 1-bit numbers.

Authorized licensed use limited to: Westlake University. Downloaded on March 29,2026 at 04:53:11 UTC from IEEE Xplore. Restrictions apply.

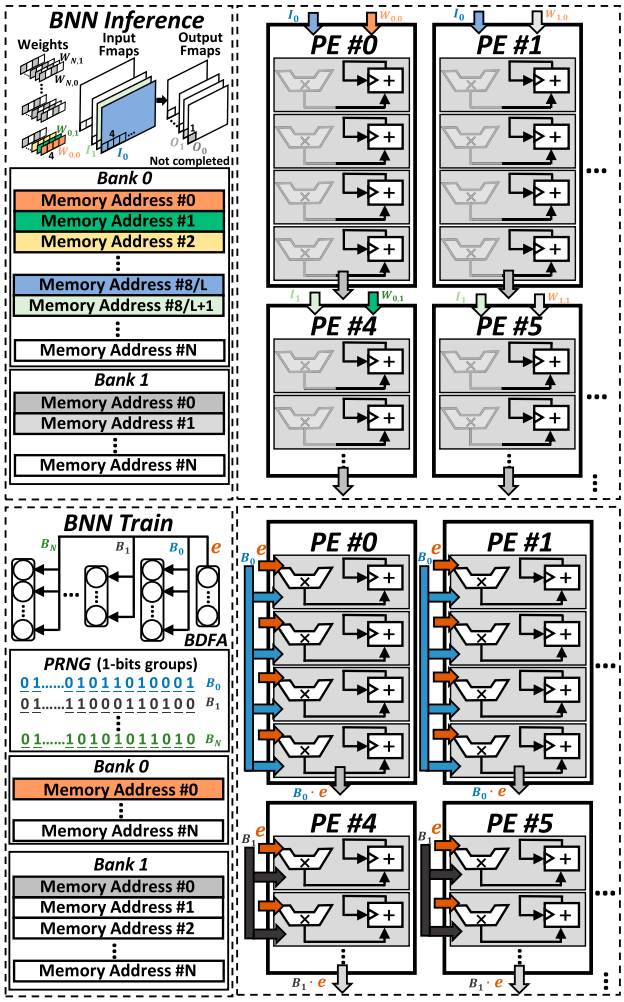

Fig. 5. Workload mapping on the computational core for BNN operation.

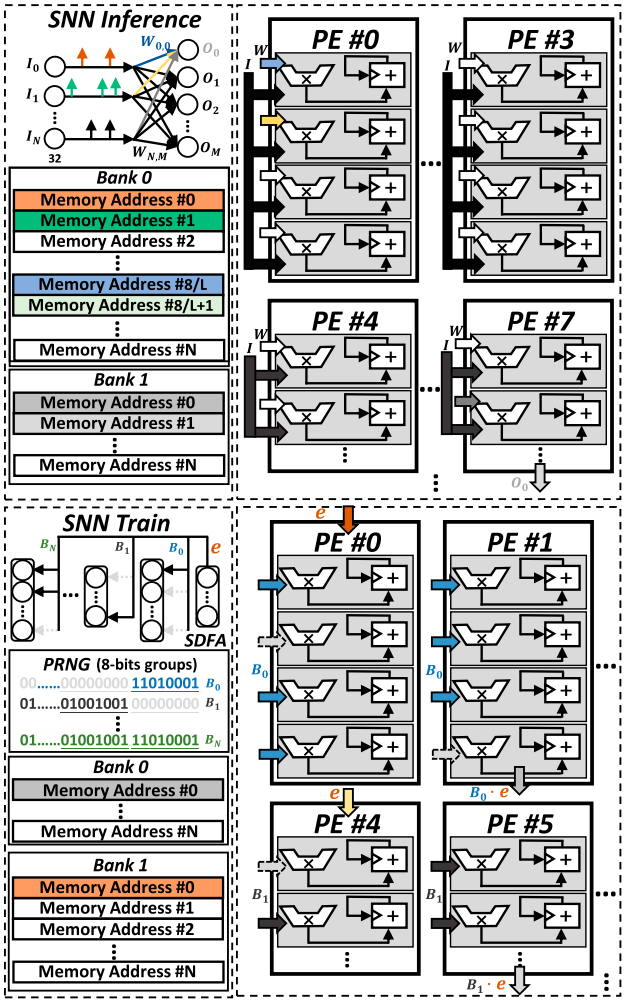

Fig. 6. Workload mapping on the computational core for SNN operation.

The random number sequence generated by the PRNG module is rearranged into binary random feedback matrices. Each PE is configured to work independently, and the error e is fetched from bank 0 and then copied by the input allocator to be pre-stored in the PEs. Next, the binary random feedback matrices are broadcast 1-bit by 1-bit to the four CUs of each PE, which determine whether the pre-stored e is accumulated along the CU. All PEs perform calculations synchronously, and the calculation results of $B \cdot e$ are stored in bank 1.

3) Case of SNN: Fig. 6 illustrates the mapping pattern for inference and training of an SNN. The SNN takes 1-bit spike strings as input and 8-bit matrices as weights, which are stored sequentially in bank 0. The input layer contains 32 neurons that accumulate the membrane potentials of M neurons by firing spikes. After configuring the PEs for SNN inference, each PE can be viewed as a post-synaptic neuron that connects four pre-synaptic neurons. To support the fully connected operation of 32 pre-synaptic neurons, every 8 PEs are connected to form a large post-synaptic neuron. Prior to calculation, the weights are pre-stored in the corresponding PEs in order. The spike sequence is then broadcast to all CUs of the PE, and the pre-stored weights are accumulated as spikes arrive. The accumulation result is propagated along the PE chain until all input spikes are calculated. The partial results are obtained by the last CU of the eighth connected PE, and are calculated through the LIF module in the PE to obtain the final results (whether to fire or not).

In contrast to the on-chip training of CNN and BNN modes, which fix the parameters of the convolution layer and only update the weights of the fully connected layer, the entire SNN architecture is composed of fully connected layers, and therefore all parameters can be updated by DFA. However, the overall learning entails a significant on-chip computational overhead, and hence we adopt sparse DFA for SNN-based training. The random feedback matrices of SDFA are 8-bit sparse matrices, which are generated by the PRNG module with a configurable sparsity. Similar to the training process of CNN, each two adjacent PEs are connected as a pair, and the sparse random feedback matrices are configured to the core via the input allocator. Then, the error e is copied to the first PE of each pair at the same time, and the partial sum is propagated along CUs. Since the random feedback matrices are sparse, most operations can be skipped through sparse exploitation, and the details are introduced in the next section.

Authorized licensed use limited to: Westlake University. Downloaded on March 29,2026 at 04:53:11 UTC from IEEE Xplore. Restrictions apply.

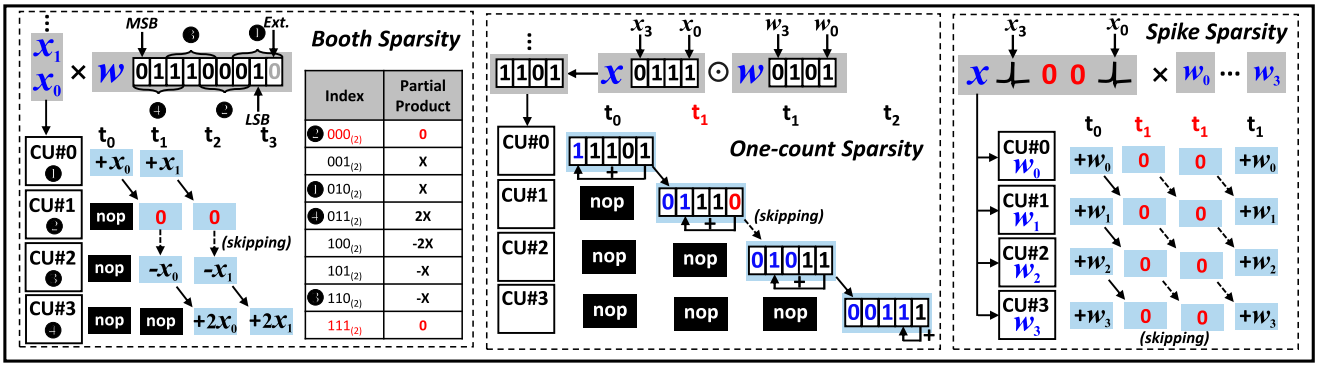

Fig. 7. Three computational paradigms with sparsity exploitation.

V. Circuit Design of the Proposed Processor

In this section, we introduce the circuit design of the proposed processor, including sparsity-aware computational paradigms and the detailed circuit of PE.

A. Sparsity-Aware Computational Paradigms

Fig. 7 illustrates the proposed three computational paradigms with sparsity exploitation. Booth multiplication with Booth-level sparsity exploitation is used for the multiplication of the 8-bit multiplicand x and the 8-bit multiplier y. The multiplier y with zero-extention is split into four Booth multipliers (BM), each of which undergoes processing in a separate CU. At time t_0, the first multiplicand x_0 is loaded into the PE, and the BM (010) in the first CU is used to encode x_0 to obtain the accumulated sum $+x_0$. At time t_1, the second multiplicand x_1 enters the first CU, while x_0 and the accumulated sum are sent to the second CU. When the Booth multipliers stored in a CU are (000 or 111), the partial product of the CU is 0. Then the calculation of this CU will be skipped. As in the case of Fig. 7(a), x_0 and the accumulated sum are directly sent to the third CU to complete the subsequent calculation.

The computational paradigm shown in Fig. 7(b) is used for spike-driven SNN computation and MAC of 1-bit multiplicand x with 8-bit multiplier y. The four multipliers ($y_0 ... y_3$) are placed in four CUs, respectively. If the multiplicand x is 1 (x_0 and x_3 in Fig. 7(b)), it is broadcasted to each CU, so that the multiplier of each CU is accumulated. The accumulation result is then forwarded. If the multiplicand is 0, each CU skips the corresponding cycle calculation based on the number of connected "0"s until the next "1" of the multiplicand. The old accumulation is directly transferred to the CU after the connected "0" number of CUs. After the last input "1" of the multiplicand is calculated, the complete accumulation is finished.

Fig. 7(c) illustrates the computational pattern of 1-bit multiplicand x and 1-bit multiplier y. The x and y consist of 4 pairs of 1-bit numbers, which undergo XNOR operations in the PE. The results of XNOR are sent to the first CU for one-count calculation. In each CU, the received XNOR result is shifted right one bit. If the LSB is 1, it is added to the one-count result of the idle bit. If the LSB is 0, the calculation of this cycle is skipped, the received result is shifted one more bit to the right, and the one-count result of the idle bit remains unchanged. The calculation is done until the right shift of the XNOR result is accumulated to the last bit.

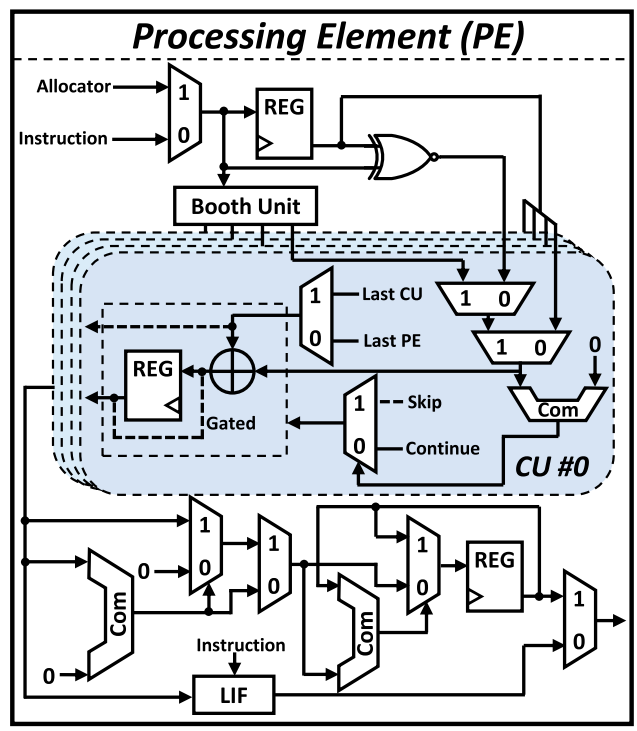

Fig. 8. Detailed circuit implementation of PE.

B. Detailed Circuit of PE

The circuit design of homogeneous PE uses a reconfigurable approach to support multiple computational paradigms. Fig. 8 illustrates the detailed circuit implementation of PE. The circuit of the four CUs is shown inside the dashed line and the shared circuit of CUs is shown outside the dashed line. The PE receives the immediate part of the instruction to configure the corresponding modules. Weights, input fmaps or errors either from

Authorized licensed use limited to: Westlake University. Downloaded on March 29,2026 at 04:53:11 UTC from IEEE Xplore. Restrictions apply.

memory or generated by the PRNG are sent to the PE via the input allocator. These values have three scenarios: 1) They can be loaded into the Booth Unit to produce the Booth multipliers, which are then sent to the four CUs, respectively. 2) They can be stored in the register of PEs and then broadcast to the four CUs 1-bit per cycle. 3) They can be stored in the register of the PE and performed XNOR operations with the values received in the following cycles. The calculation results are sent to the first CU.

The values from the above three scenarios are passed to the CU with different sparsity levels. The operands controlled by instruction decoding control the corresponding multiplexing logic, selecting one among Booth, XNOR, or spike inputs obtained from the PE shared circuit. Comparator is used to determine whether the value is sparse. If the CU receives a sparse value, the calculation of this CU is skipped, the register is gated, and the received partial sum from the previous CU or the previous PE is directly transmitted to the next CU. If the received value is not sparse, this CU performs Booth partial sum accumulation, multiplier accumulation, or one-count accumulation. The result is stored in the register and transmitted to the next CU in the following cycle. Once the calculation of the four CUs is completed, the output is transmitted to the shared circuit.

The shared circuit contains activation functions for different types of network and circuit implementations for the pooling layer. The threshold activation function for BNN is implemented through a comparator. The ReLU activation function in CNN is implemented through the comparator as a selector of control signals. The LIF neuron of SNN contains a membrane potential register to store the membrane potential of the neuron and a configuration register to configure the threshold value of membrane potential firing. For the pooling layer, an additional level of pipeline registers is introduced to store the output values. If the newly arrived output value in the pooling window is greater than the value in the register, the previous value is overwritten, thus completing the max pooling operation.

VI. Measurement and Validation

A. Chip Specification and Verification System Setup

The test system for the proposed processor is shown at the top of Fig. 9, which mainly consists of a real-time graphical user interface (GUI), a test PCB connecting the Xilinx VCU118 FPGA to the chip with a test socket, an oscilloscope, and a power supply. The GUI is used to visualize the waveforms of physiological signals, load instructions and data to the chip, and display the processing results returned by the chip. The PCB is connected to the chip via the test socket and to the FPGA via the FMC interface, while the FPGA communicates with the host PC via the PCIe interface. The processor is implemented in TSMC 40-nm standard CMOS process, and the chip micrograph is shown in Fig. 9. The design occupies an area of 1.7 mm × 0.90 mm. Fig. 10 presents the voltage-frequency scaling and energy efficiency at different sparsity of the chip. Under 0.6-0.93V supply voltage, the power is 1.2-20.8 mW. The highest energy efficiency is achieved under 0.6V supply voltage and 500 kHz frequency. The right figure illustrates the peak energy efficiency

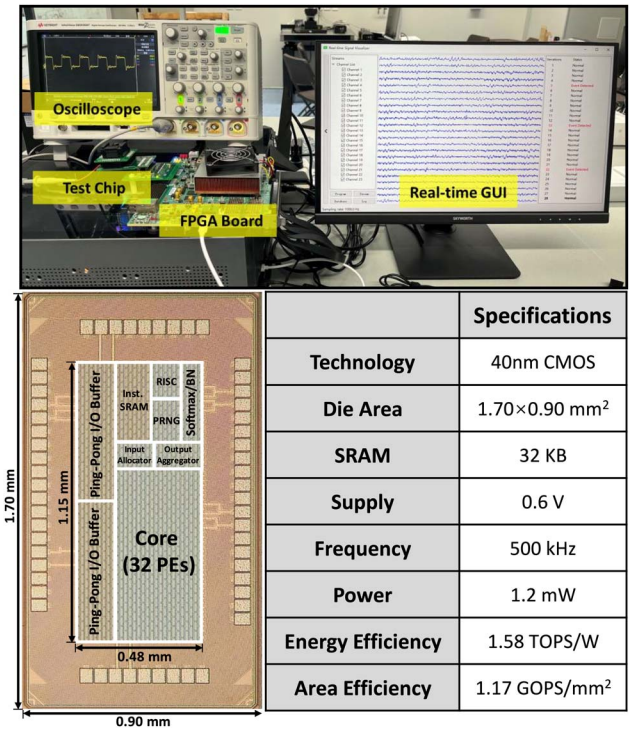

	Specifications
Technology	40nm CMOS
Die Area	1.70×0.90 mm²
SRAM	32 KB
Supply	0.6 V
Frequency	500 kHz
Power	1.2 mW
Energy Efficiency	1.58 TOPS/W
Area Efficiency	1.17 GOPS/mm²

Fig. 9. Test platform, chip photograph, and performance summary.

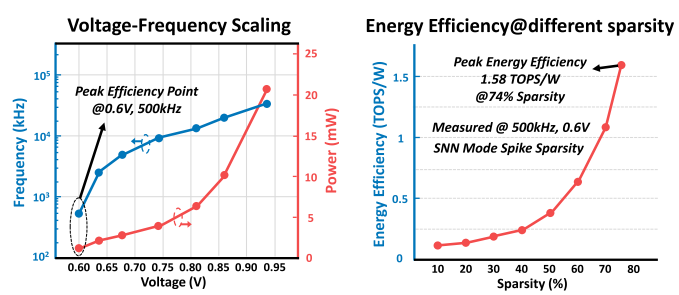

Fig. 10. Voltage-frequency scaling and energy efficiency at different sparsity of the chip.

of our chip at various sparsity levels. Due to the omission of unnecessary operations, networks with higher sparsity result in higher energy efficiency. Our chip achieved the highest energy efficiency of 1.58 TOPS/W at 74% sparsity, which is the highest sparsity of the model for supported tasks.

B. Validation and Performance Evaluation

We tested the proposed chip using three physiological signal processing tasks. The first is the epileptic seizure prediction (ESP) task based on EEG. The CHB-MIT dataset is adopted, which contains 23 scalp EEG measurements collected at a 256 Hz sampling rate from 22 patients [30]. Among these records, 15 measurements are obtained using fixed 23 electrodes, and they are applied to test our chip. The parameters of the preictal interval length (PIL) and seizure prediction horizon (SPH) (the period between the seizure onset and the preictal interval) are set to one hour and five minutes, respectively. All preictal and

Authorized licensed use limited to: Westlake University. Downloaded on March 29,2026 at 04:53:11 UTC from IEEE Xplore. Restrictions apply.

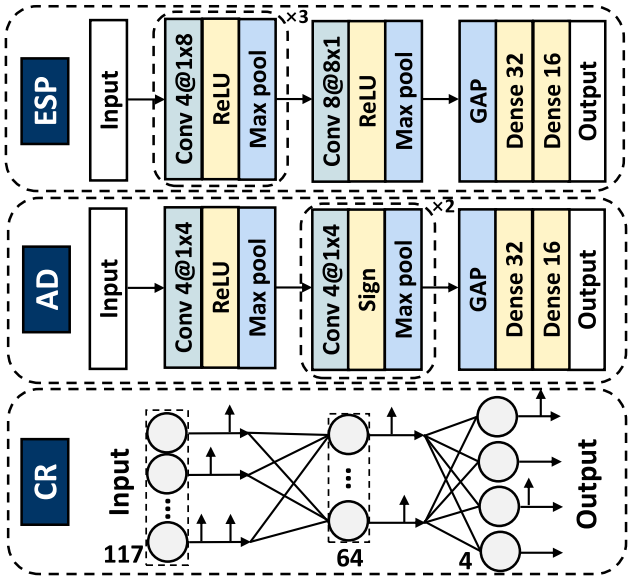

Fig. 11. Network structures of EEG-based epileptic seizure prediction, ECG-based arrhythmia detection, and spikes-based center-out reaching tasks.

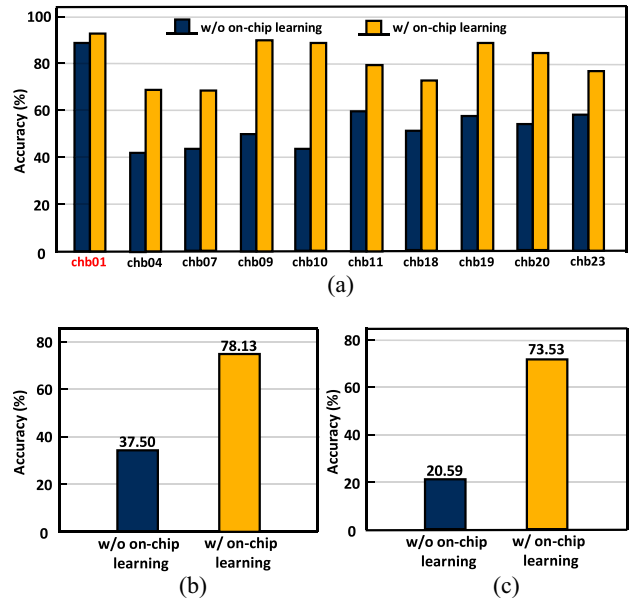

Fig. 12. Classification accuracy of independent testing w/ and w/o on-chip learning in (a) EEG-based ESP, (b) ECG-based AD, and (c) spikes-based CR tasks.

interictal data were divided into samples with 5-second trial length. The second task is the ECG-based arrhythmia detection (AD). The MIT-BIH dataset is adopted in this work, which contains ECG data from a total of 47 subjects collected at a 360 Hz sampling rate [31]. These ECG signals can be divided into five categories: non-ectopic beats samples, ventricular ectopic beats samples, supraventricular ectopic beats samples, fusion beats samples, and unknown beats samples. To overcome the issue of data imbalance, we randomly selected 800 samples from each category except for unknown beats samples as experimental data. The trial length is 1 second. The third task is the center-out reaching (CR) based on LFP signals. The dataset was collected from a macaque by ourselves. The macaque was trained to move a central cursor to the upper, lower, left, or right cursor on the screen by operating a rocking bar. The 96-channel LFP signals of macaque were recorded at a 30 kHz sampling rate. These LFP signals were subsequently processed through spike sorting to generate neural spike signals of 117 neurons.

Fig. 11 shows the neural network architectures used for the three tasks. The one used for the EEG-based ESP task is an 8-bit quantized CNN. It consists of four convolutional modules, with the first three used for temporal convolution and the fourth for spatial convolution. This is followed by a global average pooling (GAP) layer and three fully connected layers. The architecture for the ECG-based AD task consists of three convolutional modules, with the first being an 8-bit quantized convolution and the following two being binary convolution modules. It also includes a GAP layer and three fully connected layers. The architecture for the LFP-based CR task is a three-layer fully connected SNN. The first layer has 117 input neurons, a hidden layer with 64 neurons, and finally, four output neurons. The network models for the tasks were obtained through customized neural architecture search after incorporating hardware requirements constraints. For optimization, we adopt the Adam optimizer with learning with learning rate, $\beta 1$ and $\beta 2$ of 1e-5, 0.9, 0.999 respectively. We trained each model with a fixed epoch number of 150.

Fig. 12 presents the performance improvement during the on-chip learning process for the three tasks. Specifically, for EEG-based ESP, we pre-train the model based on the chb01 samples in the cloud and fine-tune the pre-trained model for different patients, which simulates real-world cloud-based training and online personal data adaption. The online fine-tuning process utilizes a batch size of eight and is performed on 10 batches. As shown in Fig. 12(a) the accuracy of chb01 increased by 6% after fine-tuning. However, due to the patient-specific nature of physiological signals, the average accuracy of other patients using the chb01 pre-trained model for inference is only 49.9%. After rapid online adaptation, the average accuracy increases to 79.8%. Regarding the ECG-based AD task, Fig. 12(b) compares the results with random initialization and results after fine-tuning. The online fine-tuning process is performed with a batch size of four on 10 batches. Fine-tuning based on BDFA results in the 40.63% improvement in accuracy. Lastly, for the LFP-based CR task, the results with random initialization are compared to the results after fine-tuning. The online fine-tuning process utilizes a batch size of eight and was performed on 20 batches. Fine-tuning based on SDFA realizes a 52.94% improvement in accuracy.

C. Comparison With the State-of-the-Art Works

Table I displays the performance comparison between the proposed processor and state-of-the-art physiological signal processing processors with on-chip learning. In JSSC'20, an SVM-based processor was proposed for EEG-based epileptic seizure detection, which supports on-chip learning based on

Authorized licensed use limited to: Westlake University. Downloaded on March 29,2026 at 04:53:11 UTC from IEEE Xplore. Restrictions apply.

TABLE I
COMPARISON WITH PRIOR-ART PUBLICATIONS

	JSSC'20 [14]	TBioCAS'22 [17]	J.Phys.D'22 [18]	TBioCAS'23 [21]	ISSCC'23 [19]	This Work
Technology	40 nm	28 nm	180 nm	65 nm	40 nm	**40 nm**
Die Area	2.55 mm^2	0.54 mm^2	0.15 mm^2	1.74 mm^2	6 mm^2	**1.53 mm^2**
Supply Voltage	0.58 V	0.57 V	0.2 V	0.75 V	0.9 V	**0.6 V**
Clock Frequency	130 kHz	250 kHz	6 kHz	2.5 MHz	512 Hz	**500 kHz**
Classifier	SVM	SNN MLP	SNN	CNN	CNN	**CNN BNN SNN**
Online Training	ADMM	One Layer Backpropagation	STDP	Template Update	NPC[a]	**Composite DFA**
Signal Type	ExG	ExG	Spike	ExG	ExG	**ExG Spike**
Tasks	EEG-ESD[b]	ECG-AD	LFP-ESD	EEG-ESD ECG-AD EMG-GR	EEG-ESD	**EEG-ESP ECG-AD LFP-CR**
Performance	ESD: 96.60%	AD: 98.60%	N/A	ESD: 99.84% AD: 99.30% GR: 85.13%	ESD: 93.60%	**ESP: 98.65% AD: 99.33% CR: 91.35%**
Normalized Energy (μJ/class)	ESD: 170.9	AD: 0.3	ESD: 0.35	ESD: 2.06 AD: 2.25 GR: 5.25	ESD: 28.33	**ESP: 2.85 AD: 1.48 CR: 1.96**
Max Energy Efficiency (TOPS/W)	N/A	0.048[c]	N/A	1.07[c]	N/A	**1.58**
Max Area Efficiency (GOPS/mm^2)	N/A	0.0001[d]	N/A	0.018[d]	N/A	**1.17**

[a] Neural pattern cluster (NPC); [b] Epileptic seizure detection (ESD); [c] Estimated according to the clock frequency, computing power, and normalized energy of the original papers [15], [17]; [d] Estimated according to the die area, clock frequency, computing power, and normalized energy of the original papers [15], [17].

the alternating direction method of multipliers (ADMM) algorithm [14]. However, it only achieved a power consumption of 1.9 mW and an energy consumption of 170 μJ/class. In TbioCAS'22, the authors proposed an arrhythmia detector that combines SNN inference and ANN learning, achieving 97.35% accuracy after on-chip learning with single-layer training [17]. However, its network architecture is limited to a four-layer fully connected network, resulting in an estimated energy efficiency of only 0.048 TOPS/W. In J.Phys. D'22, they designed an LFP-based seizure detector based on SNN, which supports on-chip learning based on STDP, but its network architecture is a very small SNN with only 2×1 neurons [18]. Due to its fully-analog implementation, it achieves very low power consumption. Liu et al. proposed a general-purpose ExG processor, which achieves high inference accuracy with the minimal power of 30 μW and energy efficiency in μJ level [21]. However, it uses a very simple on-chip training approach, which only updates the feature vector based on template update, making their processor available only for on-chip learning of simple tasks. Tsai et al. proposed a neural pattern cluster-based on-chip training processor [19]. However, their implementations are not good enough in terms of accuracy (93.60%) and normalized energy (28.33 μJ). The design presented in this paper is the first processor that supports both training and inference for ExG and spike signals. The chip achieves a minimum power consumption of 1200 μW at 0.6V supply voltage and 500 kHz clock frequency. It also achieves accuracies of 98.65%, 99.33%, and 91.35% in EEG-based ESP, ECG-based AD, and LFP-based CR tasks, respectively. Compared to prior-art works, the proposed processor can perform more complex (ESP) and cross-signal (spike and ExG) physiological signal processing tasks with μJ-level normalized energy. It has the highest energy efficiency 1.58 TOPS/W and the highest area efficiency 1.17 GOPS/mm^2, achieving improvements of 1.48x and 65x compared to previous works. In addition, the energy efficiency of the proposed chip surpasses that of the Nvidia Jetson Xavier NX (1.4 TOPS/W), which is designed as a GPU for edge applications [32].

VII. CONCLUSION

In this paper, we presented a novel neural signal processor HybMED that supports on-chip training of different kinds of neural networks for AIoMT applications. The proposed processor overcomes the accuracy degradation caused by physiological signal variations among patients by using a DFA-based hybrid neural network training scheme. We also propose a reconfigurable homogeneous core with a heterogeneous data flow design to enhance resource utilization and a model-adaptive sparsity exploitation to improve energy efficiency. The proposed processor is suitable for general-purpose health monitoring AIoMT devices, surpassing all prior-art works in terms of energy efficiency and area efficiency.

Authorized licensed use limited to: Westlake University. Downloaded on March 29,2026 at 04:53:11 UTC from IEEE Xplore. Restrictions apply.

REFERENCES

[1] G. Sivapalan, K. K. Nundy, S. Dev, B. Cardiff, and D. John, "ANNet: A lightweight neural network for ECG anomaly detection in IoT edge sensors," *IEEE Trans. Biomed. Circuits Syst.*, vol. 16, no. 1, pp. 24–35, Feb. 2022.

[2] L. Portilla et al., "Wirelessly powered large-area electronics for the Internet of Things," *Nature Electron.*, vol. 6, no. 1, pp. 10–17, 2023.

[3] F. Khan, M. A. Jan, R. Alturki, M. D. Alshehri, S. T. Shah, and A. ur Rehman, "A secure ensemble learning-based fog-cloud approach for cyberattack detection in IoMT," *IEEE Trans. Ind. Inform.*, vol. 19, no. 10, pp. 10125–10132, Oct. 2023.

[4] C. Chen, B. da Silva, C. Yang, C. Ma, J. Li, and C. Liu, "AutoMLP: A framework for the acceleration of multi-layer perceptron models on FPGAs for real-time atrial fibrillation disease detection," *IEEE Trans. Biomed. Circuits Syst.*, vol. 17, no. 6, pp. 1371–1386, Dec. 2023.

[5] H. Daoud and M. A. Bayoumi, "Efficient epileptic seizure prediction based on deep learning," *IEEE Trans. Biomed. Circuits Syst.*, vol. 13, no. 5, pp. 804–813, Oct. 2019.

[6] S. Pandya, H. Ghayvat, P. K. Reddy, T. R. Gadekallu, M. A. Khan, and N. Kumar, "COUNTERSAVIOR: AIoMT and IIoT enabled adaptive virus outbreak discovery framework for healthcare informatics," *IEEE Internet Things J.*, vol. 10, no. 5, pp. 4202–4212, Mar. 2023.

[7] S. Zhao, J. Yang, and M. Sawan, "Energy-efficient neural network for epileptic seizure prediction," *IEEE Trans. Biomed. Eng.*, vol. 69, no. 1, pp. 401–411, Jan. 2022.

[8] D. Wu, S. Zhao, J. Yang, and M. Sawan, "Software-hardware co-design for energy-efficient continuous healthmonitoring via task-aware compression," *IEEE Trans. Biomed. Circuits Syst.*, vol. 17, no. 2, pp. 180–191, Apr. 2023.

[9] X. Chen, M. Li, H. Zhong, Y. Ma, and C.-H. Hsu, "DNNOff: Offloading DNN-based intelligent IoT applications in mobile edge computing," *IEEE Trans. Ind. Inform.*, vol. 18, no. 4, pp. 2820–2829, Apr. 2022.

[10] C. Fang, C. Wang, S. Zhao, F. Tian, J. Yang, and M. Sawan, "A 510μW 0.738-mm2 6.2-pJ/SOP online learning multi-topology SNN processor with unified computation engine in 40-nm CMOS," *IEEE Trans. Biomed. Circuits Syst.*, vol. 17, no. 3, pp. 507–520, Jun. 2023.

[11] S. Zhao, C. Fang, J. Yang, and M. Sawan, "Emerging energy-efficient biosignal-dedicated circuit techniques: A tutorial brief," *IEEE Trans. Circuits Syst. II, Exp. Briefs*, vol. 69, no. 6, pp. 2592–2597, Jun. 2022.

[12] S. Yin et al., "A 1.06-μW smart ECG processor in 65 nm CMOS for real-time biometrie authentication and personal cardiac monitoring," *IEEE J. Solid-State Circuits*, vol. 54, no. 8, pp. 2316–2326, Aug. 2019.

[13] Y. Zhao et al., "e-G2C: A 0.14-to-8.31 μJ/inference NN-based processor with continuous on-chip adaptation for anomaly detection and ECG conversion from EGM," in *Proc. IEEE Symp. VLSI Technol. Circuits (VLSI Technol. Circuits)*, Piscataway, NJ, USA: IEEE Press, 2022, pp. 252–253.

[14] S.-A. Huang, K.-C. Chang, H.-H. Liou, and C.-H. Yang, "A 1.9-mW SVM processor with on-chip active learning for epileptic seizure control," *IEEE J. Solid-State Circuits*, vol. 55, no. 2, pp. 452–464, Feb. 2020.

[15] J. Liu et al., "4.5 BioAIP: A reconfigurable biomedical AI processor with adaptive learning for versatile intelligent health monitoring," in *Proc. IEEE Int. Solid-State Circuits Conf. (ISSCC)*, vol. 64, Piscataway, NJ, USA: IEEE Press, 2021, pp. 62–64.

[16] M. Zhang, L. Zhang, C.-W. Tsai, and J. Yoo, "A patient-specific closed-loop epilepsy management SoC with one-shot learning and online tuning," *IEEE J. Solid-State Circuits*, vol. 57, no. 4, pp. 1049–1060, Apr. 2022.

[17] R. Mao et al., "An ultra-energy-efficient and high accuracy ECG classification processor with SNN inference assisted by on-chip ANN learning," *IEEE Trans. Biomed. Circuits Syst.*, vol. 16, no. 5, pp. 832–841, Oct. 2022.

[18] M. Ronchini et al., "A CMOS-based neuromorphic device for seizure detection from LFP signals," *J. Phys. D Appl. Phys.*, vol. 55, no. 1, 2021, Art. no. 014001.

[19] C.-W. Tsai et al., "SciCNN: A 0-shot-retraining patient-independent epilepsy-tracking SoC," in *Proc. IEEE Int. Solid-State Circuits Conf. (ISSCC)*, Piscataway, NJ, USA: IEEE Press, 2023, pp. 488–490.

[20] A. Chua, M. I. Jordan, and R. Muller, "SOUL: An energy-efficient unsupervised online learning seizure detection classifier," *IEEE J. Solid-State Circuits*, vol. 57, no. 8, pp. 2532–2544, Aug. 2022.

[21] J. Liu et al., "An ultra-low power reconfigurable biomedical AI processor with adaptive learning for versatile wearable intelligent health monitoring," *IEEE Trans. Biomed. Circuits Syst.*, vol. 17, no. 5, pp. 952–967, Oct. 2023.

[22] H. Qin, R. Gong, X. Liu, X. Bai, J. Song, and N. Sebe, "Binary neural networks: A survey," *Pattern Recognit.*, vol. 105, 2020, Art. no. 107281.

[23] S. Zhao, J. Yang, J. Wang, C. Fang, T. Liu, S. Zhang, and M. Sawan, "A 0.99-to-4.38 uJ/class event-driven hybrid neural network processor for full-spectrum neural signal analyses," *IEEE Trans. Biomed. Circuits Syst.*, vol. 17, no. 3, pp. 598–609, Jun. 2023.

[24] A. Tavanaei, M. Ghodrati, S. R. Kheradpisheh, T. Masquelier, and A. Maida, "Deep learning in spiking neural networks," *Neural Netw.*, vol. 111, pp. 47–63, Mar. 2019.

[25] T. P. Lillicrap, D. Cownden, D. B. Tweed, and C. J. Akerman, "Random synaptic feedback weights support error backpropagation for deep learning," *Nature Commun.*, vol. 7, no. 1, 2016, Art. no. 13276.

[26] J. Launay, I. Poli, F. Boniface, and F. Krzakala, "Direct feedback alignment scales to modern deep learning tasks and architectures," in *Proc. Adv. Neural Inf. Process. Syst.*, vol. 33, 2020, pp. 9346–9360.

[27] D. Han, J. Lee, and H.-J. Yoo, "DF-LNPU: A pipelined direct feedback alignment-based deep neural network learning processor for fast online learning," *IEEE J. Solid-State Circuits*, vol. 56, no. 5, pp. 1630–1640, May 2021.

[28] J. Lee, R. Zhang, W. Zhang, Y. Liu, and P. Li, "Spike-train level direct feedback alignment: Sidestepping backpropagation for on-chip training of spiking neural nets," *Frontiers Neurosci.*, vol. 14, 2020, Art. no. 143.

[29] D. Lemire and M. E. O'Neill, "Xorshift1024*, xorshift1024+, xorshift128+ and xoroshiro128+ fail statistical tests for linearity," *J. Comput. Appl. Math.*, vol. 350, pp. 139–142, Apr. 2019.

[30] A. L. Goldberger et al., "PhysioBank, PhysioToolkit, and PhysioNet: Components of a new research resource for complex physiologic signals," *Circulation*, vol. 101, no. 23, pp. e215–e220, 2000.

[31] G. B. Moody and R. G. Mark, "The impact of the MIT-BIH arrhythmia database," *IEEE Eng. Med. Biol. Mag.*, vol. 20, no. 3, pp. 45–50, May/Jun. 2001.

[32] Y. Luo and S. Yu, "AILC: Accelerate on-chip incremental learning with compute-in-memory technology," *IEEE Trans. Comput.*, vol. 70, no. 8, pp. 1225–1238, Aug. 2021.

Shiqi Zhao (Member, IEEE) received the Ph.D. degree in electronic science and technology from Zhejiang University and Westlake University, in 2023. He is currently an Assistant Professor with the School of Computer and Communication Engineering, Northeastern University, China. His research interests include brain machine interface, energy-efficient deep learning algorithm, customized computer architecture design, and hardware implementation for bio-medical deep learning processors.

Chuanqing Wang (Student Member, IEEE) received the B.S. degree from Harbin engineering University, Harbin, China, in 2019. He is currently working toward the Ph.D. degree with the School of Engineering, Westlake University, Hangzhou, China. His research interests include retinal prosthesis, brain-inspired computing, and spiking neural network.

Chaoming Fang (Student Member, IEEE) received the B.S. degree in instrumentation science and technology from Beihang University, Beijing, China, in 2021. He joined the Center of Excellence in Biomedical Research on Advanced Integrated-on-chips Neurotechnologies (CenBRAIN Neurotech), School of Engineering, Westlake University, Hangzhou, China, in 2021, where he is currently working toward the Ph.D. degree. His research interests include energy-efficient processing algorithms and machine learning accelerator VLSI design for biomedical applications. He is currently working on the design for biosignal processor with reconfigurable on-chip learning and inference of neuromorphic computing.

Authorized licensed use limited to: Westlake University. Downloaded on March 29,2026 at 04:53:11 UTC from IEEE Xplore. Restrictions apply.

Fengshi Tian (Student Member, IEEE) received the B.Eng. degree in microelectronics science and engineering from Fudan University, Shanghai, China, in 2021. He is currently the Ph.D. Candidate with the ECE Department and AI Chip Center for Emerging Smart System (ACCESS), Hong Kong University of Science and Technology (HKUST), supervised by Prof. Kwang-Ting Tim Cheng and Prof. Chi-Ying Tsui. He was with the CenBRAIN Neurotech, Westlake University as a Visiting Student, from 2020 to 2021, supervised by Prof. Mohamad Sawan. His research interests include neuromorphic computing, application-specific intelligence-on-chip, and computing-in-memory systems. He is the recipient of several awards including the Best Paper Award at IEEE AICAS 2023.

Jie Yang (Member, IEEE) received the B.S. degree in electronic science and technology from Tianjin University, in 2010, and the Ph.D. degree in microelectronics from the Institute of Semiconductors, Chinese Academy of Sciences, in 2015. From 2015 to 2019, he was a Postdoctoral Fellow with the I2Sense Lab, Department of Electrical and Computer Engineering, University of Calgary, Canada. He is a Research Associate Professor with the School of Engineering, Westlake University. He joined with the CenBRAIN Neurotech, Westlake University, in 2019. His research interests include circuits and systems for intelligent biomedical applications, mixed-signal SoC for brain-machine interface, energy-efficient AI algorithms and VLSI architecture. He has designed different types of image, video signal processing chips, and image sensors chips under advanced technologies.

Mohamad Sawan (Fellow, IEEE) received the Ph.D. degree from the University of Sherbrooke, Canada. He is a Chair Professor with Westlake University, Hangzhou, China, and an Emeritus Professor with Polytechnique Montreal, Canada. He is the Founder and the Director of the Center of Excellence in Biomedical Research on Advances-on-Chips Neurotechnologies (CenBRAIN Neurotech) with Westlake University, and of the Polystim Neurotech Lab in Polytechnique Montreal. He served as a Distinguished Lecturer of both CASS and SSCS for three consecutive years each. He is a Co-Founder, an Associate Editor and was an Editor-in-Chief of IEEE TRANSACTIONS ON BIOMEDICAL CIRCUITS AND SYSTEMS (2016–2019). He published more than 1000 peer-reviewed papers, one Handbook, three books, 13 book chapters, 12 patents, and 20 other patents are pending. He was awarded the Canada Research Chair in Smart Medical Devices (2001–2015), and was leading the Microsystems Strategic Alliance of Quebec (ReSMiQ), Canada (1999–2018). He received several awards, among them the Barbara Turnbull Award from the Canadian Institutes of Health Research (CIHR), the J.A. Bombardier and Jacques-Rousseau Awards from the Canadian ACFAS, the Queen Elizabeth II Golden Jubilee Medal, the Medal of Merit from the President of Lebanon, the Shanghai International Collaboration Award. He is a fellow of the Royal Society of Sciences of Canada (FRSC), a fellow of the Canadian Academy of Engineering (FCAE), a fellow of the Engineering Institutes of Canada (FEIC), a fellow of the Asia-Pacific Artificial Intelligence Association (FAAIA), and an "Officer" of the National Order of Quebec.

Authorized licensed use limited to: Westlake University. Downloaded on March 29,2026 at 04:53:11 UTC from IEEE Xplore. Restrictions apply.